APPENDIX D – WELL CONSTRUCTION LOGS

WATERLOO INSTALLATION LOG

GZA GEOENVIRONMENTAL OF NEW YORK
440 NINTH AVENUE, 18th FLOOR
NEW YORK, NEW YORK 10001
SCIENTISTS AND ENGINEERS

Client
Entergy
Indian Point Energy Center
Buchanan, NY

WELL ID	MW-30
SHEET	1 of 1
FILE NO.	41.0017869.01
PROJECT LOCATION	Indian Point Energy Center

GZA ENGINEER:	Steve Kline	DEPTH TO BOTTOM:	85.4	ft below top of casing
CONTRACTOR:	Solinst	DEPTH TO WATER:	Refer to Table 6.1	ft below top of casing
CONTRACTOR REP:	Bruce Blackburn	GROUND ELEVATION	77.5	NGVD 29
DATE START/ END:	8/3/2006, 2/22/07, 3/16/07	CASING ELEVATION	75.66	NGVD 29

Transducers

Zone	Serial #	Diaphragm Depth (ft below casing)	Diaphragm Elevation (m.s.l.)	Pressure Range (psi)	Linear Gage Factor (G)	Thermal Factor (K)	Accuracy (+/- ft H20)
69	06-3131	68.8	6.9	10	0.003612	0.013585	0.023
71	06-3132	70.3	5.4	10	0.003603	0.012491	0.023
82	06-3134	81.8	-6.1	10	0.003799	0.014016	0.023
84	06-3135	83.3	-7.6	10	0.003241	0.004153	0.023

Factory Zero Transducer Readings

Zone	Serial #	Date	Frequency Reading	Temp (ºC)	Barometric Pressure (ft H20)
69	06-3131	07/10/06	9246.0	25.2	33.2
71	06-3132	07/10/06	9318.0	25.6	33.2
82	06-3134	07/10/06	9111.0	24.6	33.2
84	06-3135	07/10/06	9294.0	25.2	33.2

Wellhead Zero Readings

Zone	Serial #	Date	Time of Reading	Frequency Reading	Temp (ºC)	Barometric Pressure (ft H20)	Time of Baro Reading
69	06-3131	08/04/06	9:35	9212.2	22.7		
71	06-3132	08/04/06	10:15	9277.5	23.5		
82	06-3134	08/04/06	9:05	9080.1	22.8		
84	06-3135	08/04/06	9:10	9267.3	22.9		

Post-Installation (Pre-Inflation) Transducer Readings

Zone	Serial #	Date	Time of Reading	Frequency Reading	Temp (ºC)	Barometric Pressure (ft H20)	Time of Baro Reading
69	06-3131	08/04/06	15:38	8472.5	24.3		
71	06-3132	08/04/06	15:40	8361.8	23.7		
82	06-3134	08/04/06	15:35	6905.5	23.1		
84	06-3135	08/04/06	15:37	6519.2	23.0		

Notes

1. All depths and measurements referenced to the final top of well casing.
2. This log depicts adjustments made to original waterloo system installed on 8/3/06.
   Adjustments are listed below:
3. Steel well casing cut 2.39' on 2/22/06. Top 1 foot and 2 foot sections of PVC removed.
4. Manifold installed and an additional 2 foot section of pvc removed on 3/16/07.
5. On 3/7/07 DTW in PVC riser was 1.1 foot from top of steel casing.
6. On 3/7/07 DTW between steel casing and PVC riser was 30.76 feet from top of steel casing.
7. 2-foot by 2-foot by 2-foot well vault installed within concrete, flush with ground surface.

DEPTH to Top of Component (FT)	Dsitance Above Bottom (FT)	Elevation of Top of Component (FT)	Waterloo Component
0.3	85.1	75.4	1 ft casing
1.3	84.1	74.4	5 ft casing
6.3	79.1	69.4	5 ft casing
11.3	74.1	64.4	5 ft casing
16.3	69.1	59.4	5 ft casing
21.3	64.1	54.4	5 ft casing
26.3	59.1	49.4	5 ft casing
31.3	54.1	44.4	PACKER
34.3	51.1	41.4	PACKER
37.3	48.1	38.4	5 ft casing
42.3	43.1	33.4	PACKER
45.3	40.1	30.4	PACKER
48.3	37.1	27.4	2 ft casing
50.3	35.1	25.4	2 ft casing
52.3	33.1	23.4	PACKER
55.3	30.1	20.4	PACKER
58.3	27.1	17.4	1 ft casing
59.3	26.1	16.4	2 ft casing
61.3	24.1	14.4	PACKER
64.3	21.1	11.4	PACKER
67.3	18.1	8.4	2 ft casing
69.3	16.1	6.4	PORT 69
69.8	15.6	5.9	1 ft casing
70.8	14.6	4.9	PORT 71
71.3	14.1	4.4	PACKER
74.3	11.1	1.4	PACKER
77.3	8.1	-1.6	5 ft casing
82.3	3.1	-6.6	PORT 82
82.8	2.6	-7.1	1 ft casing
83.8	1.6	-8.1	PORT 84
84.3	1.1	-8.6	1 ft casing
85.3	0.1	-9.6	SS Plug

WATERLOO INSTALLATION LOG

GZA GEOENVIRONMENTAL OF NEW YORK
440 NINTH AVENUE, 18th FLOOR
NEW YORK, NEW YORK 10001
SCIENTISTS AND ENGINEERS

Client
Entergy
Indian Point Energy Center
Buchanan, NY

WELL ID	MW-31
SHEET	1 of 1
FILE NO.	41.0017869.01
PROJECT LOCATION	Indian Point Energy Center

GZA ENGINEER:	Steve Kline	DEPTH TO BOTTOM:	85.40	ft below top of casing
CONTRACTOR:	Solinst	DEPTH TO WATER:	Refer to Table 6.1	ft below top of casing
CONTRACTOR REP:	Bruce Blackburn	GROUND ELEVATION	77.45	NGVD 29
DATE START/ END:	9/21/2006	CASING ELEVATION	75.64	NGVD 29

Transducers

Zone	Serial #	Diaphragm Depth (ft below casing)	Diaphragm Elevation (m.s.l.)	Pressure Range (psi)	Linear Gage Factor (G)	Thermal Factor (K)	Accuracy (+/- ft H20)
49	06-4229	48.3	27.3	10	0.003704	0.013618	0.023
63	06-11472	63.0	12.6	50	0.015900	0.009250	0.115
85	06-11473	84.5	-8.9	50	0.014710	0.023900	0.115

Factory Zero Transducer Readings

Zone	Serial #	Date	Frequency Reading	Temp (ºC)	Barometric Pressure (ft H20)
49	06-4229	08/04/06	9230.0	25.6	33.1
63	06-11472	08/04/06	9163.0	24.2	33.1
85	06-11473	08/04/06	9048.0	24.5	33.1

Wellhead Zero Readings

Zone	Serial #	Date	Time of Reading	Frequency Reading	Temp (ºC)	Barometric Pressure (ft H20)	Time of Baro Reading
49	06-4229	09/21/06	7:55	9106.3	18.7		
63	06-11472	09/21/06	7:57	9149.0	18.4		
85	06-11473	09/21/06	7:56	9028.3	18.7		

Post-Installation (Pre-Inflation) Transducer Readings

Zone	Serial #	Date	Time of Reading	Frequency Reading	Temp (ºC)	Barometric Pressure (ft H20)	Time of Baro Reading
49	06-4229	09/21/06	14:30	6757.0	18.4		
63	06-11472	09/21/06	14:25	8205.8	18.1		
85	06-11473	09/21/06	14:26	7376.5	17.7		

Notes

1. All depths and measurements referenced to the final top of well casing.
2. 2-foot by 2-foot by 2-foot well vault installed within concrete, flush with ground surface.

DEPTH to Top of Component (FT)	Dsitance Above Bottom (FT)	Elevation of Top of Component (FT)	Waterloo Component
-0.2	85.6	75.8	5 ft casing
4.8	80.6	70.8	5 ft casing
9.8	75.6	65.8	PACKER
12.8	72.6	62.8	2 ft casing
14.8	70.6	60.8	PACKER
17.8	67.6	57.8	1 ft casing
18.8	66.6	56.8	2 ft casing
20.8	64.6	54.8	5 ft casing
25.8	59.6	49.8	PACKER
28.8	56.6	46.8	PACKER
31.8	53.6	43.8	PACKER
34.8	50.6	40.8	2 ft casing
36.8	48.6	38.8	2 ft casing
38.8	46.6	36.8	5 ft casing
43.8	41.6	31.8	5 ft casing
48.8	36.6	26.8	PORT 49
49.3	36.1	26.3	PACKER
52.3	33.1	23.3	PACKER
55.3	30.1	20.3	1 ft casing
56.3	29.1	19.3	2 ft casing
58.3	27.1	17.3	5 ft casing
63.3	22.1	12.3	PORT 63
63.8	21.6	11.8	PACKER
66.8	18.6	8.8	PACKER
69.8	15.6	5.8	5 ft casing
74.8	10.6	0.8	5 ft casing
79.8	5.6	-4.2	5 ft casing
84.8	0.6	-9.2	PORT 85
85.3	0.1	-9.7	SS Plug

WATERLOO INSTALLATION LOG

GZA GEOENVIRONMENTAL OF NEW YORK
440 NINTH AVENUE, 18th FLOOR
NEW YORK, NEW YORK 10001
SCIENTISTS AND ENGINEERS

Client
Entergy
Indian Point Energy Center
Buchanan, NY

WELL ID	MW-32
SHEET	1 of 1
FILE NO.	41.0017869.01
PROJECT LOCATION	Indian Point Energy Center

GZA ENGINEER:	S. Kline	DEPTH TO BOTTOM:	193.92	ft below top of casing
CONTRACTOR:	none	DEPTH TO WATER:	Refer to Table 6.1	ft below top of casing
CONTRACTOR REP:	none	GROUND ELEVATION	78.90	NGVD 29
DATE START/ END:	9/10/2007 - 9/10/2007	CASING ELEVATION	77.13	NGVD 29

Transducers

Zone	Serial #	Diaphragm Depth (ft below casing)	Diaphragm Elevation (m.s.l.)	Pressure Range (psi)	Linear Gage Factor (G)	Thermal Factor (K)	Accuracy (+/- ft H20)
48	06-11474	48.0	29.1	50	0.016310	0.026440	0.115
59	06-11475	58.5	19.1	50	0.017020	0.022210	0.115
85	06-21926	85.0	-7.9	50	0.014980	-0.011570	0.115
131	06-11476	130.5	-53.4	50	0.017360	0.031670	0.115
149	07-13255	149.0	-71.9	50	0.015090	-0.017110	0.115
173	06-10514	172.5	-95.4	100	0.024000	0.043400	0.231
190	07-13830	190.0	-112.9	100	0.022570	-0.031020	0.231

Factory Zero Transducer Readings

Zone	Serial #	Date	Frequency Reading	Temp (°C)	Barometric Pressure (ft H20)
48	06-11474	08/04/06	9200.0	24.8	33.1
59	06-11475	08/04/06	9112.0	24.8	33.1
85	06-21926	11/29/06	8402.0	21.9	33.7
131	06-11476	08/04/06	9126.0	24.1	33.1
149	07-13255	07/16/07	8917.0	23.1	33.2
173	06-10514	08/04/06	8840.0	23.1	33.1
190	07-13830				

Wellhead Zero Readings

Zone	Serial #	Date	Time of Reading	Frequency Reading	Temp (ºC)	Barometric Pressure (ft H20)	Time of Baro Reading
48	06-11474	09/05/07	9:01	9177.1	19.8	34.04	8:30
59	06-11475	09/05/07	9:03	9088.3	20.1	34.04	8:30
85	06-21926	09/05/07	9:02	8418.8	19.7	34.04	8:30
131	06-11476	09/05/07	8:59	9043.4	19.6	34.04	8:30
149	07-13255	09/05/07	9:05	8912.8	19.7	34.04	8:30
173	06-10514	09/05/07	9:00	8807.9	19.6	34.04	8:30
190	07-13830	09/05/07	9:04	8944.8	19.9	34.04	8:30

Post-Installation (Pre-Inflation) Transducer Readings

Zone	Serial #	Date	Time of Reading	Frequency Reading	Temp (ºC)	Barometric Pressure (ft H20)	Time of Baro Reading
48	06-11474	09/10/07	14:20	8690.5	21.8	33.82	14:20
59	06-11475	09/10/07	14:19	8363.9	21.4	33.82	14:20
85	06-21926	09/10/07	14:18	6811.5	20.1	33.82	14:20
131	06-11476	09/10/07	14:17	6530.4	18.1	33.82	14:20
149	07-13255	09/10/07	14:15	5489.7	17.6	33.82	14:20
173	06-10514	09/10/07	14:16	6236.6	16.5	33.82	14:20
190	07-13830	09/10/07	14:21	5898.9	16.3	33.82	14:20

Notes

1. All depths and measurements referenced to the final top of well casing.
2. 2-foot by 2-foot by 2-foot well vault installed within concrete, flush with ground surface.

DEPTH to Top of Component (FT)	Dsitance Above Bottom (FT)	Elevation of Top of Component (FT)	Waterloo Component
-0.7	194.6	77.8	1 ft casing
0.3	193.6	76.8	2 ft casing
2.3	191.6	74.8	5 ft casing
7.3	186.6	69.8	5 ft casing
12.3	181.6	64.8	5 ft casing
17.3	176.6	59.8	5 ft casing
22.3	171.6	54.8	PACKER
25.3	168.6	51.8	PACKER
28.3	165.6	48.8	5 ft casing
33.3	160.6	43.8	5 ft casing
38.3	155.6	38.8	5 ft casing
43.3	150.6	33.8	5 ft casing
48.3	145.6	28.8	PORT 48
48.8	145.1	28.3	5 ft casing
53.8	140.1	23.3	5 ft casing
58.8	135.1	18.3	PORT 59
59.3	134.6	17.8	2 ft casing
61.3	132.6	15.8	PACKER
64.3	129.6	12.8	PACKER
67.3	126.6	9.8	PACKER
70.3	123.6	6.8	1 ft casing
71.3	122.6	5.8	2 ft casing
73.3	120.6	3.8	PACKER
76.3	117.6	0.8	PACKER
79.3	114.6	-2.2	1 ft casing
80.3	113.6	-3.2	5 ft casing
85.3	108.6	-8.2	PORT 85
85.8	108.1	-8.7	2 ft casing
87.8	106.1	-10.7	5 ft casing
92.8	101.1	-15.7	PACKER
95.8	98.1	-18.7	2 ft casing
97.8	96.1	-20.7	PACKER
100.8	93.1	-23.7	5 ft casing
105.8	88.1	-28.7	PACKER
108.8	85.1	-31.7	5 ft casing
113.8	80.1	-36.7	PACKER
116.8	77.1	-39.7	PACKER
119.8	74.1	-42.7	1 ft casing
120.8	73.1	-43.7	2 ft casing
122.8	71.1	-45.7	PACKER
125.8	68.1	-48.7	5 ft casing
130.8	63.1	-53.7	PORT 131
131.3	62.6	-54.2	2 ft casing
133.3	60.6	-56.2	5 ft casing
138.3	55.6	-61.2	PACKER
141.3	52.6	-64.2	PACKER
144.3	49.6	-67.2	PACKER
147.3	46.6	-70.2	2 ft casing
149.3	44.6	-72.2	PORT 149
149.8	44.1	-72.7	5 ft casing
154.8	39.1	-77.7	2 ft casing
156.8	37.1	-79.7	PACKER
159.8	34.1	-82.7	PACKER
162.8	31.1	-85.7	PACKER
165.8	28.1	-88.7	2 ft casing
167.8	26.1	-90.7	5 ft casing
172.8	21.1	-95.7	PORT 173
173.3	20.6	-96.2	1 ft casing
174.3	19.6	-97.2	PACKER
177.3	16.6	-100.2	PACKER
180.3	13.6	-103.2	5 ft casing
185.3	8.6	-108.2	5 ft casing
190.3	3.6	-113.2	PORT 190
190.8	3.1	-113.7	1 ft casing
191.8	2.1	-114.7	2 ft casing
193.8	0.1	-116.7	SS Plug

WATERLOO INSTALLATION LOG

GZA GEOENVIRONMENTAL OF NEW YORK 440 NINTH AVENUE, 18th FLOOR NEW YORK, NEW YORK 10001 SCIENTISTS AND ENGINEERS	Client Entergy Indian Point Energy Center Buchanan, NY	WELL ID: MW-39 SHEET: 1 of 1 FILE NO.: 41.0017869.01 PROJECT LOCATION: Indian Point Energy Center

GZA ENGINEER:	Steve Kline	DEPTH TO BOTTOM:	198.6 ft below top of casing
CONTRACTOR:	Solinst	DEPTH TO WATER:	Refer to Table 6.1 ft below top of casing
CONTRACTOR REP:	Bruce Blackburn	GROUND ELEVATION	81.83 NGVD 29
DATE START/ END:	4/23/07 - 4/24/07	CASING ELEVATION	79.99 NGVD 29

Transducers

Zone	Serial #	Diaphragm Depth (ft below casing)	Diaphragm Elevation (m.s.l.)	Pressure Range (psi)	Linear Gage Factor (G)	Thermal Factor (K)	Accuracy (+/- ft H20)
67	06-21925	66.7	13.3	50	0.014410	-0.011130	0.115
84	07-1143	83.0	-3.0	25	0.006901	0.001030	0.058
100	07-1144	99.5	-19.5	25	0.006780	0.004641	0.058
102	06-21920	101.2	-21.2	50	0.015610	-0.010340	0.115
124	07-6069	123.7	-43.7	50	0.015990	0.009080	0.115
183	07-6068	182.2	-102.2	50	0.014560	-0.020880	0.115
195	06-18344	194.7	-114.7	100	0.022620	0.004030	0.231

Factory Zero Transducer Readings

Zone	Serial #	Date	Frequency Reading	Temp (°C)	Barometric Pressure (ft H20)
67	06-21925	11/29/06	8263.0	23.1	33.7
84	07-1143	03/15/07	9674.0	23.2	33.0
100	07-1144	03/15/07	9554.0	23.1	33.0
102	06-21920	11/29/06	8107.0	23.7	33.7
124	07-6069	04/19/07	8724.0	23.1	33.2
183	07-6068	04/19/07	8834.0	23.0	33.2
195	06-18344	11/28/06	8825.0	22.2	33.7

Wellhead Zero Readings

Zone	Serial #	Date	Time of Reading	Frequency Reading	Temp (ºC)	Barometric Pressure (ft H20)	Time of Baro Reading
67	06-21925	04/23/07	14:30	8280.3	15.0	33.70	14:30
84	07-1143	04/23/07	14:30	9645.0	14.6	33.70	14:30
100	07-1144	04/23/07	14:30	9515.1	14.5	33.70	14:30
102	06-21920	04/23/07	14:30	8117.6	14.7	33.70	14:30
124	07-6069	04/24/07	13:00	8728.5	15.2	33.76	13:00
183	07-6068	04/24/07	9:15	8844.2	14.5	33.76	9:15
195	06-18344	04/23/07	14:30	8839.7	14.7	33.70	14:30

Post-Installation (Pre-Inflation) Transducer Readings

Zone	Serial #	Date	Time of Reading	Frequency Reading	Temp (ºC)	Barometric Pressure (ft H20)	Time of Baro Reading
67	06-21925	04/25/07	14:45	7750.0	15.7	33.87	15:00
84	07-1143	04/25/07	14:45	7541.5	14.0	33.87	15:00
100	07-1144	04/25/07	14:45	6318.5	14.1	33.87	15:00
102	06-21920	04/25/07	14:45	6681.5	14.3	33.87	15:00
124	07-6069	04/25/07	14:45	6721.5	14.1	33.87	15:00
183	07-6068	04/25/07	14:45	4890.4	13.7	33.87	15:00
195	06-18344	04/25/07	14:45	6075.0	14.0	33.87	15:00

Notes

1. All depths and measurements referenced to the final top of well casing.
2. Wellhead zero times are approximate within 15 minutes of actual readings.
3. 2-foot by 2-foot by 2-foot well vault installed within concrete, flush with ground surface.

DEPTH to Top of Component (FT)	Dsitance Above Bottom (FT)	Elevation of Top of Component (FT)	Waterloo Component
0.0	198.6	80.0	2 ft casing
2.0	196.6	78.0	5 ft casing
7.0	191.6	73.0	5 ft casing
12.0	186.6	68.0	5 ft casing
17.0	181.6	63.0	5 ft casing
22.0	176.6	58.0	5 ft casing
27.0	171.6	53.0	5 ft casing
32.0	166.6	48.0	5 ft casing
37.0	161.6	43.0	5 ft casing
42.0	156.6	38.0	5 ft casing
47.0	151.6	33.0	5 ft casing
52.0	146.6	28.0	5 ft casing
57.0	141.6	23.0	5 ft casing
62.0	136.6	18.0	**PACKER**
65.0	133.6	15.0	2 ft casing
67.0	131.6	13.0	**PORT 67**
67.5	131.1	12.5	1 ft casing
68.5	130.1	11.5	2 ft casing
70.5	128.1	9.5	**PACKER**
73.5	125.1	6.5	**PACKER**
76.5	122.1	3.5	5 ft casing
81.5	117.1	-1.5	2 ft casing
83.5	115.1	-3.5	**PORT 84**
84.0	114.6	-4.0	1 ft casing
85.0	113.6	-5.0	**PACKER**
88.0	110.6	-8.0	2 ft casing
90.0	108.6	-10.0	**PACKER**
93.0	105.6	-13.0	2 ft casing
95.0	103.6	-15.0	5 ft casing
100.0	98.6	-20.0	**PORT 100**
100.5	98.1	-20.5	1 ft casing
101.5	97.1	-21.5	**PORT 102**
102.0	96.6	-22.0	1 ft casing
103.0	95.6	-23.0	**PACKER**
106.0	92.6	-26.0	**PACKER**
109.0	89.6	-29.0	2 ft casing
111.0	87.6	-31.0	1 ft casing
112.0	86.6	-32.0	**PACKER**
115.0	83.6	-35.0	5 ft casing
120.0	78.6	-40.0	2 ft casing
122.0	76.6	-42.0	2 ft casing
124.0	74.6	-44.0	**PORT 124**
124.5	74.1	-44.5	2 ft casing
126.5	72.1	-46.5	**PACKER**
129.5	69.1	-49.5	2 ft casing
131.5	67.1	-51.5	2 ft casing
133.5	65.1	-53.5	**PACKER**
136.5	62.1	-56.5	2 ft casing
138.5	60.1	-58.5	5 ft casing
143.5	55.1	-63.5	5 ft casing
148.5	50.1	-68.5	**PACKER**
151.5	47.1	-71.5	5 ft casing
156.5	42.1	-76.5	5 ft casing
161.5	37.1	-81.5	**PACKER**
164.5	34.1	-84.5	2 ft casing
166.5	32.1	-86.5	**PACKER**
169.5	29.1	-89.5	1 ft casing
170.5	28.1	-90.5	2 ft casing
172.5	26.1	-92.5	5 ft casing
177.5	21.1	-97.5	5 ft casing
182.5	16.1	-102.5	**PORT 183**
183.0	15.6	-103.0	2 ft casing
185.0	13.6	-105.0	1 ft casing
186.0	12.6	-106.0	**PACKER**
189.0	9.6	-109.0	1 ft casing
190.0	8.6	-110.0	**PACKER**
193.0	5.6	-113.0	2 ft casing
195.0	3.6	-115.0	**PORT 195**
195.5	3.1	-115.5	2 ft casing
197.5	1.1	-117.5	1 ft casing
198.5	0.1	-118.5	SS Plug

WATERLOO INSTALLATION LOG

GZA GEOENVIRONMENTAL OF NEW YORK
440 NINTH AVENUE, 18th FLOOR
NEW YORK, NEW YORK 10001
SCIENTISTS AND ENGINEERS

Client
Entergy
Indian Point Energy Center
Buchanan, NY

WELL ID: MW-40
SHEET: 1 of 1
FILE NO.: 41.0017869.01
PROJECT LOCATION: Indian Point Energy Center

GZA ENGINEER: S. Kline
CONTRACTOR: Solinst
CONTRACTOR REP: Bruce Blackburn
DATE START/ END: 4/29/07 - 4/30/07

DEPTH TO BOTTOM: 190.3 ft below top of casing
DEPTH TO WATER: Refer to Table 6.1 ft below top of casing
GROUND ELEVATION: 74.95 NGVD 29
CASING ELEVATION: 73.16 NGVD 29

Transducers

Zone	Serial #	Diaphragm Depth (ft below casing)	Diaphragm Elevation (m.s.l.)	Pressure Range (psi)	Linear Gage Factor (G)	Thermal Factor (K)	Accuracy (+/- ft H20)
24	07-6072	23.9	49.3	50	0.017040	-0.009960	0.115
27	07-1780	26.2	47.0	10	0.002963	0.007921	0.023
46	07-1139	45.7	27.5	25	0.006850	0.001030	0.058
81	07-1140	80.2	-7.0	25	0.006912	0.001779	0.058
100	07-6070	99.9	-26.7	50	0.017250	-0.013670	0.115
127	07-6064	126.9	-53.7	50	0.015580	-0.015750	0.115
162	06-11953	161.4	-88.2	100	0.025060	-0.001410	0.231

Factory Zero Transducer Readings

Zone	Serial #	Date	Frequency Reading	Temp (°C)	Barometric Pressure (ft H20)
24	07-6072	04/19/07	8715.0	23.1	33.2
27	07-1780	03/29/07	9255.0	24.1	33.7
46	07-1139	03/15/07	9812.0	23.2	33.0
81	07-1140	03/15/07	9800.0	23.2	33.0
100	07-6070	04/19/07	8868.0	23.2	33.2
127	07-6064	04/19/07	8826.0	22.7	33.2
162	06-11953	09/13/06	8916.0	24.2	33.3

Wellhead Zero Readings

Zone	Serial #	Date	Time of Reading	Frequency Reading	Temp (ºC)	Barometric Pressure (ft H20)	Time of Baro Reading
24	07-6072	04/26/07	11:36	8712.2	12.1	34.10	11:40
27	07-1780	04/27/07	7:50	9218.4	11.4	33.82	8:00
46	07-1139	04/26/07	11:25	9754.7	12.2	34.10	11:40
81	07-1140	04/26/07	11:43	9782.4	11.0	34.10	11:40
100	07-6070	04/27/07	7:55	8877.1	11.4	33.82	8:00
127	07-6064	04/26/07	11:40	8833.0	12.1	34.10	11:40
162	06-11953	04/26/07	11:32	8913.9	12.2	34.10	11:40

Post-Installation (Pre-Inflation) Transducer Readings

Zone	Serial #	Date	Time of Reading	Frequency Reading	Temp (ºC)	Barometric Pressure (ft H20)	Time of Baro Reading
24	07-6072	04/30/07	13:45	8401.1	12.8	33.48	14:00
27	07-1780	04/30/07	13:44	7080.8	13.0	33.48	14:00
46	07-1139	04/30/07	13:46	7625.3	13.6	33.48	14:00
81	07-1140	04/30/07	13:43	5440.8	13.3	33.48	14:00
100	07-6070	04/30/07	13:41	6659.6	13.3	33.48	14:00
127	07-6064	04/30/07	13:40	5634.9	12.2	33.48	14:00
162	06-11953	04/30/07	13:39	6341.4	12.1	33.48	14:00

Notes

1. All depths and measurements referenced to the final top of well casing.
2. 2-foot by 2-foot by 2-foot well vault installed within concrete, flush with ground surface.

DEPTH to Top of Component (FT)	Dsitance Above Bottom (FT)	Elevation of Top of Component (FT)	Waterloo Component
-0.8	191.1	73.2	1 ft casing
0.2	190.1	73.0	5 ft casing
5.2	185.1	68.0	5 ft casing
10.2	180.1	63.0	5 ft casing
15.2	175.1	58.0	PACKER
18.2	172.1	55.0	1 ft casing
19.2	171.1	54.0	5 ft casing
24.2	166.1	49.0	PORT 24
24.7	165.6	48.5	2 ft casing
26.7	163.6	46.5	PORT 27
27.2	163.1	46.0	1 ft casing
28.2	162.1	45.0	2 ft casing
30.2	160.1	43.0	5 ft casing
35.2	155.1	38.0	PACKER
38.2	152.1	35.0	1 ft casing
39.2	151.1	34.0	2 ft casing
41.2	149.1	32.0	PACKER
44.2	146.1	29.0	2 ft casing
46.2	144.1	27.0	PORT 46
46.7	143.6	26.5	2 ft casing
48.7	141.6	24.5	5 ft casing
53.7	136.6	19.5	PACKER
56.7	133.6	16.5	5 ft casing
61.7	128.6	11.5	PACKER
64.7	125.6	8.5	1 ft casing
65.7	124.6	7.5	5 ft casing
70.7	119.6	2.5	5 ft casing
75.7	114.6	-2.5	5 ft casing
80.7	109.6	-7.5	PORT 81
81.2	109.1	-8.0	1 ft casing
82.2	108.1	-9.0	2 ft casing
84.2	106.1	-11.0	PACKER
87.2	103.1	-14.0	1 ft casing
88.2	102.1	-15.0	2 ft casing
90.2	100.1	-17.0	PACKER
93.2	97.1	-20.0	2 ft casing
95.2	95.1	-22.0	5 ft casing
100.2	90.1	-27.0	PORT 100
100.7	89.6	-27.5	1 ft casing
101.7	88.6	-28.5	5 ft casing
106.7	83.6	-33.5	PACKER
109.7	80.6	-36.5	1 ft casing
110.7	79.6	-37.5	PACKER
113.7	76.6	-40.5	1 ft casing
114.7	75.6	-41.5	2 ft casing
116.7	73.6	-43.5	PACKER
119.7	70.6	-46.5	0.5 ft casing
120.2	70.1	-47.0	2 ft casing
122.2	68.1	-49.0	PACKER
125.2	65.1	-52.0	2 ft casing
127.2	63.1	-54.0	PORT 127
127.7	62.6	-54.5	2 ft casing
129.7	60.6	-56.5	2 ft casing
131.7	58.6	-58.5	5 ft casing
136.7	53.6	-63.5	PACKER
139.7	50.6	-66.5	2 ft casing
141.7	48.6	-68.5	2 ft casing
143.7	46.6	-70.5	PACKER
146.7	43.6	-73.5	1 ft casing
147.7	42.6	-74.5	2 ft casing
149.7	40.6	-76.5	PACKER
152.7	37.6	-79.5	1 ft casing
153.7	36.6	-80.5	2 ft casing
155.7	34.6	-82.5	PACKER
158.7	31.6	-85.5	1 ft casing
159.7	30.6	-86.5	2 ft casing
161.7	28.6	-88.5	PORT 162
162.2	28.1	-89.0	1 ft casing
163.2	27.1	-90.0	2 ft casing
165.2	25.1	-92.0	5 ft casing
170.2	20.1	-97.0	5 ft casing
175.2	15.1	-102.0	5 ft casing
180.2	10.1	-107.0	5 ft casing
185.2	5.1	-112.0	5 ft casing
190.2	0.1	-117.0	SS Plug

WATERLOO INSTALLATION LOG

GZA GEOENVIRONMENTAL OF NEW YORK
440 NINTH AVENUE, 18th FLOOR
NEW YORK, NEW YORK 10001
SCIENTISTS AND ENGINEERS

Client
Entergy
Indian Point Energy Center
Buchanan, NY

WELL ID: MW-51
SHEET: 1 of 1
FILE NO.: 41.0017869.01
PROJECT LOCATION: Indian Point Energy Center

GZA ENGINEER: Steve Kline
CONTRACTOR: Solinst
CONTRACTOR REP: Bruce Blackburn
DATE START/ END: 5/1/2007 - 5/2/2007

DEPTH TO BOTTOM: 197.8 ft below top of casing
DEPTH TO WATER: Refer to Table 6.1 ft below top of casing
GROUND ELEVATION: 69.64 NGVD 29
CASING ELEVATION: 67.72 NGVD 29

Transducers

Zone	Serial #	Diaphragm Depth (ft below casing)	Diaphragm Elevation (m.s.l.)	Pressure Range (psi)	Linear Gage Factor (G)	Thermal Factor (K)	Accuracy (+/- ft H20)
40	07-6074	39.4	28.3	50	0.014270	-0.023440	0.115
79	07-1138	78.2	-10.5	25	0.006531	0.006556	0.058
102	07-6066	101.9	-34.2	50	0.014060	-0.029010	0.115
104	07-7334	103.4	-35.7	50	0.015510	-0.014410	0.115
135	07-7333	134.9	-67.2	50	0.014990	-0.018580	0.115
163	07-5859	162.4	-94.7	100	0.026690	-0.005080	0.231
189	07-5860	188.9	-121.2	100	0.026820	0.006180	0.231

Factory Zero Transducer Readings

Zone	Serial #	Date	Frequency Reading	Temp (ºC)	Barometric Pressure (ft H20)
40	07-6074	04/19/07	8843.0	23.4	33.2
79	07-1138	03/15/07	9668.0	22.9	33.0
102	07-6066	04/19/07	8720.0	22.5	33.2
104	07-7334	04/27/07	8682.0	22.4	33.2
135	07-7333	04/27/07	8630.0	22.5	33.2
163	07-5859	04/27/07	8929.0	21.0	33.2
189	07-5860	04/27/07	8567.0	21.2	33.2

Wellhead Zero Readings

Zone	Serial #	Date	Time of Reading	Frequency Reading	Temp (ºC)	Barometric Pressure (ft H20)	Time of Baro Reading
40	07-6074	05/01/07	10:10	8855.0	11.5	33.82	10:10
79	07-1138	05/01/07	10:10	9612.0	11.1	33.82	10:10
102	07-6066	05/01/07	13:00	8734.7	12.7	33.87	13:00
104	07-7334	05/01/07	10:10	8688.9	11.1	33.82	10:10
135	07-7333	05/01/07	10:10	8640.9	11.3	33.82	10:10
163	07-5859	05/01/07	10:10	8930.1	11.3	33.82	10:10
189	07-5860	05/01/07	10:10	8562.6	11.1	33.82	10:10

Post-Installation (Pre-Inflation) Transducer Readings

Zone	Serial #	Date	Time of Reading	Frequency Reading	Temp (ºC)	Barometric Pressure (ft H20)	Time of Baro Reading
40	07-6074	05/02/07	9:41	8308.7	11.9	33.76	9:45
79	07-1138	05/02/07	9:42	5851.9	11.9	33.76	9:45
102	07-6066	05/02/07	9:40	6248.0	12.1	33.76	9:45
104	07-7334	05/02/07	9:37	6396.5	11.9	33.76	9:45
135	07-7333	05/02/07	9:38	5361.0	11.8	33.76	9:45
163	07-5859	05/02/07	9:44	6660.2	11.5	33.76	9:45
189	07-5860	05/02/07	9:43	5866.1	11.4	33.76	9:45

Notes

1. All depths and measurements referenced to the final top of well casing.
2. Wellhead zero times are approximate within 15 minutes of actual readings.
3. 2-foot by 2-foot by 2-foot well vault installed within concrete, flush with ground surface.

DEPTH to Top of Component (FT)	Dsitance Above Bottom (FT)	Elevation of Top of Component (FT)	Waterloo Component
-0.1	197.9	67.8	2 ft casing
1.7	196.1	66.0	5 ft casing
6.7	191.1	61.0	5 ft casing
11.7	186.1	56.0	5 ft casing
16.7	181.1	51.0	5 ft casing
21.7	176.1	46.0	5 ft casing
26.7	171.1	41.0	PACKER
29.7	168.1	38.0	5 ft casing
34.7	163.1	33.0	5 ft casing
39.7	158.1	28.0	PORT 40
40.2	157.6	27.5	2 ft casing
42.2	155.6	25.5	2 ft casing
44.2	153.6	23.5	PACKER
47.2	150.6	20.5	2 ft casing
49.2	148.6	18.5	2 ft casing
51.2	146.6	16.5	PACKER
54.2	143.6	13.5	1 ft casing
55.2	142.6	12.5	5 ft casing
60.2	137.6	7.5	PACKER
63.2	134.6	4.5	0.5 ft casing
63.7	134.1	4.0	5 ft casing
68.7	129.1	-1.0	5 ft casing
73.7	124.1	-6.0	5 ft casing
78.7	119.1	-11.0	PORT 79
79.2	118.6	-11.5	2 ft casing
81.2	116.6	-13.5	PACKER
84.2	113.6	-16.5	2 ft casing
86.2	111.6	-18.5	2 ft casing
88.2	109.6	-20.5	PACKER
91.2	106.6	-23.5	2 ft casing
93.2	104.6	-25.5	2 ft casing
95.2	102.6	-27.5	PACKER
98.2	99.6	-30.5	PACKER
101.2	96.6	-33.5	1 ft casing
102.2	95.6	-34.5	PORT 102
102.7	95.1	-35.0	1 ft casing
103.7	94.1	-36.0	PORT 104
104.2	93.6	-36.5	2 ft casing
106.2	91.6	-38.5	5 ft casing
111.2	86.6	-43.5	PACKER
114.2	83.6	-46.5	PACKER
117.2	80.6	-49.5	2 ft casing
119.2	78.6	-51.5	1 ft casing
120.2	77.6	-52.5	PACKER
123.2	74.6	-55.5	2 ft casing
125.2	72.6	-57.5	2 ft casing
127.2	70.6	-59.5	PACKER
130.2	67.6	-62.5	5 ft casing
135.2	62.6	-67.5	PORT 135
135.7	62.1	-68.0	1 ft casing
136.7	61.1	-69.0	2 ft casing
138.7	59.1	-71.0	5 ft casing
143.7	54.1	-76.0	PACKER
146.7	51.1	-79.0	PACKER
149.7	48.1	-82.0	2 ft casing
151.7	46.1	-84.0	PACKER
154.7	43.1	-87.0	1 ft casing
155.7	42.1	-88.0	2 ft casing
157.7	40.1	-90.0	5 ft casing
162.7	35.1	-95.0	PORT 163
163.2	34.6	-95.5	2 ft casing
165.2	32.6	-97.5	1 ft casing
166.2	31.6	-98.5	PACKER
169.2	28.6	-101.5	2 ft casing
171.2	26.6	-103.5	1 ft casing
172.2	25.6	-104.5	PACKER
175.2	22.6	-107.5	2 ft casing
177.2	20.6	-109.5	1 ft casing
178.2	19.6	-110.5	PACKER
181.2	16.6	-113.5	PACKER
184.2	13.6	-116.5	5 ft casing
189.2	8.6	-121.5	PORT 189
189.7	8.1	-122.0	1 ft casing
190.7	7.1	-123.0	2 ft casing
192.7	5.1	-125.0	5 ft casing
197.7	0.1	-130.0	SS Plug

WATERLOO INSTALLATION LOG

GZA GEOENVIRONMENTAL OF NEW YORK 440 NINTH AVENUE, 18th FLOOR NEW YORK, NEW YORK 10001 SCIENTISTS AND ENGINEERS	Client Entergy Indian Point Energy Center Buchanan, NY	WELL ID: MW-52 SHEET: 1 of 1 FILE NO.: 41.0017869.01 PROJECT LOCATION: Indian Point Energy Center

GZA ENGINEER:	Steve Kline	DEPTH TO BOTTOM:	198.1 ft below top of casing
CONTRACTOR:	Solinst	DEPTH TO WATER:	Refer to Table 6.1 ft below top of casing
CONTRACTOR REP:	Bruce Blackburn	GROUND ELEVATION	16.77 NGVD 29
DATE START/ END:	5/3/2007 - 5/4/2007	CASING ELEVATION	14.92 NGVD 29

Transducers

Zone	Serial #	Diaphragm Depth (ft below casing)	Diaphragm Elevation (m.s.l.)	Pressure Range (psi)	Linear Gage Factor (G)	Thermal Factor (K)	Accuracy (+/- ft H20)
18	07-6071	17.2	-2.3	50	0.014290	-0.017510	0.115
48	07-1145	47.5	-32.6	25	0.006677	0.003201	0.058
64	07-6073	63.7	-48.8	50	0.016140	-0.017960	0.115
118	06-16304	117.2	-102.3	50	0.013620	-0.014710	0.115
122	07-6065	121.7	-106.8	50	0.015720	-0.007590	0.115
162	07-5862	161.2	-146.3	100	0.026460	0.000490	0.231
181	07-5861	180.7	-165.8	100	0.026080	0.000450	0.231

Factory Zero Transducer Readings

Zone	Serial #	Date	Frequency Reading	Temp (°C)	Barometric Pressure (ft H20)
18	07-6071	04/19/07	8853.0	23.3	33.2
48	07-1145	03/15/07	9508.0	23.4	33.0
64	07-6073	04/19/07	8519.0	23.0	33.2
118	06-16304	09/13/06	8741.0	23.2	33.4
122	07-6065	04/19/07	8947.0	22.7	33.2
162	07-5862	04/27/07	8662.0	21.3	33.2
181	07-5861	04/27/07	8682.0	21.3	33.2

Wellhead Zero Readings

Zone	Serial #	Date	Time of Reading	Frequency Reading	Temp (ºC)	Barometric Pressure (ft H20)	Time of Baro Reading
18	07-6071	05/03/07	8:15	8844.3	14.9	34.21	8:37
48	07-1145	05/03/07	8:15	9438.0	14.7	34.21	8:37
64	07-6073	05/03/07	8:15	8516.9	14.0	34.21	8:37
118	06-16304	05/03/07	8:15	8734.9	15.3	34.21	8:37
122	07-6065	05/03/07	8:15	8938.4	15.2	34.21	8:37
162	07-5862	05/03/07	8:15	8653.6	14.6	34.21	8:37
181	07-5861	05/03/07	8:15	8671.5	14.8	34.21	8:37

Post-Installation (Pre-Inflation) Transducer Readings

Zone	Serial #	Date	Time of Reading	Frequency Reading	Temp (ºC)	Barometric Pressure (ft H20)	Time of Baro Reading
18	07-6071	05/04/07	10:00	8574.3	14.4	34.27	10:00
48	07-1145	05/04/07	10:00	6850.9	16.1	34.27	10:00
64	07-6073	05/04/07	10:00	7025.7	16.0	34.27	10:00
118	06-16304	05/04/07	10:00	5277.5	15.0	34.27	10:00
122	07-6065	05/04/07	10:00	5821.0	14.6	34.27	10:00
162	07-5862	05/04/07	10:00	6163.5	13.9	34.27	10:00
181	07-5861	05/04/07	10:00	5821.4	13.7	34.27	10:00

Notes

1. All depths and measurements referenced to top of well casing.
2. Wellhead zero times and Post-Installation reading times are approximate within 15 minutes of actual readings.
3. 2-foot by 2-foot by 2-foot well vault installed within concrete, flush with ground surface.

DEPTH to Top of Component (FT)	Distance Above Bottom (FT)	Elevation of Top of Component (FT)	Waterloo Component
0.0	198.1	14.9	0.5 ft casing
0.5	197.6	14.4	2 ft casing
2.5	195.6	12.4	5 ft casing
7.5	190.6	7.4	5 ft casing
12.5	185.6	2.4	5 ft casing
17.5	180.6	-2.6	**PORT 18**
18.0	180.1	-3.1	2 ft casing
20.0	178.1	-5.1	5 ft casing
25.0	173.1	-10.1	5 ft casing
30.0	5.1	-15.1	**PACKER**
33.0	5.1	-18.1	**PACKER**
36.0	162.1	-21.1	2 ft casing
38.0	160.1	-23.1	2 ft casing
40.0	5.1	-25.1	**PACKER**
43.0	155.1	-28.1	2 ft casing
45.0	5.1	-30.1	**PACKER**
48.0	150.1	-33.1	**PORT 48**
48.5	149.6	-33.6	0.5 ft casing
49.0	149.1	-34.1	2 ft casing
51.0	147.1	-36.1	5 ft casing
56.0	5.1	-41.1	**PACKER**
59.0	139.1	-44.1	5 ft casing
64.0	134.1	-49.1	**PORT 64**
64.5	133.6	-49.6	2 ft casing
66.5	131.6	-51.6	5 ft casing
71.5	5.1	-56.6	**PACKER**
74.5	123.6	-59.6	5 ft casing
79.5	118.6	-64.6	5 ft casing
84.5	5.1	-69.6	**PACKER**
87.5	110.6	-72.6	2 ft casing
89.5	108.6	-74.6	2 ft casing
91.5	5.1	-76.6	**PACKER**
94.5	103.6	-79.6	5 ft casing
99.5	5.1	-84.6	**PACKER**
102.5	95.6	-87.6	1 ft casing
103.5	5.1	-88.6	**PACKER**
106.5	91.6	-91.6	1 ft casing
107.5	5.1	-92.6	**PACKER**
110.5	87.6	-95.6	2 ft casing
112.5	85.6	-97.6	5 ft casing
117.5	80.6	-102.6	**PORT 118**
118.0	80.1	-103.1	2 ft casing
120.0	78.1	-105.1	2 ft casing
122.0	76.1	-107.1	**PORT 122**
122.5	75.6	-107.6	1 ft casing
123.5	5.1	-108.6	**PACKER**
126.5	71.6	-111.6	2 ft casing
128.5	5.1	-113.6	**PACKER**
131.5	66.6	-116.6	5 ft casing
136.5	5.1	-121.6	**PACKER**
139.5	58.6	-124.6	2 ft casing
141.5	56.6	-126.6	2 ft casing
143.5	5.1	-128.6	**PACKER**
146.5	51.6	-131.6	5 ft casing
151.5	5.1	-136.6	**PACKER**
154.5	43.6	-139.6	2 ft casing
156.5	41.6	-141.6	5 ft casing
161.5	36.6	-146.6	**PORT 162**
162.0	36.1	-147.1	2 ft casing
164.0	5.1	-149.1	**PACKER**
167.0	31.1	-152.1	1 ft casing
168.0	5.1	-153.1	**PACKER**
171.0	27.1	-156.1	5 ft casing
176.0	22.1	-161.1	5 ft casing
181.0	17.1	-166.1	**PORT 181**
181.5	16.6	-166.6	0.5 ft casing
182.0	16.1	-167.1	1 ft casing
183.0	15.1	-168.1	5 ft casing
188.0	10.1	-173.1	5 ft casing
193.0	5.1	-178.1	5 ft casing
198.0	0.1	-183.1	SS Plug

WATERLOO INSTALLATION LOG

GZA GEOENVIRONMENTAL OF NEW YORK
440 NINTH AVENUE, 18th FLOOR
NEW YORK, NEW YORK 10001
SCIENTISTS AND ENGINEERS

Client
Entergy
Indian Point Energy Center
Buchanan, NY

WELL ID	MW-54
SHEET	1 of 1
FILE NO.	41.0017869.01
PROJECT LOCATION	Indian Point Energy Center

GZA ENGINEER:	Steve Kline	DEPTH TO BOTTOM:	203.4	ft below top of casing
CONTRACTOR:	Solinst	DEPTH TO WATER:	Refer to Table 6.1	ft below top of casing
CONTRACTOR REP:	Bruce Blackburn	GROUND ELEVATION	14.99	NGVD 29
DATE START/ END:	4/11/07 - 4/12/07	CASING ELEVATION	13.09	NGVD 29

Transducers

Zone	Serial #	Diaphragm Depth (ft below casing)	Diaphragm Elevation (m.s.l.)	Pressure Range (psi)	Linear Gage Factor (G)	Thermal Factor (K)	Accuracy (+/- ft H20)
35	06-21917	34.7	-21.6	50	0.014290	-0.012560	0.115
37	06-21927	36.2	-23.1	50	0.014840	-0.022630	0.115
58	06-21921	57.2	-44.1	50	0.015730	-0.012130	0.115
123	07-2297	122.7	-109.6	50	0.018110	-0.007000	0.115
144	06-21918	143.7	-130.6	50	0.015848	-0.020260	0.115
173	07-2555	172.2	-159.1	100	0.026890	-0.000810	0.231
190	06-18345	189.7	-176.6	100	0.022620	-0.007920	0.231

Factory Zero Transducer Readings

Zone	Serial #	Date	Frequency Reading	Temp (°C)	Barometric Pressure (ft H20)
35	06-21917	11/29/06	8144.0	24.2	33.7
37	06-21927	11/29/06	8464.0	22.6	33.7
58	06-21921	11/29/06	8089.0	22.6	33.7
123	07-2297	03/15/07	8537.0	22.7	33.2
144	06-21918	11/29/06	8540.0	23.3	33.7
173	07-2555	03/14/07	8721.0	23.1	33.2
190	06-18345	11/28/06	8522.0	22.6	33.7

Wellhead Zero Readings

Zone	Serial #	Date	Time of Reading	Frequency Reading	Temp (°C)	Barometric Pressure (ft H20)	Time of Baro Reading
35	06-21917	04/11/07	13:10	8146.8	21.7	33.76	13:15
37	06-21927	04/11/07	13:12	8472.2	21.9	33.76	13:15
58	06-21921	04/11/07	13:14	8094.5	21.6	33.76	13:15
123	07-2297	04/11/07	13:03	8530.1	21.8	33.76	13:15
144	06-21918	04/12/07	8:25	8546.5	21.7	33.76	8:36
173	07-2555	04/11/07	13:07	8719.3	21.9	33.76	13:15
190	06-18345	04/11/07	13:09	8533.1	21.7	33.76	13:15

Post-Installation (Pre-Inflation) Transducer Readings

Zone	Serial #	Date	Time of Reading	Frequency Reading	Temp (°C)	Barometric Pressure (ft H20)	Time of Baro Reading
35	06-21917	04/12/07	14:20	7503.2	26.0	33.59	14:25
37	06-21927	04/12/07	14:20	7617.3	25.9	33.59	14:25
58	06-21921	04/12/07	14:20	6723.8	25.0	33.59	14:25
123	07-2297	04/12/07	14:20	5769.1	20.5	33.59	14:25
144	06-21918	04/12/07	14:20	4725.5	19.4	33.59	14:25
173	07-2555	04/12/07	14:20	6069.4	17.3	33.59	14:25
190	06-18345	04/12/07	14:20	5051.1	16.7	33.59	14:25

Notes

1. All depths and measurements referenced to the final top of well casing.
2. 2-foot by 2-foot by 2-foot well vault installed within concrete, flush with ground surface.

DEPTH to Top of Component (FT)	Distance Above Bottom (FT)	Elevation of Top of Component (FT)	Waterloo Component
0.0	203.4	13.1	1 ft casing
1.0	202.4	12.1	5 ft casing
6.0	197.4	7.1	5 ft casing
11.0	192.4	2.1	5 ft casing
16.0	187.4	-2.9	5 ft casing
21.0	182.4	-7.9	5 ft casing
26.0	177.4	-12.9	PACKER
29.0	174.4	-15.9	1 ft casing
30.0	173.4	-16.9	5 ft casing
35.0	168.4	-21.9	PORT 35
35.5	167.9	-22.4	1 ft casing
36.5	166.9	-23.4	PORT 37
37.0	166.4	-23.9	5 ft casing
42.0	161.4	-28.9	PACKER
45.0	158.4	-31.9	0.5 ft casing
45.5	157.9	-32.4	1 ft casing
46.5	156.9	-33.4	2 ft casing
48.5	154.9	-35.4	PACKER
51.5	151.9	-38.4	5 ft casing
56.5	146.9	-43.4	1 ft casing
57.5	145.9	-44.4	PORT 58
58.0	145.4	-44.9	1 ft casing
59.0	144.4	-45.9	5 ft casing
64.0	139.4	-50.9	PACKER
67.0	136.4	-53.9	5 ft casing
72.0	131.4	-58.9	5 ft casing
77.0	126.4	-63.9	2 ft casing
79.0	124.4	-65.9	PACKER
82.0	121.4	-68.9	5 ft casing
87.0	116.4	-73.9	5 ft casing
92.0	111.4	-78.9	PACKER
95.0	108.4	-81.9	5 ft casing
100.0	103.4	-86.9	1 ft casing
101.0	102.4	-87.9	PACKER
104.0	99.4	-90.9	5 ft casing
109.0	94.4	-95.9	2 ft casing
111.0	92.4	-97.9	2 ft casing
113.0	90.4	-99.9	PACKER
116.0	87.4	-102.9	5 ft casing
121.0	82.4	-107.9	2 ft casing
123.0	80.4	-109.9	PORT 123
123.5	79.9	-110.4	0.5 ft casing
124.0	79.4	-110.9	2 ft casing
126.0	77.4	-112.9	PACKER
129.0	74.4	-115.9	1 ft casing
130.0	73.4	-116.9	2 ft casing
132.0	71.4	-118.9	PACKER
135.0	68.4	-121.9	5 ft casing
140.0	63.4	-126.9	2 ft casing
142.0	61.4	-128.9	2 ft casing
144.0	59.4	-130.9	PORT 144
144.5	58.9	-131.4	5 ft casing
149.5	53.9	-136.4	5 ft casing
154.5	48.9	-141.4	1 ft casing
155.5	47.9	-142.4	PACKER
158.5	44.9	-145.4	5 ft casing
163.5	39.9	-150.4	2 ft casing
165.5	37.9	-152.4	2 ft casing
167.5	35.9	-154.4	PACKER
170.5	32.9	-157.4	2 ft casing
172.5	30.9	-159.4	PORT 173
173.0	30.4	-159.9	2 ft casing
175.0	28.4	-161.9	5 ft casing
180.0	23.4	-166.9	2 ft casing
182.0	21.4	-168.9	PACKER
185.0	18.4	-171.9	5 ft casing
190.0	13.4	-176.9	PORT 190
190.5	12.9	-177.4	1 ft casing
191.5	11.9	-178.4	5 ft casing
196.5	6.9	-183.4	5 ft casing
201.5	1.9	-188.4	2 ft casing
203.5	-0.1	-190.4	SS Plug

WATERLOO INSTALLATION LOG

GZA GEOENVIRONMENTAL OF NEW YORK
440 NINTH AVENUE, 18th FLOOR
NEW YORK, NEW YORK 10001
SCIENTISTS AND ENGINEERS

Client
Entergy
Indian Point Energy Center
Buchanan, NY

WELL ID: MW-60
SHEET: 1 of 1
FILE NO.: 41.0017869.10
PROJECT LOCATION: Indian Point Energy Center

GZA ENGINEER: Steve Kline
CONTRACTOR: Solinst
CONTRACTOR REP: Bruce Blackburn
DATE START/ END: 4/17/07 - 4/18/07

DEPTH TO BOTTOM: 200.5 ft below top of casing
DEPTH TO WATER: Refer to Table 6.1 ft below top of casing
GROUND ELEVATION: 14.31 NGVD 29
CASING ELEVATION: 12.48 NGVD 29

Transducers

Zone	Serial #	Diaphragm Depth (ft below casing)	Diaphragm Elevation (m.s.l.)	Pressure Range (psi)	Linear Gage Factor (G)	Thermal Factor (K)	Accuracy (+/- ft H20)
35	07-2304	34.6	-22.1	50	0.019330	-0.011370	0.115
53	07-1142	52.9	-40.4	25	0.006794	0.001766	0.058
55	07-1141	54.4	-41.9	25	0.006835	-0.001129	0.058
72	07-2298	72.1	-59.6	50	0.017220	-0.012040	0.115
135	07-2300	134.6	-122.1	50	0.018090	-0.012560	0.115
154	07-492	154.1	-141.6	100	0.026120	0.001550	0.231
176	07-2553	175.6	-163.1	100	0.027560	0.002050	0.231

Factory Zero Transducer Readings

Zone	Serial #	Date	Frequency Reading	Temp (°C)	Barometric Pressure (ft H20)
35	07-2304	03/15/07	8290.0	22.6	33.2
53	07-1142	03/15/07	9584.0	23.2	33.0
55	07-1141	03/15/07	9643.0	23.1	33.0
72	07-2298	03/15/07	8666.0	23.1	33.2
135	07-2300	03/14/07	8649.0	22.5	33.2
154	07-492	03/14/07	8933.0	22.9	33.2
176	07-2553	03/14/07	8807.0	23.1	33.2

Wellhead Zero Readings

Zone	Serial #	Date	Time of Reading	Frequency Reading	Temp (ºC)	Barometric Pressure (ft H20)	Time of Baro Reading
35	07-2304	04/17/07	11:33	8304.5	9.8	33.36	11:30
53	07-1142	04/18/07	10:10	9546.0	14.0	33.70	10:10
55	07-1141	04/17/07	11:27	9634.5	10.3	33.36	11:30
72	07-2298	04/17/07	11:31	8680.4	10.0	33.36	11:30
135	07-2300	04/17/07	11:30	8661.1	10.1	33.36	11:30
154	07-492	04/17/07	11:31	8943.3	9.9	33.36	11:30
176	07-2553	04/17/07	11:29	8810.7	10.4	33.36	11:30

Post-Installation (Pre-Inflation) Transducer Readings

Zone	Serial #	Date	Time of Reading	Frequency Reading	Temp (ºC)	Barometric Pressure (ft H20)	Time of Baro Reading
35	07-2304	04/18/07	17:15	7720.4	11.9	33.76	17:30
53	07-1142	04/18/07	17:15	6819.0	12.8	33.76	17:30
55	07-1141	04/18/07	17:15	6738.1	12.7	33.76	17:30
72	07-2298	04/18/07	17:15	7082.7	13.4	33.76	17:30
135	07-2300	04/18/07	17:15	5631.7	13.4	33.76	17:30
154	07-492	04/18/07	17:15	6528.4	13.4	33.76	17:30
176	07-2553	04/18/07	17:15	6201.2	13.6	33.76	17:30

Notes

1. All depths and measurements referenced to the final top of well casing.
2. Splice in port 55 transducer cable at elevation 26 ft msl.
3. 2-foot by 2-foot by 2-foot well vault installed within concrete, flush with ground surface.

DEPTH to Top of Component (FT)	Dsitance Above Bottom (FT)	Elevation of Top of Component (FT)	Waterloo Component
0.0	200.5	12.5	2 ft casing
1.9	198.6	10.6	5 ft casing
6.9	193.6	5.6	5 ft casing
11.9	188.6	0.6	5 ft casing
16.9	183.6	-4.4	5 ft casing
21.9	178.6	-9.4	PACKER
24.9	175.6	-12.4	5 ft casing
29.9	170.6	-17.4	5 ft casing
34.9	165.6	-22.4	PORT 35
35.4	165.1	-22.9	2 ft casing
37.4	163.1	-24.9	2 ft casing
39.4	161.1	-26.9	PACKER
42.4	158.1	-29.9	PACKER
45.4	155.1	-32.9	5 ft casing
50.4	150.1	-37.9	2 ft casing
52.4	148.1	-39.9	1 ft casing
53.4	147.1	-40.9	PORT 53
53.9	146.6	-41.4	1 ft casing
54.9	145.6	-42.4	PORT 55
55.4	145.1	-42.9	2 ft casing
57.4	143.1	-44.9	2 ft casing
59.4	141.1	-46.9	PACKER
62.4	138.1	-49.9	1 ft casing
63.4	137.1	-50.9	PACKER
66.4	134.1	-53.9	5 ft casing
71.4	129.1	-58.9	1 ft casing
72.4	128.1	-59.9	PORT 72
72.9	127.6	-60.4	5 ft casing
77.9	122.6	-65.4	1 ft casing
78.9	121.6	-66.4	PACKER
81.9	118.6	-69.4	2 ft casing
83.9	116.6	-71.4	1 ft casing
84.9	115.6	-72.4	PACKER
87.9	112.6	-75.4	5 ft casing
92.9	107.6	-80.4	5 ft casing
97.9	102.6	-85.4	5 ft casing
102.9	97.6	-90.4	PACKER
105.9	94.6	-93.4	5 ft casing
110.9	89.6	-98.4	1 ft casing
111.9	88.6	-99.4	PACKER
114.9	85.6	-102.4	5 ft casing
119.9	80.6	-107.4	2 ft casing
121.9	78.6	-109.4	PACKER
124.9	75.6	-112.4	5 ft casing
129.9	70.6	-117.4	5 ft casing
134.9	65.6	-122.4	PORT 135
135.4	65.1	-122.9	5 ft casing
140.4	60.1	-127.9	1 ft casing
141.4	59.1	-128.9	PACKER
144.4	56.1	-131.9	PACKER
147.4	53.1	-134.9	5 ft casing
152.4	48.1	-139.9	2 ft casing
154.4	46.1	-141.9	PORT 154
154.9	45.6	-142.4	5 ft casing
159.9	40.6	-147.4	5 ft casing
164.9	35.6	-152.4	PACKER
167.9	32.6	-155.4	PACKER
170.9	29.6	-158.4	5 ft casing
175.9	24.6	-163.4	PORT 176
176.4	24.1	-163.9	5 ft casing
181.4	19.1	-168.9	5 ft casing
186.4	14.1	-173.9	5 ft casing
191.4	9.1	-178.9	5 ft casing
196.4	4.1	-183.9	2 ft casing
198.4	2.1	-185.9	2 ft casing
200.4	0.1	-187.9	SS Plug

WATERLOO INSTALLATION LOG

GZA GEOENVIRONMENTAL OF NEW YORK 440 NINTH AVENUE, 18th FLOOR NEW YORK, NEW YORK 10001 SCIENTISTS AND ENGINEERS	Client Entergy Indian Point Energy Center Buchanan, NY	WELL ID: MW-62 SHEET: 1 of 1 FILE NO.: 41.0017869.01 PROJECT LOCATION: Indian Point Energy Center

GZA ENGINEER:	Steve Kline	DEPTH TO BOTTOM:	198.7	ft below top of casing
CONTRACTOR:	Solinst	DEPTH TO WATER:	Refer to Table 6.1	ft below top of casing
CONTRACTOR REP:	Bruce Blackburn	GROUND ELEVATION	14.69	NGVD 29
DATE START/ END:	4/10/07 - 4/11/07	CASING ELEVATION	12.82	NGVD 29

Transducers

Zone	Serial #	Diaphragm Depth (ft below casing)	Diaphragm Elevation (m.s.l.)	Pressure Range (psi)	Linear Gage Factor (G)	Thermal Factor (K)	Accuracy (+/- ft H20)
52	07-2301	51.3	-38.5	50	0.017840	-0.019740	0.115
53	06-21928	52.8	-40.0	50	0.013830	-0.018110	0.115
71	06-21924	70.8	-58.0	50	0.015150	-0.008430	0.115
92	06-21922	91.3	-78.5	50	0.015420	-0.023490	0.115
138	06-21916	137.8	-125.0	50	0.014980	-0.009920	0.115
181	06-18346	180.3	-167.5	100	0.023540	-0.018380	0.231
182	06-18343	181.8	-169.0	100	0.024080	0.014200	0.231

Factory Zero Transducer Readings

Zone	Serial #	Date	Frequency Reading	Temp (°C)	Barometric Pressure (ft H20)
52	07-2301	03/15/07	8648.0	22.5	33.2
53	06-21928	11/29/06	8537.0	23.2	33.7
71	06-21924	11/29/06	8489.0	23.5	33.7
92	06-21922	11/29/06	8523.0	24.3	33.7
138	06-21916	11/29/06	8667.0	24.5	33.7
181	06-18346	11/28/06	9129.0	23.1	33.7
182	06-18343	11/28/06	8948.0	22.6	33.7

Wellhead Zero Readings

Zone	Serial #	Date	Time of Reading	Frequency Reading	Temp (ºC)	Barometric Pressure (ft H20)	Time of Baro Reading
52	07-2301	04/10/07	11:40	8640.9	13.2	33.99	11:40
53	06-21928	04/10/07	11:40	8551.5	11.9	33.99	11:40
71	06-21924	04/10/07	11:40	8489.3	12.7	33.99	11:40
92	06-21922	04/10/07	11:40	8534.9	11.9	33.99	11:40
138	06-21916	04/10/07	11:40	8671.4	13.1	33.99	11:40
181	06-18346	04/10/07	11:40	9139.7	11.7	33.99	11:40
182	06-18343	04/10/07	11:40	8916.3	12.8	33.99	11:40

Post-Installation (Pre-Inflation) Transducer Readings

Zone	Serial #	Date	Time of Reading	Frequency Reading	Temp (ºC)	Barometric Pressure (ft H20)	Time of Baro Reading
52	07-2301	04/11/07	14:10	7676.5	14.9	34.10	14:20
53	06-21928	04/11/07	14:10	7244.5	15.2	34.10	14:20
71	06-21924	04/11/07	14:10	6790.9	15.2	34.10	14:20
92	06-21922	04/11/07	14:10	6289.2	15.0	34.10	14:20
138	06-21916	04/11/07	14:10	5019.5	14.6	34.10	14:20
181	06-18346	04/11/07	14:10	6040.5	14.6	34.10	14:20
182	06-18343	04/11/07	14:10	5870.4	14.6	34.10	14:20

Notes

1. All depths and measurements referenced to the final top of well casing.
2. Wellhead zero times are approximate within 15 minutes of actual readings.
3. 2-foot by 2-foot by 2-foot well vault installed within concrete, flush with ground surface.
4. Monitoring wells installed in the overburden soils adjacent to the 201-foor boring.

DEPTH to Top of Component (FT)	Dsitance Above Bottom (FT)	Elevation of Top of Component (FT)	Waterloo Component
-0.4	199.1	13.2	0.5 ft casing
0.1	198.6	12.7	1 ft casing
1.1	197.6	11.7	5 ft casing
6.1	192.6	6.7	5 ft casing
11.1	187.6	1.7	5 ft casing
16.1	182.6	-3.3	5 ft casing
21.1	177.6	-8.3	5 ft casing
26.1	172.6	-13.3	5 ft casing
31.1	167.6	-18.3	5 ft casing
36.1	162.6	-23.3	5 ft casing
41.1	157.6	-28.3	2 ft casing
43.1	155.6	-30.3	PACKER
46.1	152.6	-33.3	0.5 ft casing
46.6	152.1	-33.8	PACKER
49.6	149.1	-36.8	2 ft casing
51.6	147.1	-38.8	PORT 52
52.1	146.6	-39.3	1 ft casing
53.1	145.6	-40.3	PORT 53
53.6	145.1	-40.8	0.5 ft casing
54.1	144.6	-41.3	PACKER
57.1	141.6	-44.3	1 ft casing
58.1	140.6	-45.3	PACKER
61.1	137.6	-48.3	5 ft casing
66.1	132.6	-53.3	5 ft casing
71.1	127.6	-58.3	PORT 71
71.6	127.1	-58.8	5 ft casing
76.6	122.1	-63.8	5 ft casing
81.6	117.1	-68.8	1 ft casing
82.6	116.1	-69.8	PACKER
85.6	113.1	-72.8	PACKER
88.6	110.1	-75.8	1 ft casing
89.6	109.1	-76.8	2 ft casing
91.6	107.1	-78.8	PORT 92
92.1	106.6	-79.3	5 ft casing
97.1	101.6	-84.3	2 ft casing
99.1	99.6	-86.3	PACKER
102.1	96.6	-89.3	5 ft casing
107.1	91.6	-94.3	5 ft casing
112.1	86.6	-99.3	PACKER
115.1	83.6	-102.3	2 ft casing
117.1	81.6	-104.3	1 ft casing
118.1	80.6	-105.3	5 ft casing
123.1	75.6	-110.3	PACKER
126.1	72.6	-113.3	5 ft casing
131.1	67.6	-118.3	5 ft casing
136.1	62.6	-123.3	2 ft casing
138.1	60.6	-125.3	PORT 138
138.6	60.1	-125.8	5 ft casing
143.6	55.1	-130.8	PACKER
146.6	52.1	-133.8	5 ft casing
151.6	47.1	-138.8	2 ft casing
153.6	45.1	-140.8	PACKER
156.6	42.1	-143.8	5 ft casing
161.6	37.1	-148.8	2 ft casing
163.6	35.1	-150.8	PACKER
166.6	32.1	-153.8	5 ft casing
171.6	27.1	-158.8	2 ft casing
173.6	25.1	-160.8	1 ft casing
174.6	24.1	-161.8	PACKER
177.6	21.1	-164.8	1 ft casing
178.6	20.1	-165.8	2 ft casing
180.6	18.1	-167.8	PORT 181
181.1	17.6	-168.3	1 ft casing
182.1	16.6	-169.3	PORT 182
182.6	16.1	-169.8	5 ft casing
187.6	11.1	-174.8	5 ft casing
192.6	6.1	-179.8	5 ft casing
197.6	1.1	-184.8	1 ft casing
198.6	0.1	-185.8	SS Plug

WATERLOO INSTALLATION LOG

GZA GEOENVIRONMENTAL OF NEW YORK
440 NINTH AVENUE, 18th FLOOR
NEW YORK, NEW YORK 10001
SCIENTISTS AND ENGINEERS

Client
Entergy
Indian Point Energy Center
Buchanan, NY

WELL ID	MW-63
SHEET	1 of 1
FILE NO.	41.0017869.10
PROJECT LOCATION	Indian Point Energy Center

GZA ENGINEER:	Steve Kline	DEPTH TO BOTTOM:	191.1	ft below top of casing
CONTRACTOR:	Solinst	DEPTH TO WATER:	Refer to Table 6.1	ft below top of casing
CONTRACTOR REP:	Bruce Blackburn	GROUND ELEVATION	14.178	NGVD 29
DATE START/ END:	4/19/07 - 4/20/07	CASING ELEVATION	12.315	NGVD 29

Transducers

Zone	Serial #	Diaphragm Depth (ft below casing)	Diaphragm Elevation (m.s.l.)	Pressure Range (psi)	Linear Gage Factor (G)	Thermal Factor (K)	Accuracy (+/- ft H20)
50	06-21919	49.2	-36.9	50	0.014800	-0.017780	0.115
91	06-21915	90.2	-77.9	50	0.015420	-0.008580	0.115
93	06-21923	92.7	-80.4	50	0.015320	-0.016750	0.115
112	07-2303	111.2	-98.9	50	0.018110	-0.010700	0.115
121	07-2302	120.7	-108.4	50	0.017880	-0.006950	0.115
163	06-18342	162.2	-149.9	100	0.024640	0.011850	0.231
174	07-2554	173.7	-161.4	100	0.026010	-0.011740	0.231

Factory Zero Transducer Readings

Zone	Serial #	Date	Frequency Reading	Temp (ºC)	Barometric Pressure (ft H20)
50	06-21919	11/29/06	8205.0	24.3	33.7
91	06-21915	11/29/06	8333.0	24.5	33.7
93	06-21923	11/29/06	8232.0	22.8	33.7
112	07-2303	03/15/07	8800.0	22.6	33.2
121	07-2302	03/15/07	8593.0	22.8	33.2
163	06-18342	11/28/06	8833.0	22.8	33.7
174	07-2554	03/14/07	9102.0	23.2	33.2

Wellhead Zero Readings

Zone	Serial #	Date	Time of Reading	Frequency Reading	Temp (ºC)	Barometric Pressure (ft H20)	Time of Baro Reading
50	06-21919	04/19/07	9:00	8214.5	13.6	33.87	9:00
91	06-21915	04/19/07	9:00	8342.9	14.1	33.87	9:00
93	06-21923	04/19/07	9:00	8244.5	13.8	33.87	9:00
112	07-2303	04/19/07	9:00	8795.2	13.7	33.87	9:00
121	07-2302	04/19/07	9:00	8593.2	13.7	33.87	9:00
163	06-18342	04/19/07	9:00	8837.9	13.9	33.87	9:00
174	07-2554	04/19/07	9:00	9103.0	14.2	33.87	9:00

Post-Installation (Pre-Inflation) Transducer Readings

Zone	Serial #	Date	Time of Reading	Frequency Reading	Temp (ºC)	Barometric Pressure (ft H20)	Time of Baro Reading
50	06-21919	04/19/07	15:00	7038.4	15.6		
91	06-21915	04/19/07	15:00	6054.5	15.5		
93	06-21923	04/19/07	15:00	5875.4	15.4		
112	07-2303	04/19/07	15:00	6376.8	15.2		
121	07-2302	04/19/07	15:00	5882.6	15.1		
163	06-18342	04/19/07	15:00	6159.9	14.9		
174	07-2554	04/19/07	15:00	6372.5	14.8		

Notes

1. All depths and measurements referenced to the final top of well casing.
2. Wellhead zero times are approximate within 15 minutes of actual readings.
3. 2-foot by 2-foot by 2-foot well vault installed within concrete, flush with ground surface.
4. Monitoring wells installed in the overburden soils adjacent to the 201-foor boring.

DEPTH to Top of Component (FT)	Dstance Above Bottom (FT)	Elevation of Top of Component (FT)	Waterloo Component
-0.5	191.6	12.8	1 ft casing
0.5	190.6	11.8	5 ft casing
5.5	185.6	6.8	5 ft casing
10.5	180.6	1.8	5 ft casing
15.5	175.6	-3.2	5 ft casing
20.5	170.6	-8.2	5 ft casing
25.5	165.6	-13.2	5 ft casing
30.5	160.6	-18.2	5 ft casing
35.5	155.6	-23.2	PACKER
38.5	152.6	-26.2	PACKER
41.5	149.6	-29.2	5 ft casing
46.5	144.6	-34.2	2 ft casing
48.5	142.6	-36.2	1 ft casing
49.5	141.6	-37.2	PORT 50
50.0	141.1	-37.7	5 ft casing
55.0	136.1	-42.7	2 ft casing
57.0	134.1	-44.7	1 ft casing
58.0	133.1	-45.7	PACKER
61.0	130.1	-48.7	5 ft casing
66.0	125.1	-53.7	PACKER
69.0	122.1	-56.7	5 ft casing
74.0	117.1	-61.7	2 ft casing
76.0	115.1	-63.7	2 ft casing
78.0	113.1	-65.7	0.5 ft casing
78.5	112.6	-66.2	PACKER
81.5	109.6	-69.2	2 ft casing
83.5	107.6	-71.2	2 ft casing
85.5	105.6	-73.2	5 ft casing
90.5	100.6	-78.2	PORT 91
91.0	100.1	-78.7	2 ft casing
93.0	98.1	-80.7	PORT 93
93.5	97.6	-81.2	5 ft casing
98.5	92.6	-86.2	2 ft casing
100.5	90.6	-88.2	PACKER
103.5	87.6	-91.2	PACKER
106.5	84.6	-94.2	5 ft casing
111.5	79.6	-99.2	PORT 112
112.0	79.1	-99.7	PACKER
115.0	76.1	-102.7	PACKER
118.0	73.1	-105.7	2 ft casing
120.0	71.1	-107.7	1 ft casing
121.0	70.1	-108.7	PORT 121
121.5	69.6	-109.2	5 ft casing
126.5	64.6	-114.2	1 ft casing
127.5	63.6	-115.2	PACKER
130.5	60.6	-118.2	5 ft casing
135.5	55.6	-123.2	1 ft casing
136.5	54.6	-124.2	2 ft casing
138.5	52.6	-126.2	PACKER
141.5	49.6	-129.2	5 ft casing
146.5	44.6	-134.2	1 ft casing
147.5	43.6	-135.2	PACKER
150.5	40.6	-138.2	5 ft casing
155.5	35.6	-143.2	5 ft casing
160.5	30.6	-148.2	2 ft casing
162.5	28.6	-150.2	PORT 163
163.0	28.1	-150.7	2 ft casing
165.0	26.1	-152.7	PACKER
168.0	23.1	-155.7	5 ft casing
173.0	18.1	-160.7	1 ft casing
174.0	17.1	-161.7	PORT 174
174.5	16.6	-162.2	0.5 ft casing
175.0	16.1	-162.7	5 ft casing
180.0	11.1	-167.7	5 ft casing
185.0	6.1	-172.7	5 ft casing
190.0	1.1	-177.7	1 ft casing
191.0	0.1	-178.7	SS Plug

WATERLOO INSTALLATION LOG

GZA GEOENVIRONMENTAL OF NEW YORK
440 NINTH AVENUE, 18th FLOOR
NEW YORK, NEW YORK 10001
SCIENTISTS AND ENGINEERS

Client
Entergy
Indian Point Energy Center
Buchanan, NY

WELL ID: MW-67
SHEET: 1 of 1
FILE NO.: 41.0017869.10
PROJECT LOCATION: Indian Point Energy Center

GZA ENGINEER: Steve Kline
CONTRACTOR: none
CONTRACTOR REP: none
DATE START/ END: 8/26/07 - 8/27/07

DEPTH TO BOTTOM: 347.4 ft below top of casing
DEPTH TO WATER: 11.5 ft below top of casing
GROUND ELEVATION: 14.356 ft NGVD 29
CASING ELEVATION: 12.511 ft NGVD 29

Transducers

Zone	Serial #	Diaphragm Depth (ft below casing)	Diaphragm Elevation (m.s.l.)	Pressure Range (psi)	Linear Gage Factor (G)	Thermal Factor (K)	Accuracy (+/- ft H20)
39	07-13323	38.0	-25.5	50	0.015860	0.003660	0.115
105	07-13324	104.5	-92.0	50	0.015280	-0.018390	0.115
173	07-12853	172.0	-159.5	100	0.024590	-0.011290	0.231
219	07-12852	218.5	-206.0	100	0.023270	-0.023010	0.231
276	07-12851	275.0	-262.5	100	0.023950	-0.023610	0.231
323	07-14572	322.0	-309.5	145	0.037170	-0.038880	0.334
340	07-14573	339.5	-327.0	145	0.038050	-0.000960	0.334

Factory Zero Transducer Readings

Zone	Serial #	Date	Frequency Reading	Temp (°C)	Barometric Pressure (ft H20)
39	07-13323	07/19/07	8897	25.1	33.1
105	07-13324	07/19/07	8629	24.6	33.1
173	07-12853	07/19/07	9275	24.1	33.1
219	07-12852	07/19/07	8944	24.0	33.1
276	07-12851	07/19/07	9112	24.1	33.1
323	07-14572	07/19/07	8998	24.8	33.1
340	07-14573	07/19/07	8726	24.3	33.1

Wellhead Zero Readings

Zone	Serial #	Date	Time of Reading	Frequency Reading	Temp (ºC)	Barometric Pressure (ft H20)	Time of Baro Reading
39	07-13323	08/26/07	10:17	8900.9	17.8	33.87	10:17
105	07-13324	08/26/07	10:05	8634.8	17.3	33.87	10:05
173	07-12853	08/26/07	9:50	9282.1	16.3	33.87	9:50
219	07-12852	08/26/07	9:40	8948.9	17.9	33.87	9:40
276	07-12851	08/26/07	9:20	9116.5	16.5	33.82	9:21
323	07-14572	08/26/07	9:30	9009.5	16.4	33.82	9:31
340	07-14573	08/26/07	8:54	8730.2	16.6	33.82	8:45

Post-Installation (Pre-Inflation) Transducer Readings

Zone	Serial #	Date	Time of Reading	Pressure Head (ft)	Temp (ºC)	Barometric Pressure (ft H20)	Time of Baro Reading
39	07-13323	08/27/06	15:00	27.214	17.8		
105	07-13324	08/27/06	15:00	94.420	17.2		
173	07-12853	08/27/06	15:00	161.594	14.8		
219	07-12852	08/27/06	15:00	208.166	14.2		
276	07-12851	08/27/06	15:00	265.594	13.5		
323	07-14572	08/27/06	15:00	311.649	13.3		
340	07-14573	08/27/06	15:00	329.495	12.9		

Notes

All depths and measurements referenced to top of well casing at time of installation.

Cable of transducer at port 276 was spliced approximately 134' below top of casing.

Depth to bottom measurement prior to installation was 347.9. After installation completion, an apparent 0.3 feet of depth had been lost.

Elevations and depths to top of Waterloo components indicate measurements at the joint of the component.

DEPTH to Top of Component (FT)	Distance Above Bottom (FT)	Elevation of Top of Component (FT)	Waterloo Component
-0.2	347.6	12.7	0.5 ft casing
0.3	347.1	12.2	5 ft casing
5.3	342.1	7.2	5 ft casing
10.3	337.1	2.2	5 ft casing
15.3	332.1	-2.8	5 ft casing
20.3	327.1	-7.8	5 ft casing
25.3	322.1	-12.8	PACKER
28.3	319.1	-15.8	5 ft casing
33.3	314.1	-20.8	5 ft casing
38.3	309.1	-25.8	PORT 39
38.8	308.6	-26.3	5 ft casing
43.8	303.6	-31.3	5 ft casing
48.8	298.6	-36.3	5 ft casing
53.8	293.6	-41.3	PACKER
56.8	290.6	-44.3	2 ft casing
58.8	288.6	-46.3	PACKER
61.8	285.6	-49.3	2 ft casing
63.8	283.6	-51.3	5 ft casing
68.8	278.6	-56.3	PACKER
71.8	275.6	-59.3	5 ft casing
76.8	270.6	-64.3	PACKER
79.8	267.6	-67.3	2 ft casing
81.8	265.6	-69.3	5 ft casing
86.8	260.6	-74.3	PACKER
89.8	257.6	-77.3	5 ft casing
94.8	252.6	-82.3	5 ft casing
99.8	247.6	-87.3	5 ft casing
104.8	242.6	-92.3	PORT 105
105.3	242.1	-92.8	5 ft casing
110.3	237.1	-97.8	PACKER
113.3	234.1	-100.8	1 ft casing
114.3	233.1	-101.8	PACKER
117.3	230.1	-104.8	1 ft casing
118.3	229.1	-105.8	2 ft casing
120.3	227.1	-107.8	5 ft casing
125.3	222.1	-112.8	PACKER
128.3	219.1	-115.8	2 ft casing
130.3	217.1	-117.8	5 ft casing
135.3	212.1	-122.8	5 ft casing
140.3	207.1	-127.8	PACKER
143.3	204.1	-130.8	5 ft casing
148.3	199.1	-135.8	PACKER
151.3	196.1	-138.8	5 ft casing
156.3	191.1	-143.8	5 ft casing
161.3	186.1	-148.8	PACKER
164.3	183.1	-151.8	1 ft casing
165.3	182.1	-152.8	2 ft casing
167.3	180.1	-154.8	5 ft casing
172.3	175.1	-159.8	PORT 173
172.8	174.6	-160.3	5 ft casing
177.8	169.6	-165.3	5 ft casing
182.8	164.6	-170.3	5 ft casing
187.8	159.6	-175.3	PACKER
190.8	156.6	-178.3	2 ft casing
192.8	154.6	-180.3	PACKER
195.8	151.6	-183.3	2 ft casing
197.8	149.6	-185.3	PACKER
200.8	146.6	-188.3	5 ft casing
205.8	141.6	-193.3	PACKER
208.8	138.6	-196.3	5 ft casing
213.8	133.6	-201.3	5 ft casing
218.8	128.6	-206.3	PORT 219
219.3	128.1	-206.8	5 ft casing
224.3	123.1	-211.8	5 ft casing
229.3	118.1	-216.8	PACKER
232.3	115.1	-219.8	1 ft casing
233.3	114.1	-220.8	5 ft casing
238.3	109.1	-225.8	PACKER
241.3	106.1	-228.8	1 ft casing
242.3	105.1	-229.8	2 ft casing
244.3	103.1	-231.8	PACKER
247.3	100.1	-234.8	PACKER
250.3	97.1	-237.8	5 ft casing
255.3	92.1	-242.8	5 ft casing
260.3	87.1	-247.8	5 ft casing
265.3	82.1	-252.8	5 ft casing
270.3	77.1	-257.8	5 ft casing
275.3	72.1	-262.8	PORT 276
275.8	71.6	-263.3	5 ft casing
280.8	66.6	-268.3	PACKER
283.8	63.6	-271.3	5 ft casing
288.8	58.6	-276.3	PACKER
291.8	55.6	-279.3	PACKER
294.8	52.6	-282.3	2 ft casing
296.8	50.6	-284.3	5 ft casing
301.8	45.6	-289.3	0.5 ft casing
302.3	45.1	-289.8	5 ft casing
307.3	40.1	-294.8	PACKER
310.3	37.1	-297.8	PACKER
313.3	34.1	-300.8	1 ft casing
314.3	33.1	-301.8	PACKER
317.3	30.1	-304.8	5 ft casing
322.3	25.1	-309.8	PORT 323
322.8	24.6	-310.3	5 ft casing
330.3	19.6	-315.3	PACKER
330.8	16.6	-318.3	1 ft casing
334.3	15.6	-319.3	PACKER
334.8	12.6	-322.3	5 ft casing
339.8	7.6	-327.3	PORT 340
340.3	7.1	-327.8	5 ft casing
345.3	2.1	-332.8	2 ft casing
347.3	0.1	-334.8	SS Plug

OPEN ROCK WELL INSTALLATION LOG

GZA GEOENVIRONMENTAL OF NEW YORK		REPORT OF BORING NO.	MW-33
440 NINTH AVENUE, 18TH FLOOR	ENTERGY	SHEET	1 of 1
NEW YORK, NEW YORK 10001	Indian Point Energy Center	FILE NO.	41.0017869.10
ENGINEERS AND SCIENTISTS	Buchanan, New York	CHKD BY	DW

BORING CO.	Aquifer Drilling & Testing	BORING LOCATION	See Exploration Location Plan		
FOREMAN	Doug Wood	GROUND SURFACE ELEV.	18.88'	DATUM	NGVD 29
GZA ENG.	Anton Gallas	DATE START	12/7/06	DATE END	12/12/06

AS-BUILT

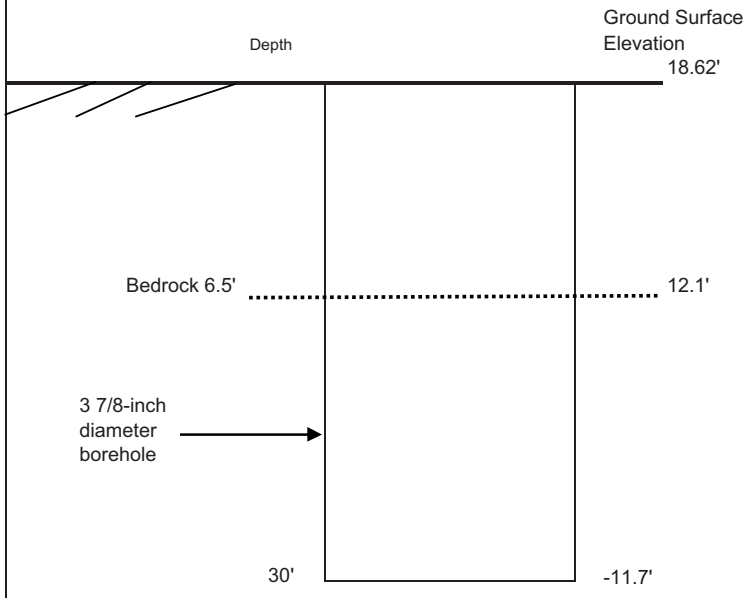

Notes:

1. No equipment installed. Boring left as an open borehole monitoring point.
2. Borehole above 13 feet is 4.5 inches in diameter.

OPEN ROCK WELL INSTALLATION LOG

GZA GEOENVIRONMENTAL OF NEW YORK		REPORT OF BORING NO.	MW-34
440 NINTH AVENUE, 18TH FLOOR	ENTERGY	SHEET	1 of 1
NEW YORK, NEW YORK 10001	Indian Point Energy Center	FILE NO.	41.0017869.10
ENGINEERS AND SCIENTISTS	Buchanan, New York	CHKD BY	DW

BORING CO.	Aquifer Drilling & Testing	BORING LOCATION	See Exploration Location Plan		
FOREMAN	Doug Wood	GROUND SURFACE ELEV.	18.48'	DATUM	NGVD 29
GZA ENG.	Anton Gallas	DATE START	12/7/06	DATE END	12/8/06

AS-BUILT

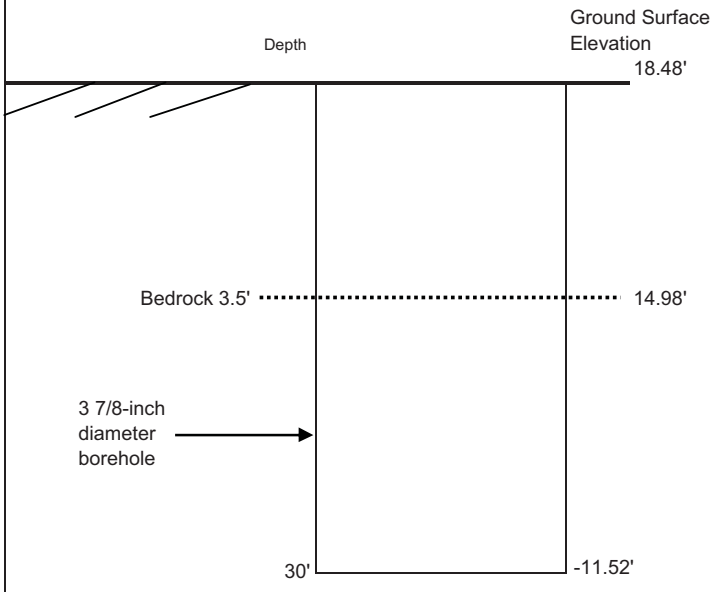

Notes:

1. No equipment installed. Boring left as an open borehole monitoring point.
2. Borehole above 7 feet is 4.5 inches in diameter.

OPEN ROCK WELL INSTALLATION LOG

GZA GEOENVIRONMENTAL OF NEW YORK		REPORT OF BORING NO.	MW-35
440 NINTH AVENUE, 18TH FLOOR	ENTERGY	SHEET	1 of 1
NEW YORK, NEW YORK 10001	Indian Point Energy Center	FILE NO.	41.0017869.10
ENGINEERS AND SCIENTISTS	Buchanan, New York	CHKD BY	DW

BORING CO.	Aquifer Drilling & Testing	BORING LOCATION	See Exploration Location Plan		
FOREMAN	Doug Wood	GROUND SURFACE ELEV.	18.60'	DATUM	NGVD 29
GZA ENG.	Anton Gallas	DATE START	12/5/06	DATE END	12/6/06

AS-BUILT

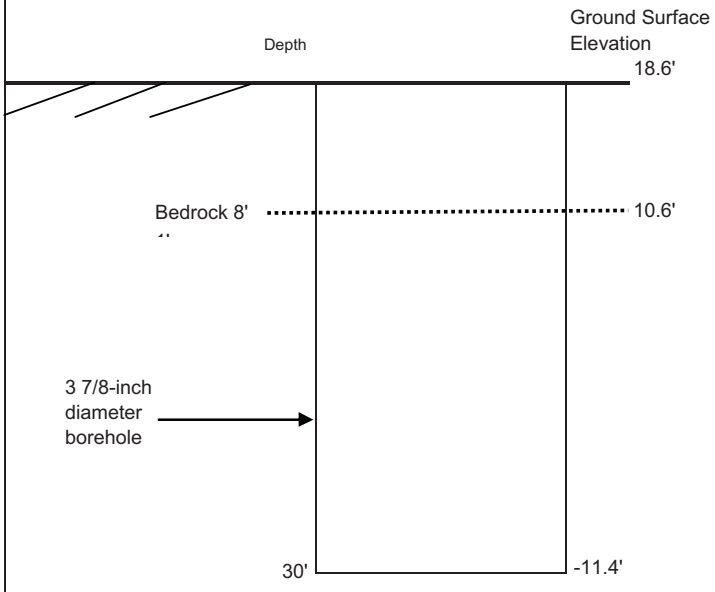

Notes:

1. No equipment installed. Boring left as an open borehole monitoring point.
2. Borehole above 8 feet is 4.5 inches in diameter.

GROUNDWATER OBSERVATION WELL INSTALLATION LOG

GZA GEOENVIRONMENTAL OF NEW YORK		REPORT OF BORING NO.	MW-36
440 NINTH AVENUE, 18TH FLOOR	ENTERGY	SHEET	1 of 1
NEW YORK, NEW YORK 10001	Indian Point Energy Center	FILE NO.	41.0017869.10
ENGINEERS AND SCIENTISTS	Buchanan, New York	CHKD BY	DW

BORING CO.	Aquifer Drilling & Testing	BORING LOCATION	See Exploration Location Plan		
FOREMAN	Doug Wood	GROUND SURFACE ELEV.	11.80'	DATUM	NGVD 29
GZA ENG.	Anton Gallas	DATE START	1/30/06	DATE END	1/30/06

AS-BUILT

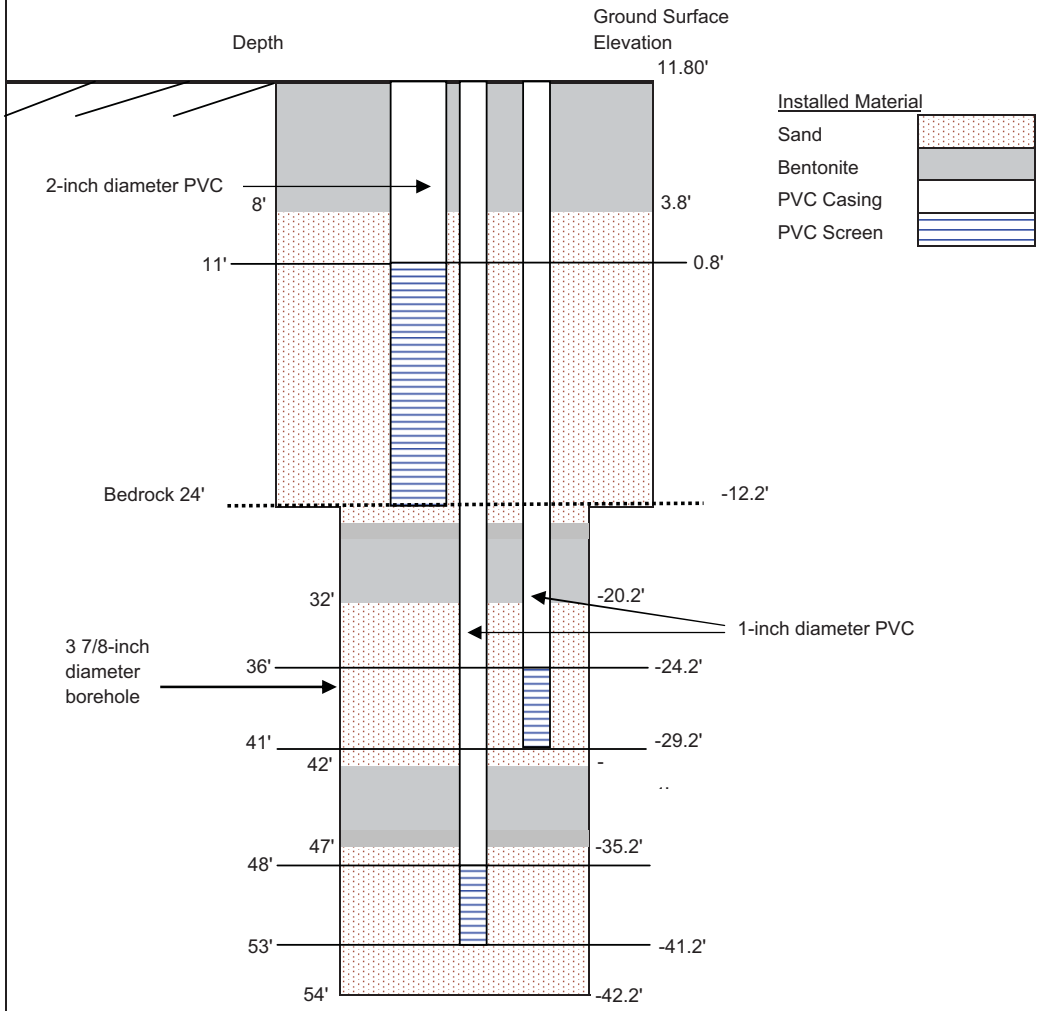

Notes:

1. Borehole above 24 feet is 6.5 inches in diameter.

GROUNDWATER OBSERVATION WELL INSTALLATION LOG

GZA GEOENVIRONMENTAL OF NEW YORK		REPORT OF BORING NO.	MW-37
440 NINTH AVENUE, 18TH FLOOR	ENTERGY	SHEET	1 of 1
NEW YORK, NEW YORK 10001	Indian Point Energy Center	FILE NO.	41.0017869.10
ENGINEERS AND SCIENTISTS	Buchanan, New York	CHKD BY	DW

BORING CO.	Aquifer Drilling & Testing	BORING LOCATION	See Exploration Location Plan		
FOREMAN	Dave Carter	GROUND SURFACE ELEV.	15.02	DATUM	NGVD 29
GZA ENG.	Anton Gallas	DATE START	2/9/06	DATE END	2/9/06

AS-BUILT

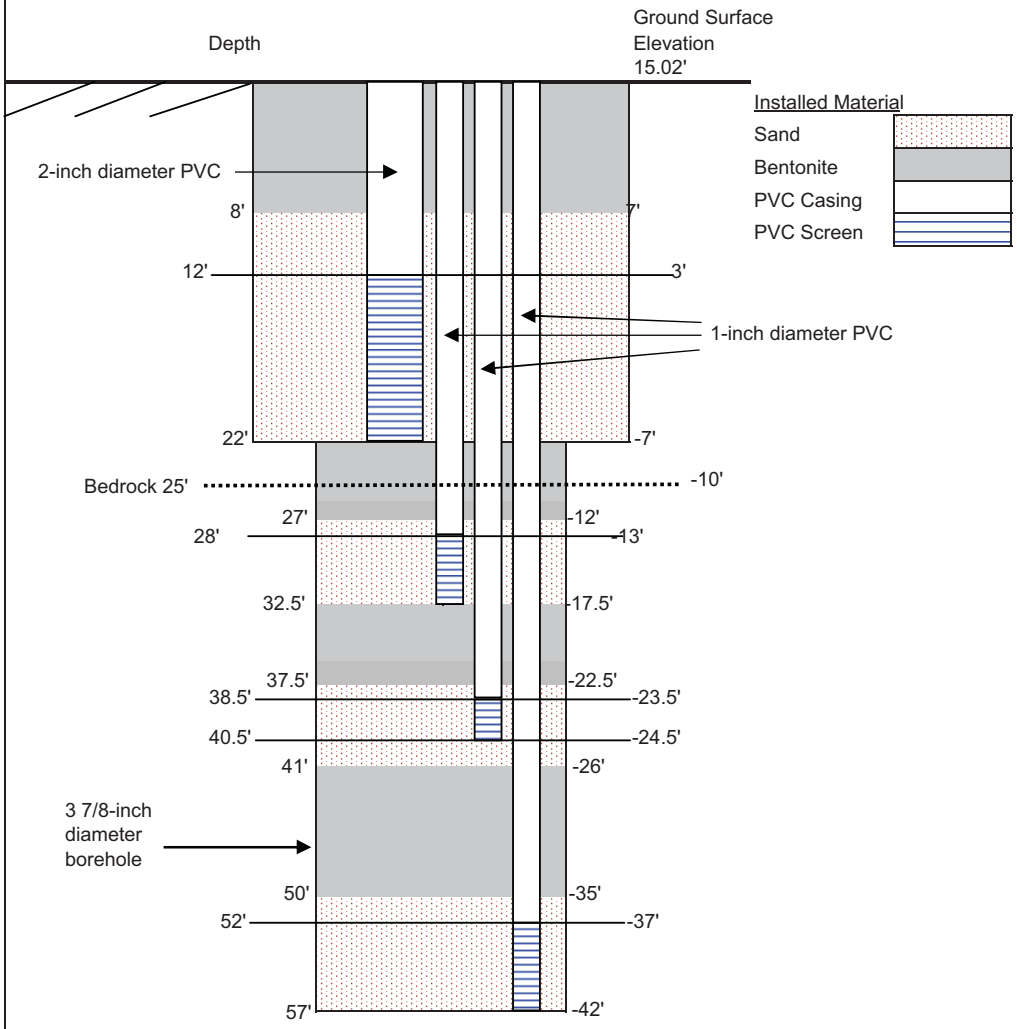

Notes:

1. Borehole above 25 feet is 6.5 inches in diameter.

GROUNDWATER OBSERVATION WELL INSTALLATION LOG

GZA GEOENVIRONMENTAL OF NEW YORK		REPORT OF BORING NO.	MW-38
440 NINTH AVENUE, 18TH FLOOR	ENTERGY	SHEET	1 of 1
NEW YORK, NEW YORK 10001	Indian Point Energy Center	FILE NO.	41.0017869.10
ENGINEERS AND SCIENTISTS	Buchanan, New York	CHKD BY	DW

BORING CO.	Aquifer Drilling & Testing	BORING LOCATION	See Exploration Location Plan		
FOREMAN	Doug Wood	GROUND SURFACE ELEV.	14.34'	DATUM	NGVD 29
GZA ENG.	Anton Gallas	DATE START	11/30/05	DATE END	12/1/05

AS-BUILT

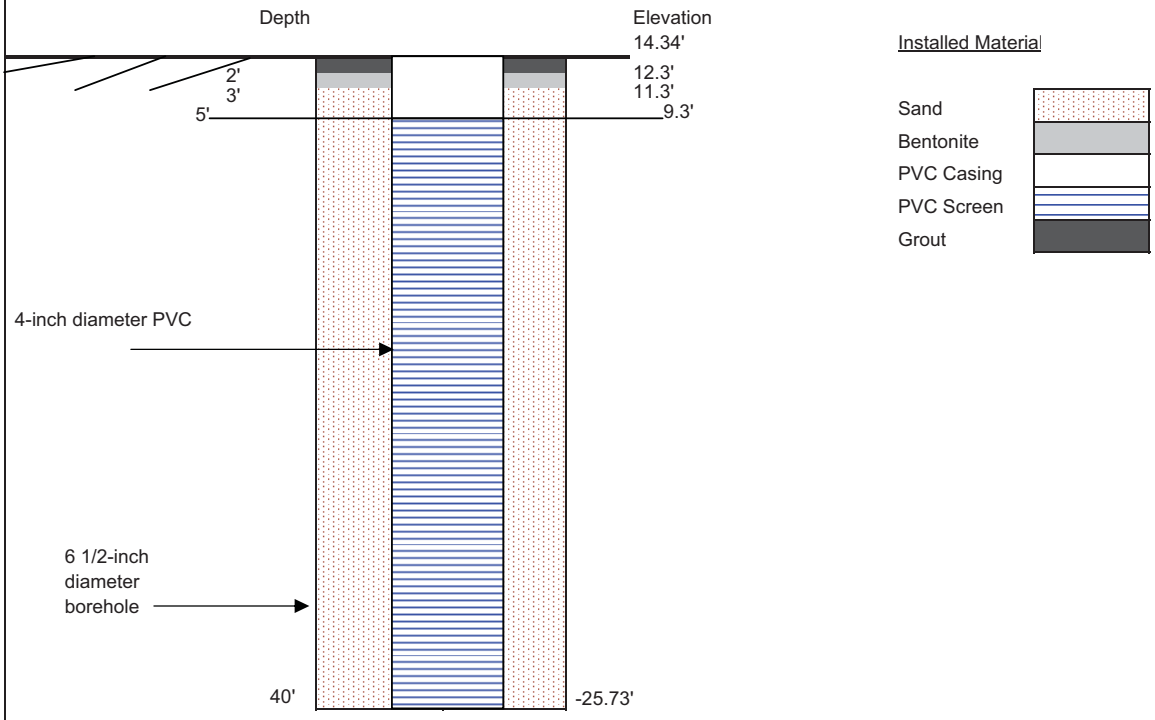

Notes:

1. Bedrock not encountered.

GROUNDWATER OBSERVATION WELL INSTALLATION LOG

GZA GEOENVIRONMENTAL OF NEW YORK		REPORT OF BORING NO.	MW-41
440 NINTH AVENUE, 18TH FLOOR	ENTERGY	SHEET	1 of 1
NEW YORK, NEW YORK 10001	Indian Point Energy Center	FILE NO.	41.0017869.10
ENGINEERS AND SCIENTISTS	Buchanan, New York	CHKD BY	DW

BORING CO.	Aquifer Drilling & Testing	BORING LOCATION	See Exploration Location Plan		
FOREMAN	Doug Wood	GROUND SURFACE ELEV.	54.87'	DATUM	NGVD 29
GZA ENG.	Anton Gallas	DATE START	2/23/06	DATE END	2/23/06

AS-BUILT

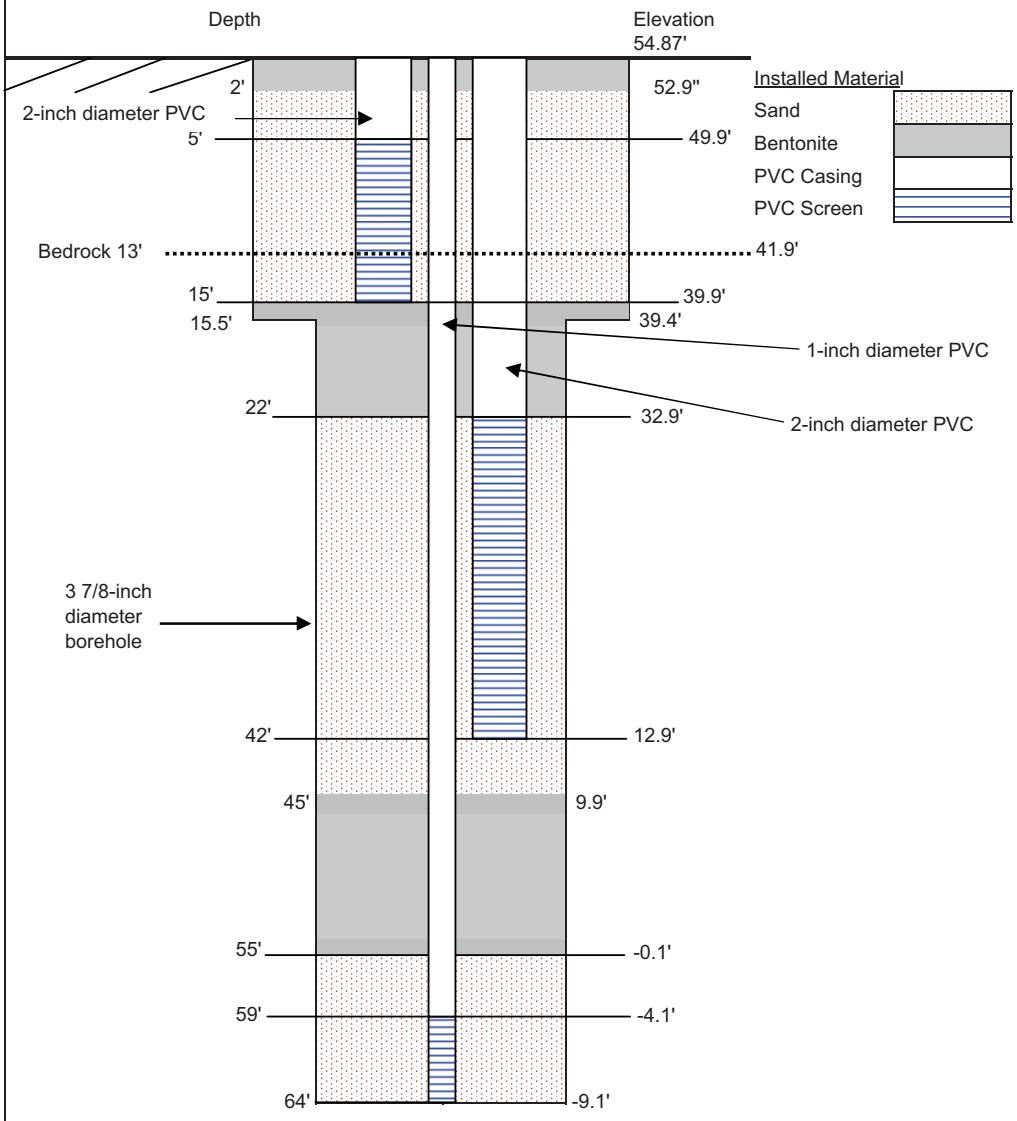

Notes:
1. Borehole above 15.5 feet is 4.5 inches in diameter.

GROUNDWATER OBSERVATION WELL INSTALLATION LOG

GZA GEOENVIRONMENTAL OF NEW YORK		REPORT OF BORING NO.	MW-42
440 NINTH AVENUE, 18TH FLOOR	ENTERGY	SHEET	1 of 1
NEW YORK, NEW YORK 10001	Indian Point Energy Center	FILE NO.	41.0017869.10
ENGINEERS AND SCIENTISTS	Buchanan, New York	CHKD BY	DW

BORING CO.	Aquifer Drilling & Testing	BORING LOCATION	See Exploration Location Plan		
FOREMAN	Doug Wood	GROUND SURFACE ELEV.	69.71'	DATUM	NGVD 29
GZA ENG.	Anton Gallas	DATE START	3/17/06	DATE END	3/17/06

AS-BUILT

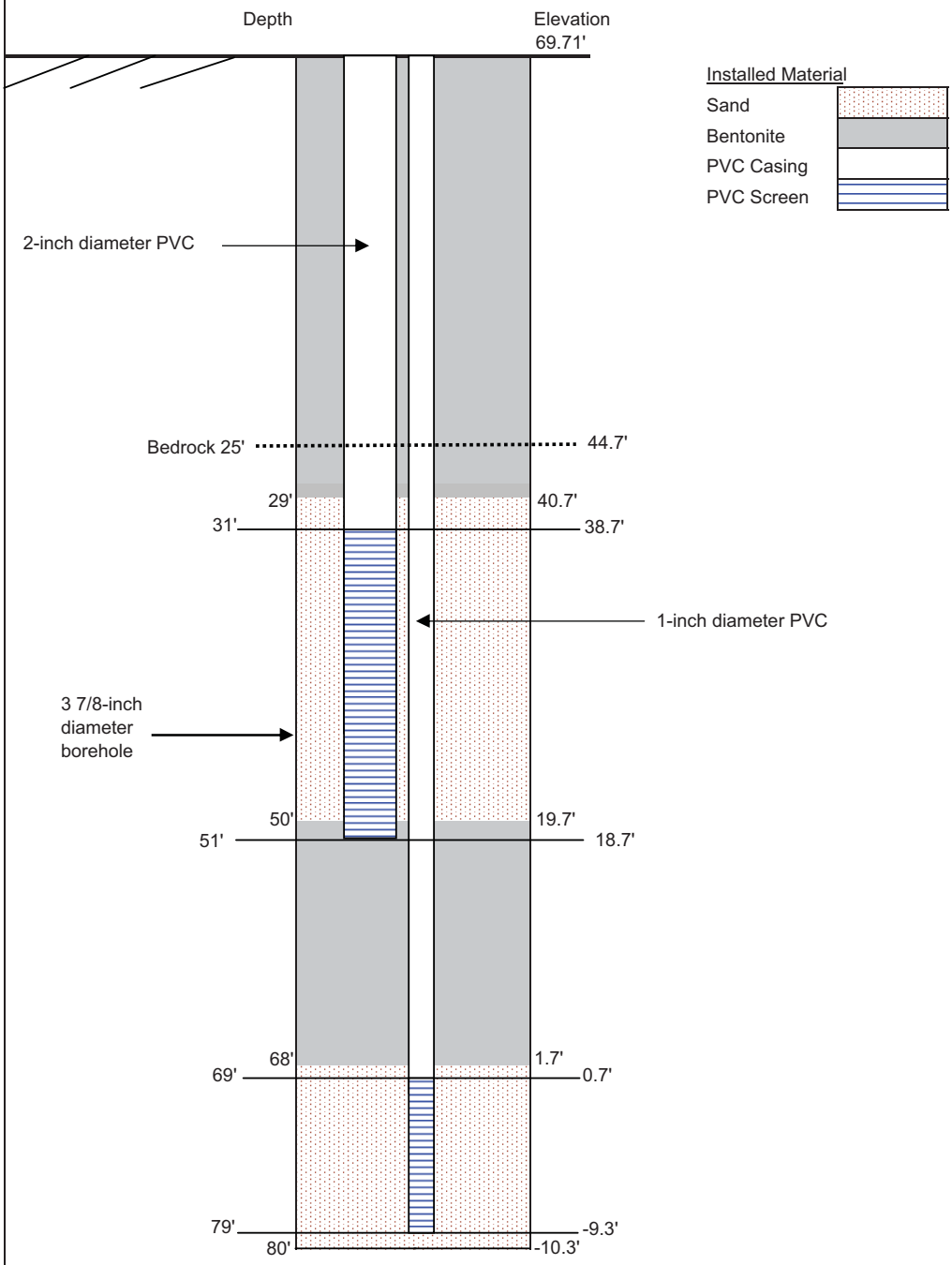

Notes:
1. Borehole above 26 feet is 4.5 inches in diameter.

GROUNDWATER OBSERVATION WELL INSTALLATION LOG

GZA GEOENVIRONMENTAL OF NEW YORK		REPORT OF BORING NO.	MW-43
440 NINTH AVENUE, 18TH FLOOR	ENTERGY	SHEET	1 of 1
NEW YORK, NEW YORK 10001	Indian Point Energy Center	FILE NO.	41.0017869.10
ENGINEERS AND SCIENTISTS	Buchanan, New York	CHKD BY	DW

BORING CO.	Aquifer Drilling & Testing	BORING LOCATION	See Exploration Location Plan		
FOREMAN	Dave Carter	GROUND SURFACE ELEV.	48.76'	DATUM	NGVD 29
GZA ENG.	Anton Gallas	DATE START	3/1/06	DATE END	3/1/06

AS-BUILT

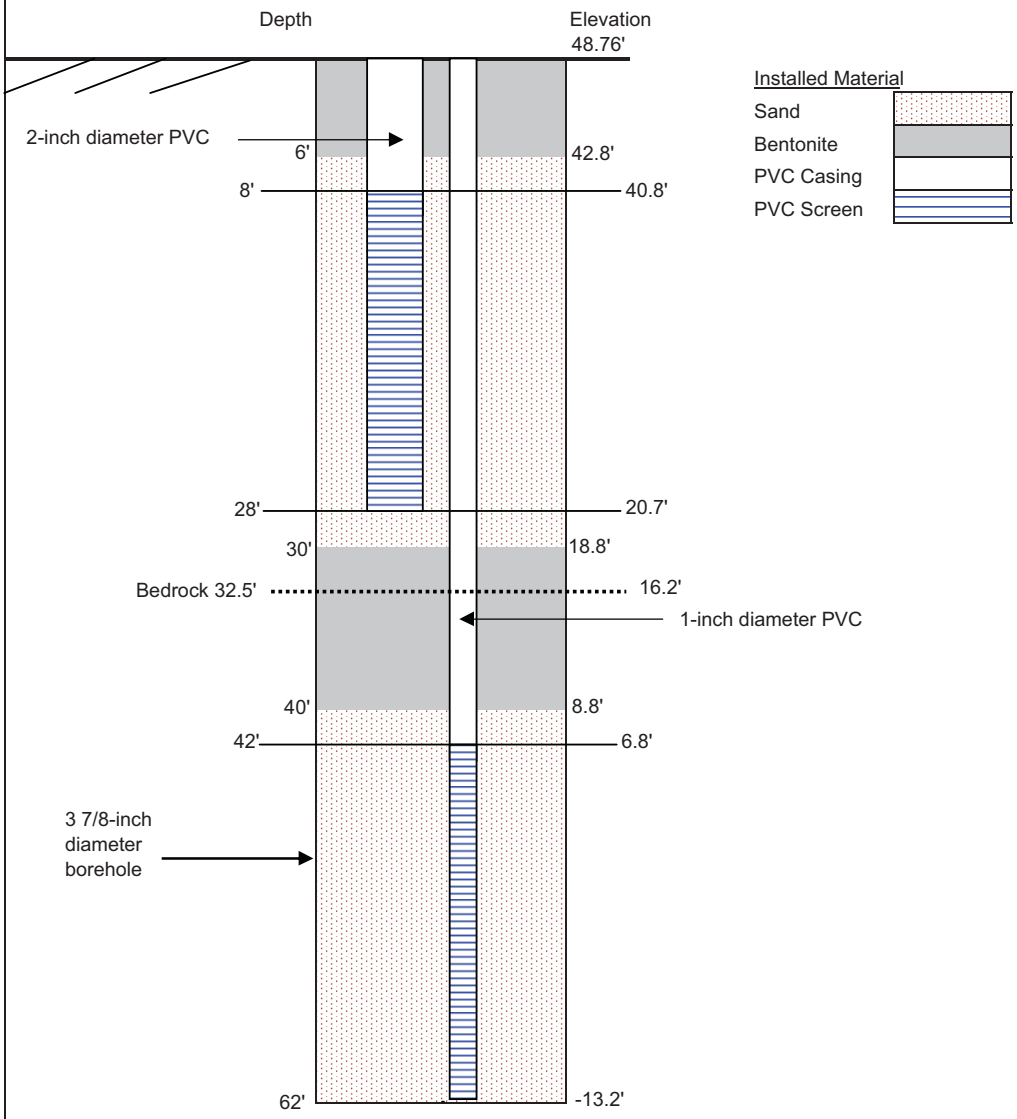

Notes:
1. Borehole above 37.5 feet is 4.5 inches in diameter.

GROUNDWATER OBSERVATION WELL INSTALLATION LOG

GZA GEOENVIRONMENTAL OF NEW YORK		REPORT OF BORING NO.	MW-44
440 NINTH AVENUE, 18TH FLOOR	ENTERGY	SHEET	1 of 1
NEW YORK, NEW YORK 10001	Indian Point Energy Center	FILE NO.	41.0017869.10
ENGINEERS AND SCIENTISTS	Buchanan, New York	CHKD BY	DW

BORING CO.	Aquifer Drilling & Testing	BORING LOCATION	See Exploration Location Plan		
FOREMAN	Ed Borner	GROUND SURFACE ELEV.	93.52'	DATUM	NGVD 29
GZA ENG.	Anton Gallas	DATE START	3/10/06	DATE END	3/10/06

AS-BUILT

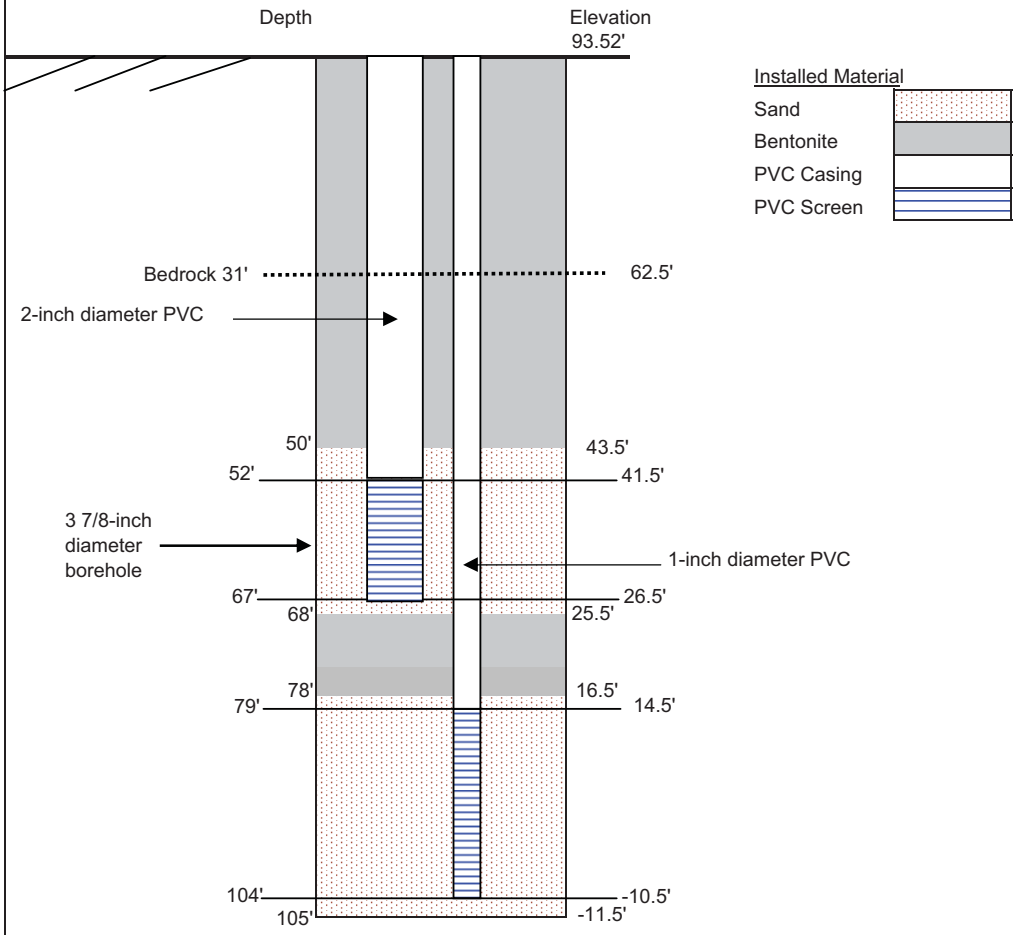

Notes:
1. Borehole above 34 feet is 4.5 inches in diameter.

GROUNDWATER OBSERVATION WELL INSTALLATION LOG

GZA GEOENVIRONMENTAL OF NEW YORK		REPORT OF BORING NO.	MW-45
440 NINTH AVENUE, 18TH FLOOR	ENTERGY	SHEET	1 of 1
NEW YORK, NEW YORK 10001	Indian Point Energy Center	FILE NO.	41.0017869.10
ENGINEERS AND SCIENTISTS	Buchanan, New York	CHKD BY	DW

BORING CO.	Aquifer Drilling & Testing	BORING LOCATION	See Exploration Location Plan		
FOREMAN	David Carter	GROUND SURFACE ELEV.	53.66'	DATUM	NGVD 29
GZA ENG.	Anton Gallas	DATE START	3/23/06	DATE END	3/23/06

AS-BUILT

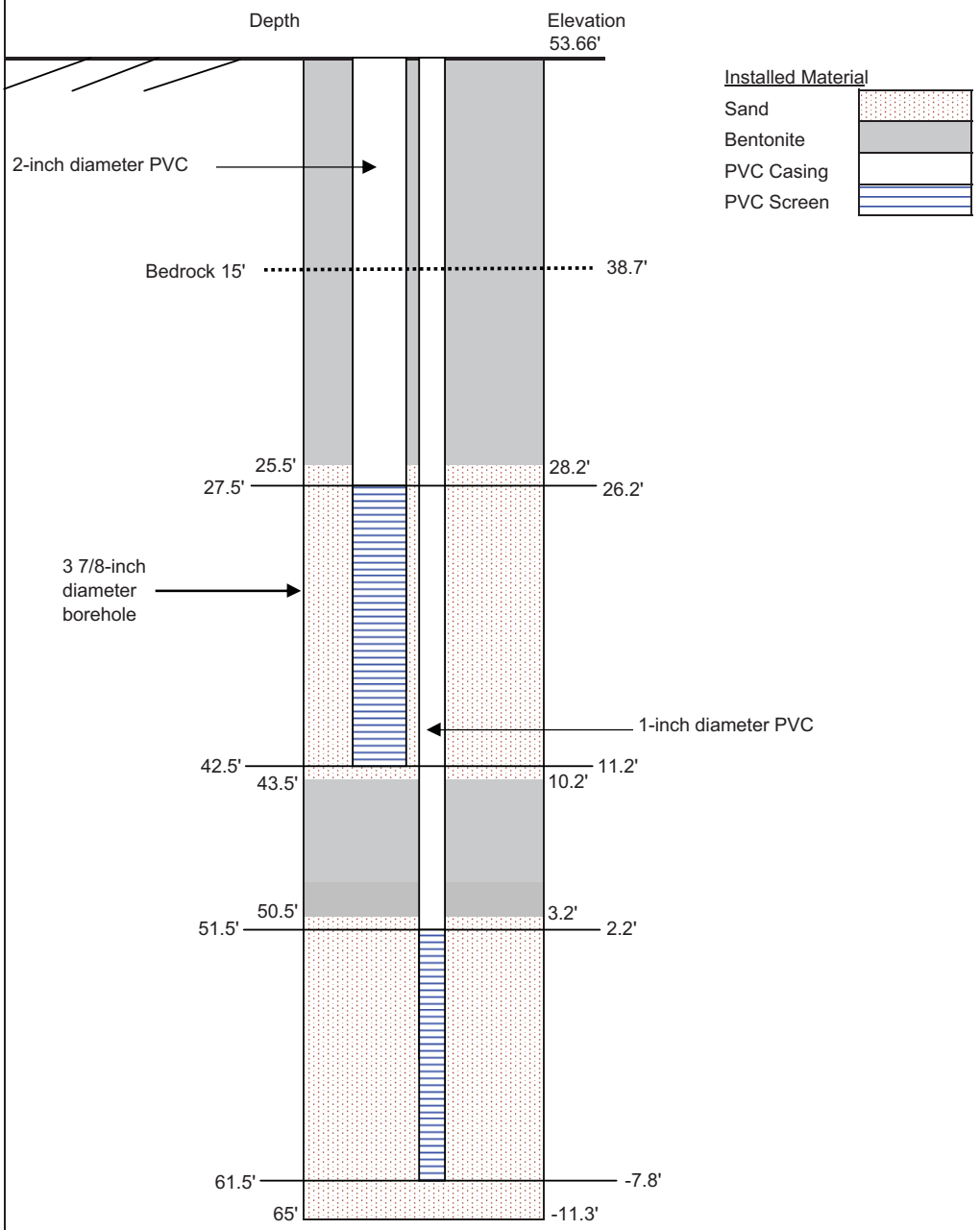

Notes:
1. Borehole above 16.5 feet is 4.5 inches in diameter.

OPEN ROCK WELL INSTALLATION LOG

GZA GEOENVIRONMENTAL OF NEW YORK		REPORT OF BORING NO.	MW-46
440 NINTH AVENUE, 18TH FLOOR	ENTERGY	SHEET	1 of 1
NEW YORK, NEW YORK 10001	Indian Point Energy Center	FILE NO.	41.0017869.10
ENGINEERS AND SCIENTISTS	Buchanan, New York	CHKD BY	DW

BORING CO.	Aquifer Drilling & Testing	BORING LOCATION	See Exploration Location Plan		
FOREMAN	David Carter	GROUND SURFACE ELEV.	18.08'	DATUM	NGVD 29
GZA ENG.	Anton Gallas	DATE START	2/14/06	DATE END	2/17/06

AS-BUILT

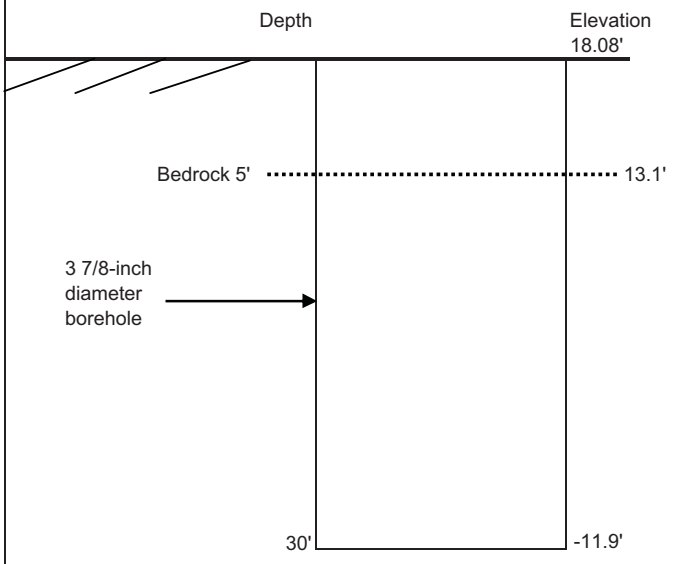

Notes:

1. No equipment installed. Boring left as an open borehole monitoring point.
2. Borehole above 6.5 feet is 4.5 inches in diameter.

GROUNDWATER OBSERVATION WELL INSTALLATION LOG

GZA GEOENVIRONMENTAL OF NEW YORK		REPORT OF BORING NO.	MW-47
440 NINTH AVENUE, 18TH FLOOR	ENTERGY	SHEET	1 of 1
NEW YORK, NEW YORK 10001	Indian Point Energy Center	FILE NO.	41.0017869.10
ENGINEERS AND SCIENTISTS	Buchanan, New York	CHKD BY	DW

BORING CO.	Aquifer Drilling & Testing	BORING LOCATION	See Exploration Location Plan		
FOREMAN	Dave Carter	GROUND SURFACE ELEV.	70.32'	DATUM	NGVD 29
GZA ENG.	Anton Gallas	DATE START	3/6/06	DATE END	3/6/06

AS-BUILT

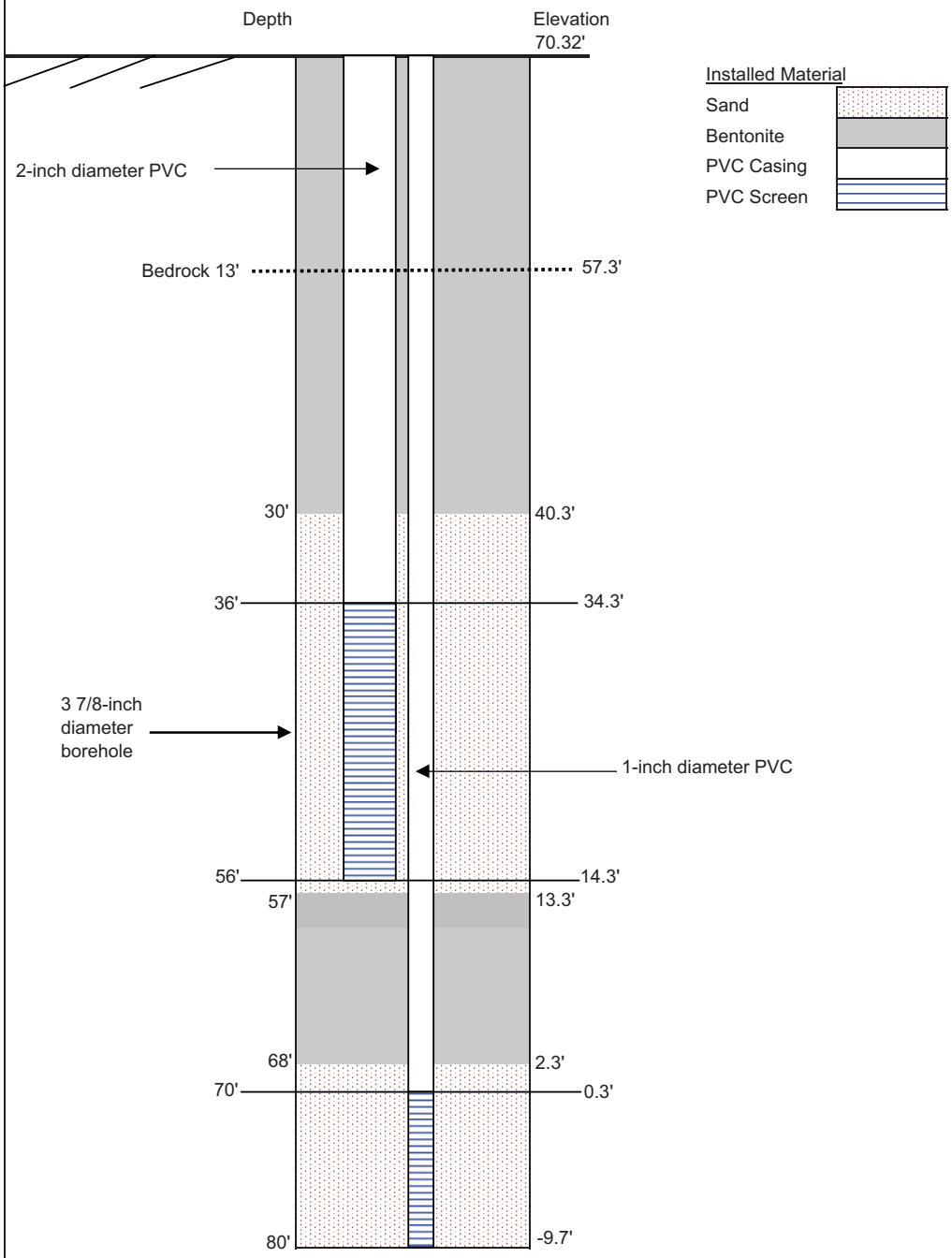

Notes:
1. Borehole above 14 feet is 6.5 inches in diameter.

GROUNDWATER OBSERVATION WELL INSTALLATION LOG

GZA GEOENVIRONMENTAL OF NEW YORK		REPORT OF BORING NO.	MW-48
440 NINTH AVENUE, 18TH FLOOR	ENTERGY	SHEET	1 of 1
NEW YORK, NEW YORK 10001	Indian Point Energy Center	FILE NO.	41.0017869.10
ENGINEERS AND SCIENTISTS	Buchanan, New York	CHKD BY	DW

BORING CO.	Aquifer Drilling & Testing	BORING LOCATION	See Exploration Location Plan		
FOREMAN	Doug Wood	GROUND SURFACE ELEV.	15.39'	DATUM	NGVD 29
GZA ENG.	Anton Gallas	DATE START	1/27/07	DATE END	1/27/07

AS-BUILT

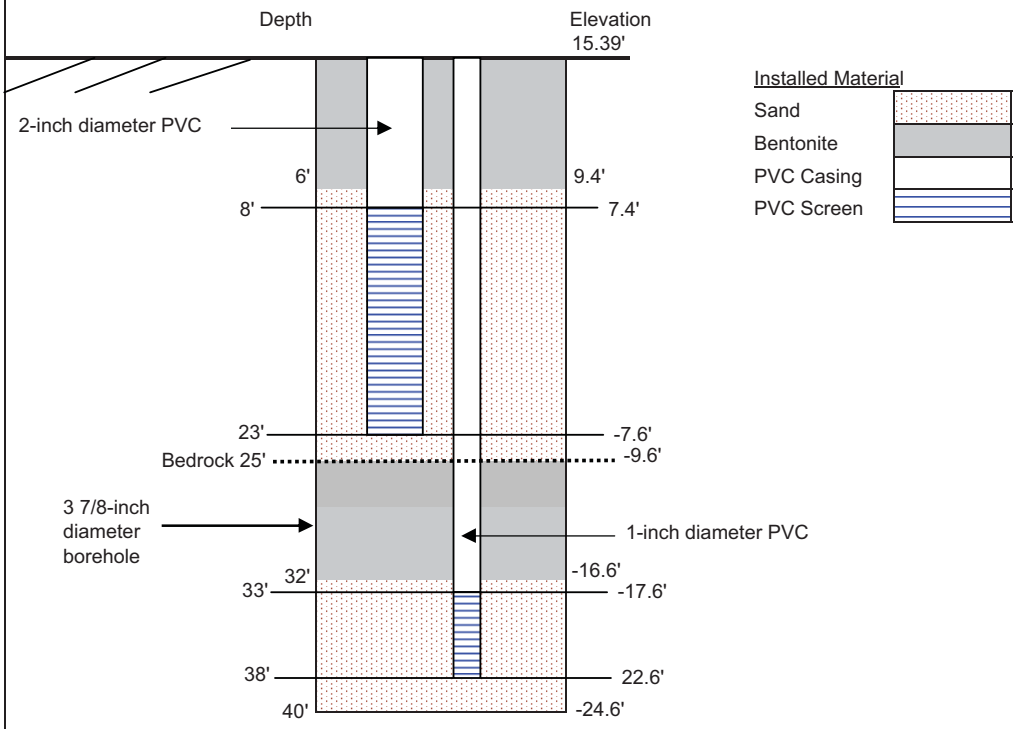

Notes:
1. Borehole above 25 feet is 4.5 inches in diameter.

GROUNDWATER OBSERVATION WELL INSTALLATION LOG

GZA GEOENVIRONMENTAL OF NEW YORK		REPORT OF BORING NO.	MW-49
440 NINTH AVENUE, 18TH FLOOR	ENTERGY	SHEET	1 of 1
NEW YORK, NEW YORK 10001	Indian Point Energy Center	FILE NO.	41.0017869.10
ENGINEERS AND SCIENTISTS	Buchanan, New York	CHKD BY	DW

BORING CO.	Aquifer Drilling & Testing	BORING LOCATION	See Exploration Location Plan		
FOREMAN	Dave Carter	GROUND SURFACE ELEV.	14.63'	DATUM	NGVD 29
GZA ENG.	Anton Gallas	DATE START	3/17/06	DATE END	3/17/06

AS-BUILT

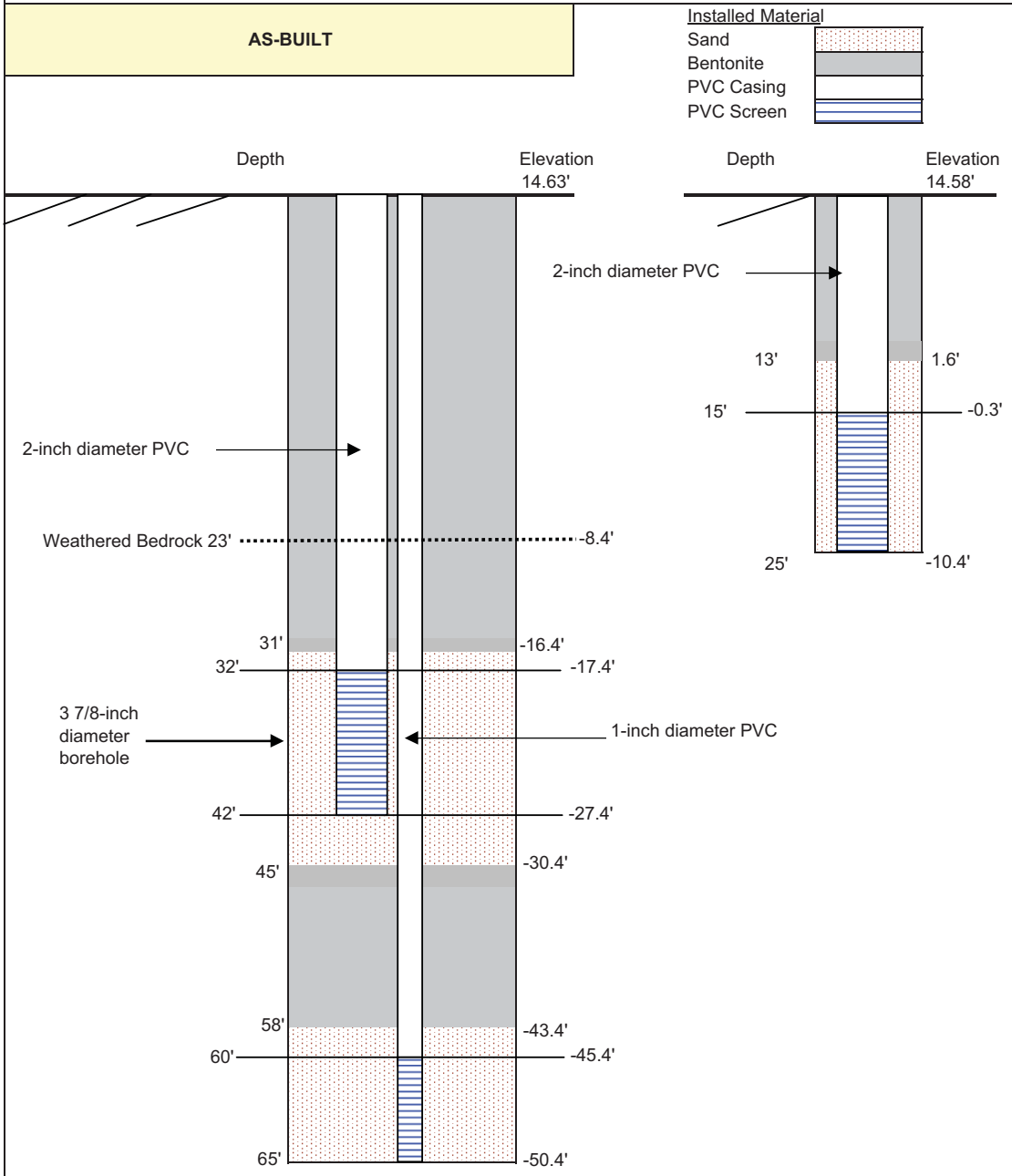

Notes:
1. Boreholes above 30 feet are 4.5 inches in diameter.
2. The 25-foot-deep well was installed adjacent to the nested wells.

GROUNDWATER OBSERVATION WELL INSTALLATION LOG

GZA GEOENVIRONMENTAL OF NEW YORK		REPORT OF BORING NO.	MW-50
440 NINTH AVENUE, 18TH FLOOR	ENTERGY	SHEET	1 of 1
NEW YORK, NEW YORK 10001	Indian Point Energy Center	FILE NO.	41.0017869.10
ENGINEERS AND SCIENTISTS	Buchanan, New York	CHKD BY	DW

BORING CO.	Aquifer Drilling & Testing	BORING LOCATION	See Exploration Location Plan		
FOREMAN	Dave Carter	GROUND SURFACE ELEV.	14.92'	DATUM	NGVD 29
GZA ENG.	Anton Gallas	DATE START	3/13/06	DATE END	3/13/06

AS-BUILT

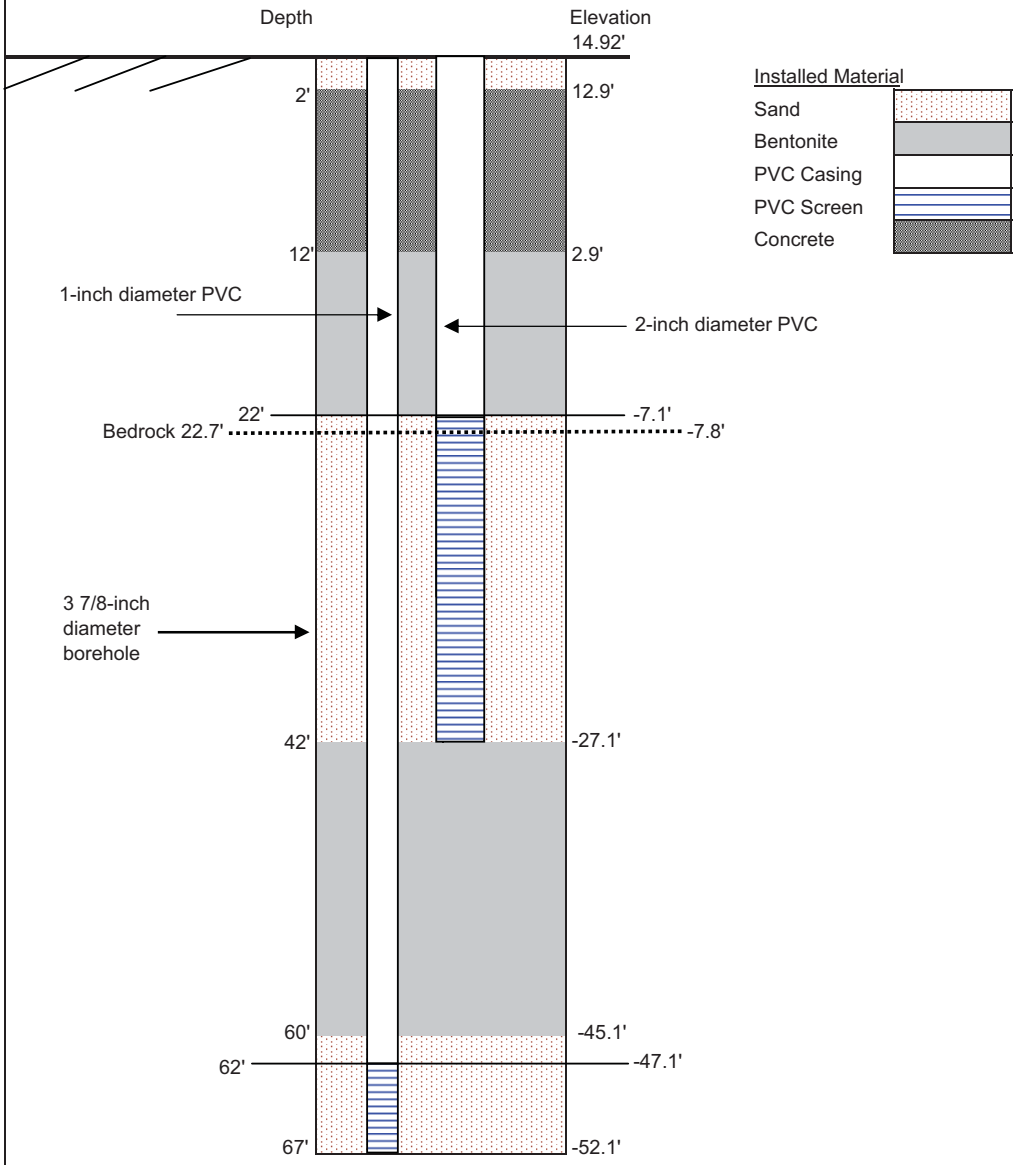

Notes:
1. Borehole above 6 feet is 4.5 inches in diameter.

GROUNDWATER OBSERVATION WELL INSTALLATION LOG

GZA GEOENVIRONMENTAL OF NEW YORK		REPORT OF BORING NO.	MW-52
440 NINTH AVENUE, 18TH FLOOR	ENTERGY	SHEET	1 of 1
NEW YORK, NEW YORK 10001	Indian Point Energy Center	FILE NO.	41.0017869.1(
ENGINEERS AND SCIENTISTS	Buchanan, New York	CHKD BY	DW

BORING CO.	Aquifer Drilling & Testing	BORING LOCATION	See Exploration Location Plar		
FOREMAN	Dave Carter	GROUND SURFACE ELEV.	16.77'	DATUM	NGVD 29
GZA ENG.	Anton Gallas/ Daniela Bastos	DATE START	3/21/06	DATE END	3/21/06

AS-BUILT

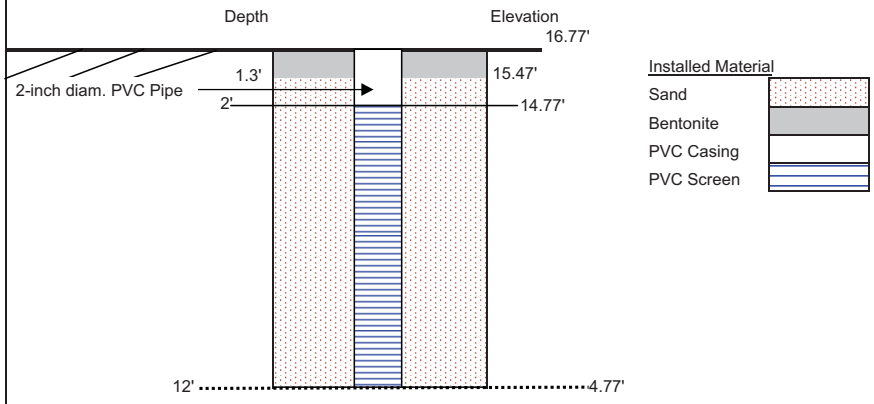

Notes:

1. Monitoring well is installed within the backfill of the trench excavated into rock for storm drain, fire and service water pipes

GROUNDWATER OBSERVATION WELL INSTALLATION LOG

GZA GEOENVIRONMENTAL OF NEW YORK		REPORT OF BORING NO.	T1-U1-1
440 NINTH AVENUE, 18TH FLOOR	ENTERGY	SHEET	1 of 1
NEW YORK, NEW YORK 10001	Indian Point Energy Center	FILE NO.	41.0017869.10
ENGINEERS AND SCIENTISTS	Buchanan, New York	CHKD BY	DW

BORING CO.	Aquifer Drilling & Testing	BORING LOCATION	See Exploration Location Plan		
FOREMAN	Ed Borner	GROUND SURFACE ELEV.	69.67'	DATUM	NGVD 29
GZA ENG.	Anton Gallas	DATE START	6/16/06	DATE END	6/16/06

AS-BUILT

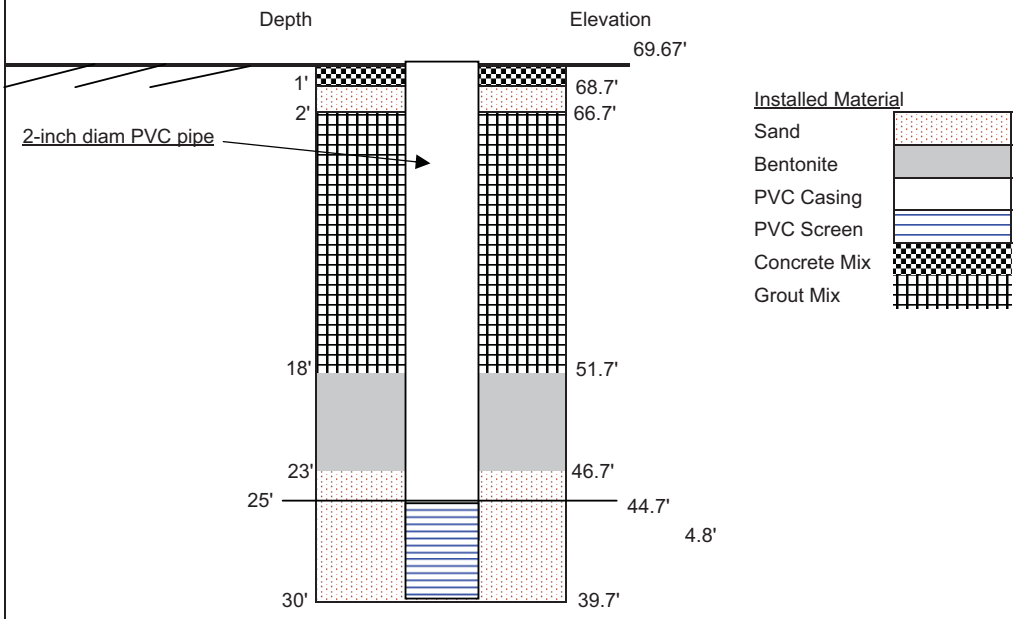

Notes:

GROUNDWATER OBSERVATION WELL INSTALLATION LOG

GZA GEOENVIRONMENTAL OF NEW YORK		REPORT OF BORING NO.	MW-53
440 NINTH AVENUE, 18TH FLOOR	ENTERGY	SHEET	1 of 1
NEW YORK, NEW YORK 10001	Indian Point Energy Center	FILE NO.	41.0017869.10
ENGINEERS AND SCIENTISTS	Buchanan, New York	CHKD BY	DW

BORING CO.	Aquifer Drilling & Testing	BORING LOCATION	See Exploration Location Plan		
FOREMAN	Ed Borner	GROUND SURFACE ELEV.	70.26'	DATUM	NGVD 29
GZA ENG.	Anton Gallas	DATE START	8/7/06	DATE END	8/7/06

AS-BUILT

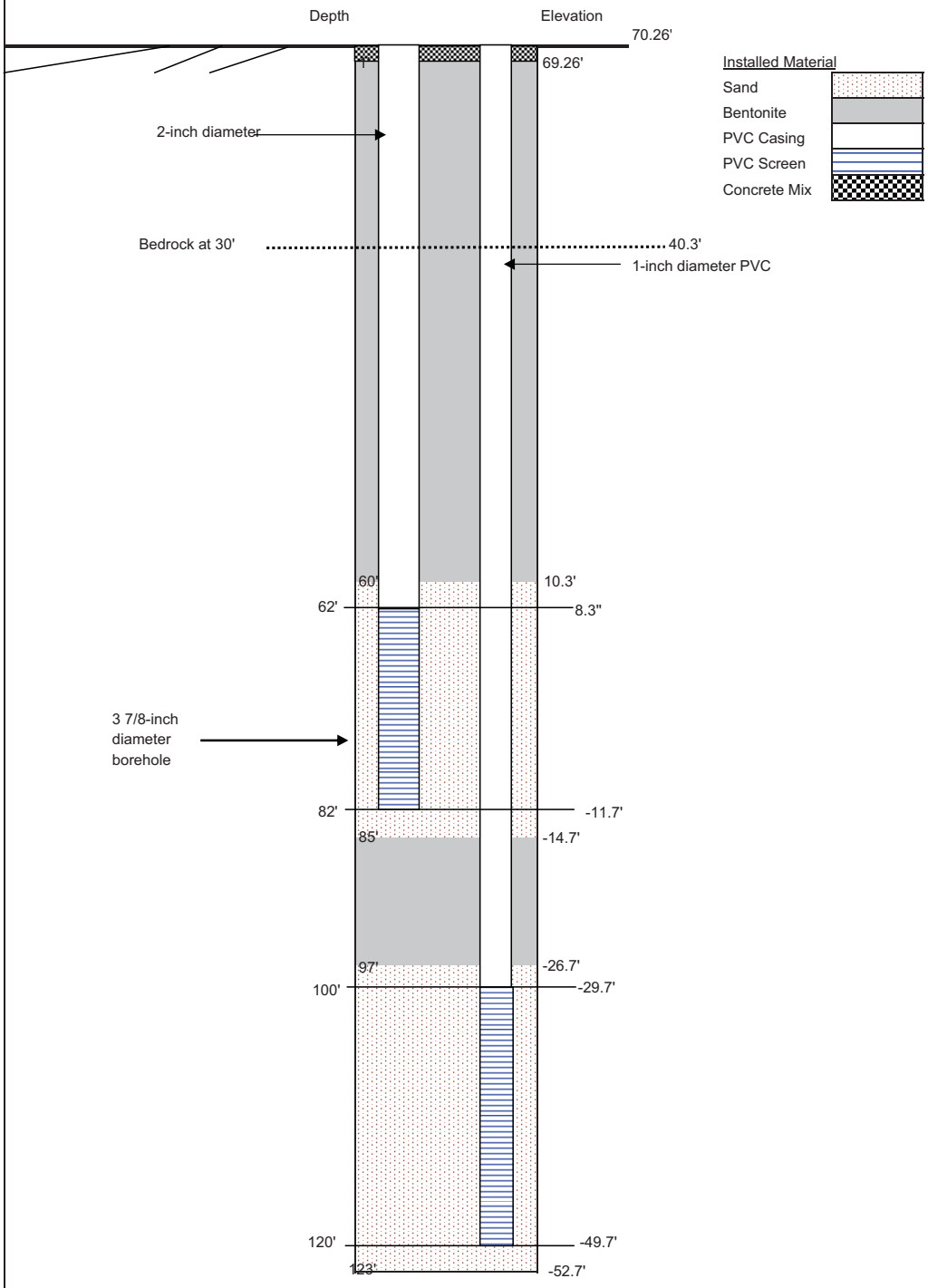

Notes:
1. Borehole above 37.5 feet is 5 1/2 inches in diameter

GROUNDWATER OBSERVATION WELL INSTALLATION LOG

GZA GEOENVIRONMENTAL OF NEW YORK		REPORT OF BORING NO.	MW-55
440 NINTH AVENUE, 18TH FLOOR	ENTERGY	SHEET	1 of 1
NEW YORK, NEW YORK 10001	Indian Point Energy Center	FILE NO.	41.0017869.10
ENGINEERS AND SCIENTISTS	Buchanan, New York	CHKD BY	DW

BORING CO.	Aquifer Drilling & Testing	BORING LOCATION	See Exploration Location Plan		
FOREMAN	Ed Borner	GROUND SURFACE ELEV.	18.25'	DATUM	NGVD 29
GZA ENG.	Anton Gallas	DATE START	9/22/06	DATE END	9/22/06

AS-BUILT

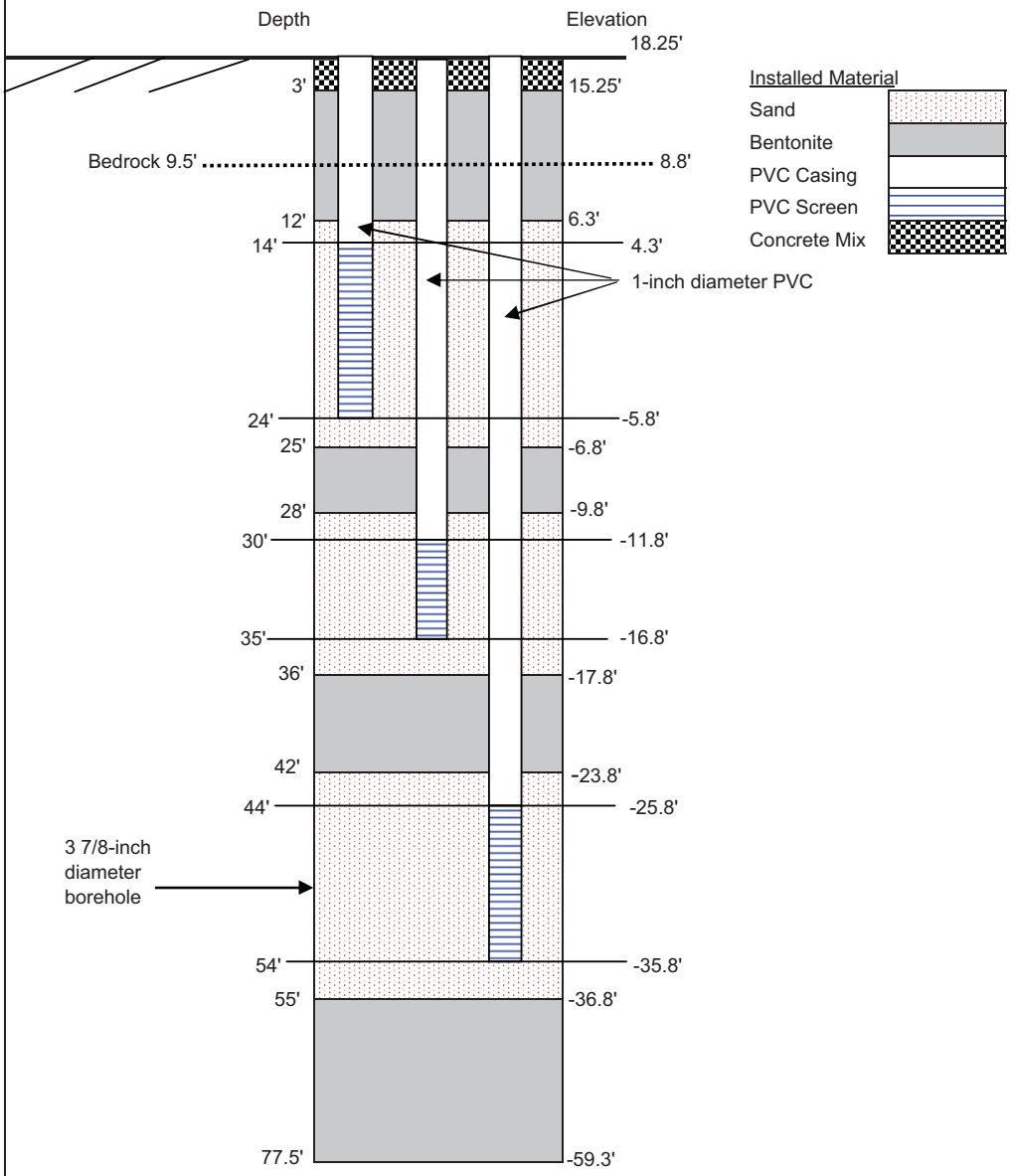

Notes:
1. Borehole above 11.5 feet is 4 1/2 inches in diameter.

GROUNDWATER OBSERVATION WELL INSTALLATION LOG

GZA GEOENVIRONMENTAL OF NEW YORK		REPORT OF BORING NO.	MW-56
440 NINTH AVENUE, 18TH FLOOR	ENTERGY	SHEET	1 of 1
NEW YORK, NEW YORK 10001	Indian Point Energy Center	FILE NO.	41.0017869.10
ENGINEERS AND SCIENTISTS	Buchanan, New York	CHKD BY	DW

BORING CO.	Aquifer Drilling & Testing	BORING LOCATION	See Exploration Location Plan		
FOREMAN	Ed Borner	GROUND SURFACE ELEV.	70.26'	DATUM	NGVD 29
GZA ENG.	Maurice Ponti	DATE START	12/11/06	DATE END	12/11/06

AS-BUILT

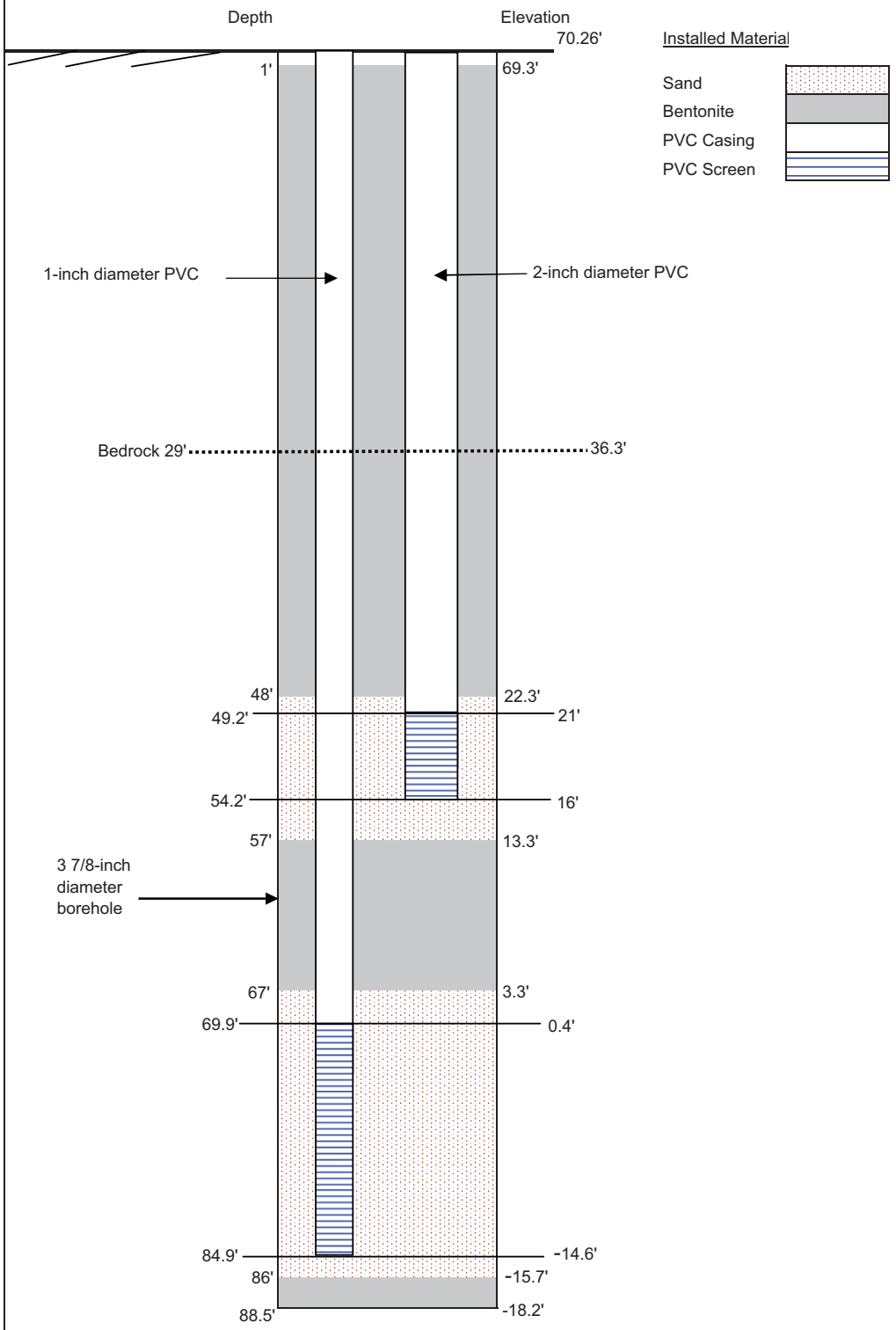

Notes:
1. Borehole above 31 feet is 4 1/2 inches in diameter.
2. 2-foot by 2-foot by 2-foot well vault installed within concrete, flush with ground surface.

GROUNDWATER OBSERVATION WELL INSTALLATION LOG

GZA GEOENVIRONMENTAL OF NEW YORK		REPORT OF BORING NO.	MW-57
440 NINTH AVENUE, 18TH FLOOR	ENTERGY	SHEET	1 of 1
NEW YORK, NEW YORK 10001	Indian Point Energy Center	FILE NO.	41.0017869.10
ENGINEERS AND SCIENTISTS	Buchanan, New York	CHKD BY	DW

BORING CO.	Aquifer Drilling & Testing	BORING LOCATION	See Exploration Location Plan		
FOREMAN	Dave Carter	GROUND SURFACE ELEV.	14.98'	DATUM	NGVD 29
GZA ENG.	Maurcie Ponti	DATE START	8/31/06	DATE END	8/31/06

AS-BUILT

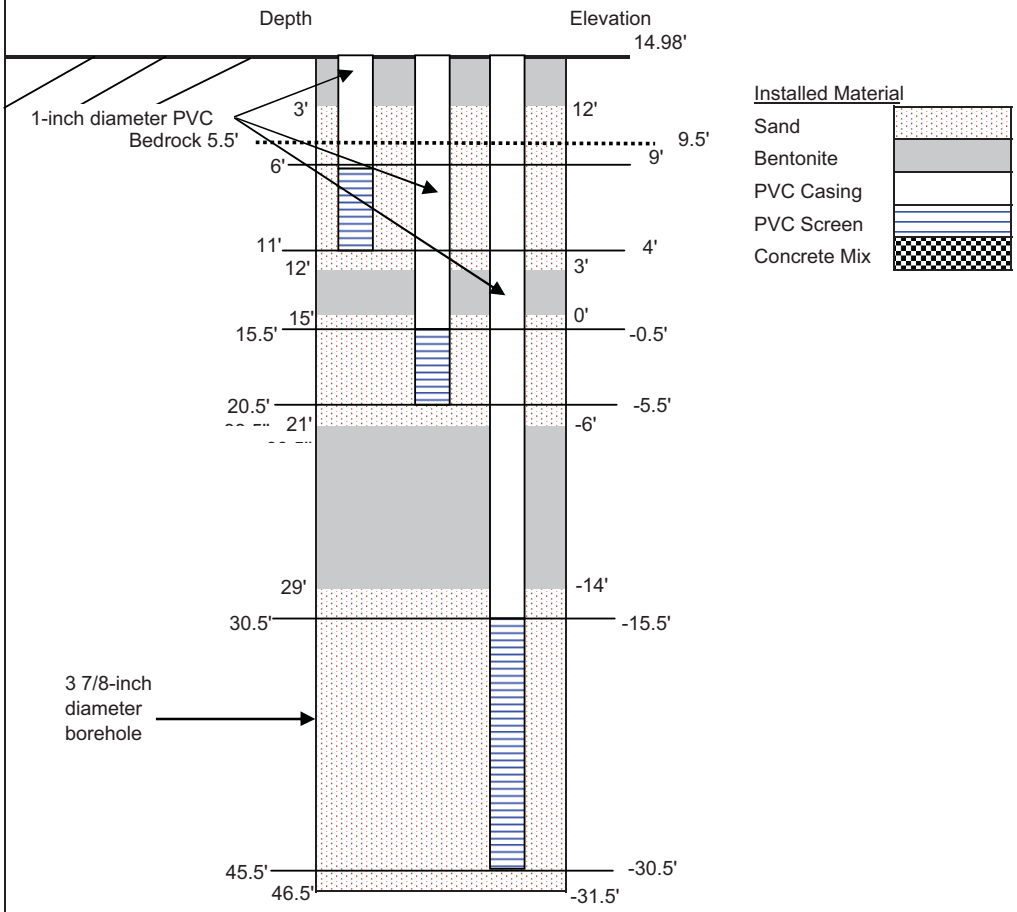

Notes:
1. Borehole above 7 feet is 4 1/2 inches in diameter.

GROUNDWATER OBSERVATION WELL INSTALLATION LOG

GZA GEOENVIRONMENTAL OF NEW YORK		REPORT OF BORING NO.	MW-58
440 NINTH AVENUE, 18TH FLOOR	ENTERGY	SHEET	1 of 1
NEW YORK, NEW YORK 10001	Indian Point Energy Center	FILE NO.	41.0017869.10
ENGINEERS AND SCIENTISTS	Buchanan, New York	CHKD BY	DW

BORING CO.	Aquifer Drilling & Testing	BORING LOCATION	See Exploration Location Plan		
FOREMAN	Ed Borner	GROUND SURFACE ELEV.	14.57'	DATUM	NGVD 29
GZA ENG.	Anton Gallas	DATE START	9/25/06	DATE END	9/25/06

AS-BUILT

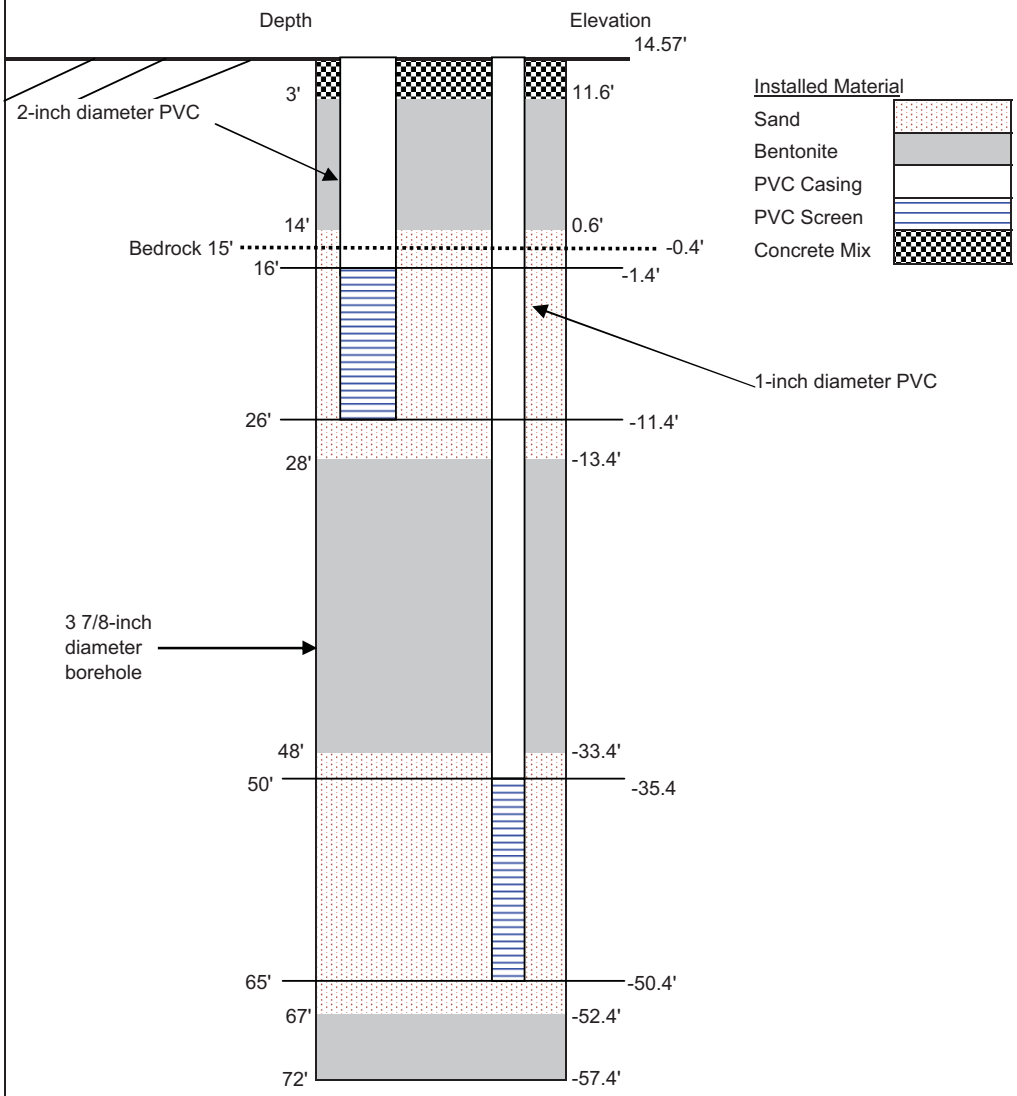

Notes:
1. Borehole above 16.5 feet is 4 1/2 inches in diameter.
2. 2-foot by 2-foot by 2-foot well vault installed within concrete, flush with ground surface.

GROUNDWATER OBSERVATION WELL INSTALLATION LOG

GZA GEOENVIRONMENTAL OF NEW YORK		REPORT OF BORING NO.	MW-59
440 NINTH AVENUE, 18TH FLOOR	ENTERGY	SHEET	1 of 1
NEW YORK, NEW YORK 10001	Indian Point Energy Center	FILE NO.	41.0017869.10
ENGINEERS AND SCIENTISTS	Buchanan, New York	CHKD BY	DW

BORING CO.	Aquifer Drilling & Testing	BORING LOCATION	See Exploration Location Plan		
FOREMAN	Ed Borner	GROUND SURFACE ELEV.	14.52'	DATUM	NGVD 29
GZA ENG.	Anton Gallas	DATE START	10/4/07	DATE END	10/4/07

AS-BUILT

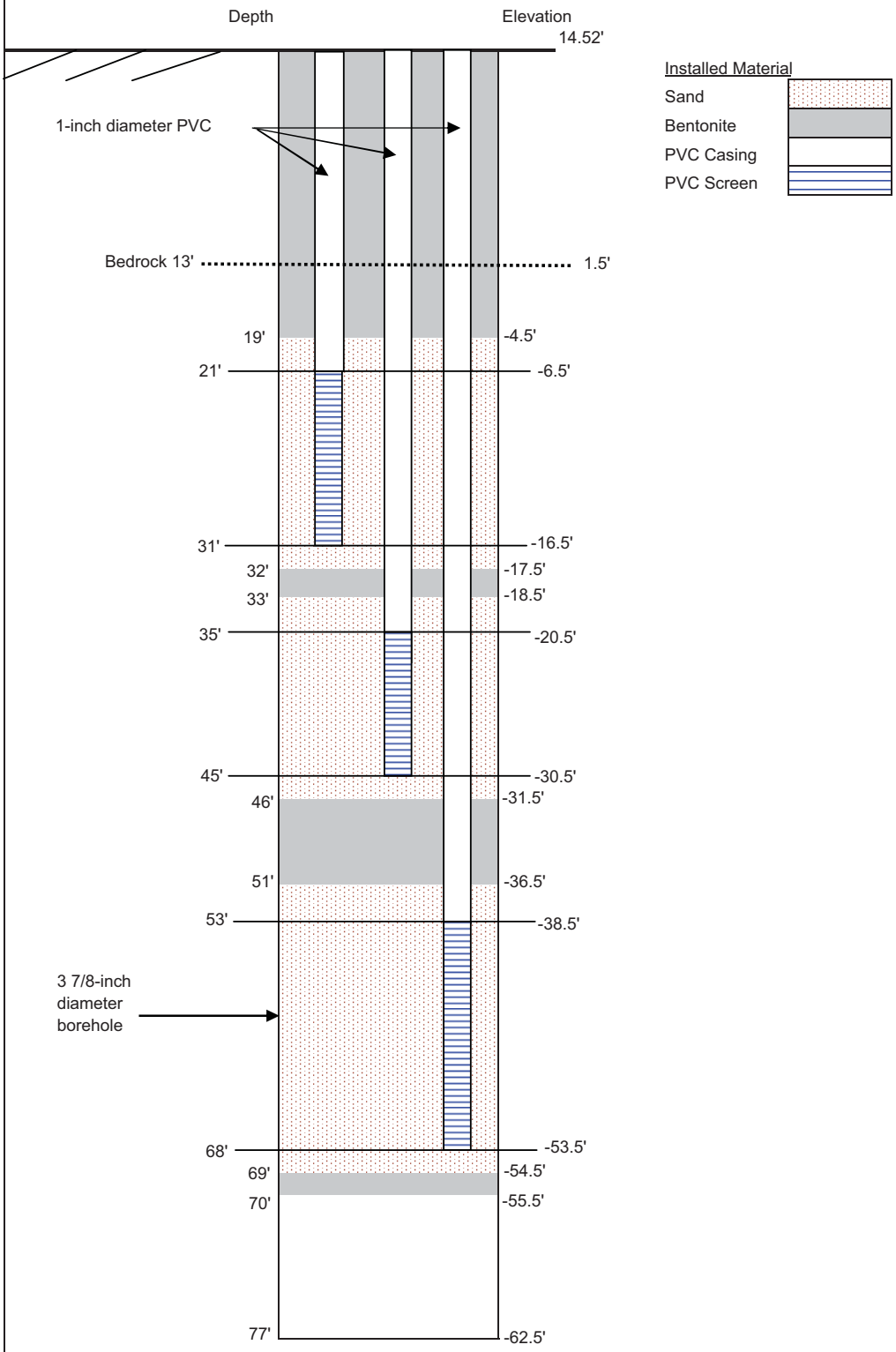

Notes:
1. Borehole above 18 feet is 4 1/2 inches in diameter.
2. 2-foot by 2-foot by 2-foot well vault installed within concrete, flush with ground surface.

GROUNDWATER OBSERVATION WELL INSTALLATION LOG

GZA GEOENVIRONMENTAL OF NEW YORK		REPORT OF BORING NO.	MW-62
440 NINTH AVENUE, 18TH FLOOR	ENTERGY	SHEET	1 of 1
NEW YORK, NEW YORK 10001	Indian Point Energy Center	FILE NO.	41.0017869.10
ENGINEERS AND SCIENTISTS	Buchanan, New York	CHKD BY	DW

BORING CO.	Aquifer Drilling & Testing	BORING LOCATION	See Exploration Location Plan		
FOREMAN	Ed Borner	GROUND SURFACE ELEV.	14.69'	DATUM	NGVD 29
GZA ENG.	Anton Gallas	DATE START	10/12/07	DATE END	10/12/07

AS-BUILT

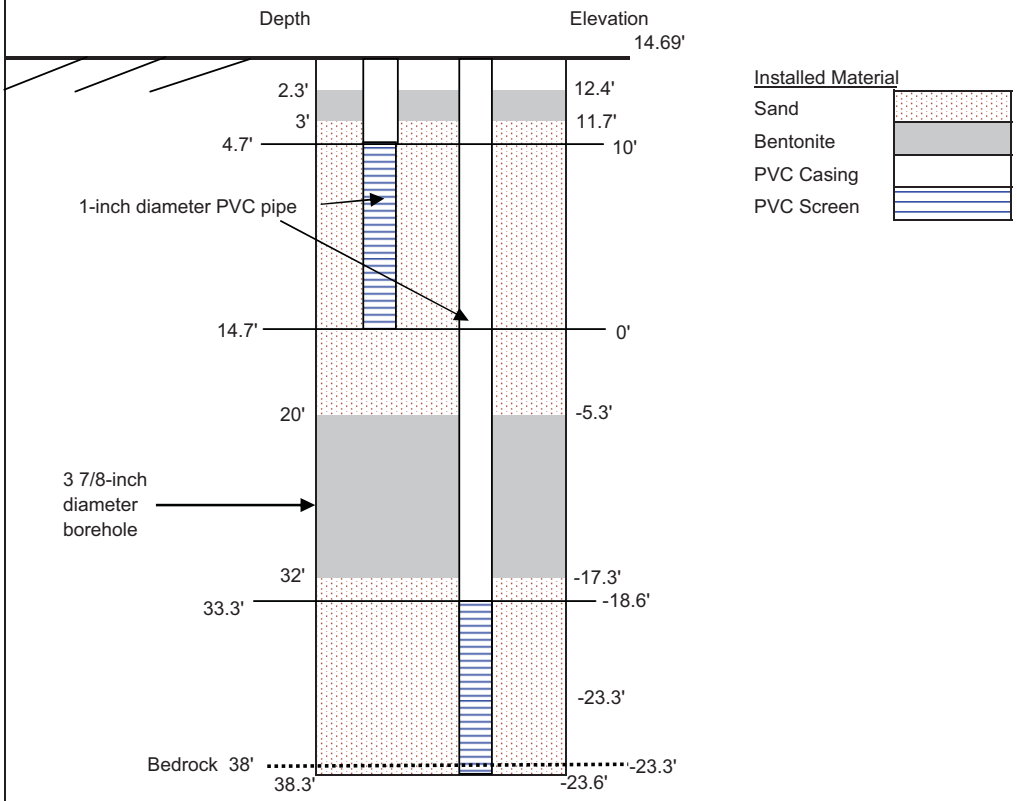

Notes:
1. 2-foot by 2-foot by 2-foot well vault installed within concrete, flush with ground surface.
2. Monitoring wells installed in the overburden soils adjacent to the 201-foot boring.

GROUNDWATER OBSERVATION WELL INSTALLATION LOG

GZA GEOENVIRONMENTAL OF NEW YORK		REPORT OF BORING NO.	MW-63
440 NINTH AVENUE, 18TH FLOOR	ENTERGY	SHEET	1 of 1
NEW YORK, NEW YORK 10001	Indian Point Energy Center	FILE NO.	41.0017869.10
ENGINEERS AND SCIENTISTS	Buchanan, New York	CHKD BY	DW

BORING CO.	Aquifer Drilling & Testing	BORING LOCATION	See Exploration Location Plan		
FOREMAN	Ed Borner	GROUND SURFACE ELEV.	14.18'	DATUM	NGVD 29
GZA ENG.	Anton Gallas	DATE START	9/20/06	DATE END	9/20/06

AS-BUILT

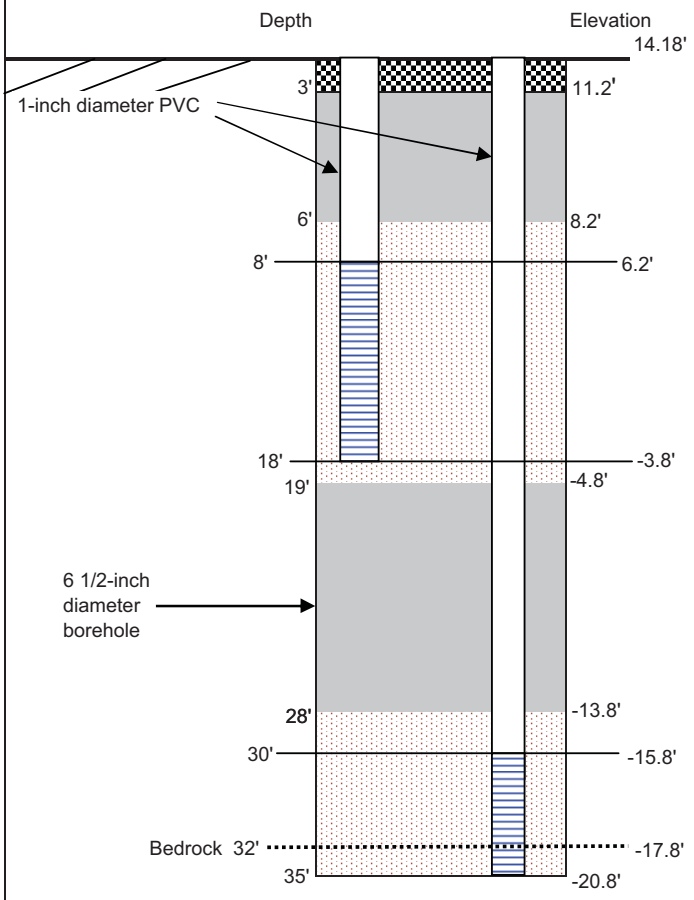

Installed Material
- Sand
- Bentonite
- PVC Casing
- PVC Screen
- Concrete Mix

Notes:
1. 2-foot by 2-foot by 2-foot well vault installed within concrete, flush with ground surface.
2. Monitoring wells installed in the overburden soils adjacent to the 193-foot boring.

GROUNDWATER OBSERVATION WELL INSTALLATION LOG

GZA GEOENVIRONMENTAL OF NEW YORK		REPORT OF BORING NO.	MW-65
440 NINTH AVENUE, 18TH FLOOR	ENTERGY	SHEET	1 of 1
NEW YORK, NEW YORK 10001	Indian Point Energy Center	FILE NO.	41.0017869.10
ENGINEERS AND SCIENTISTS	Buchanan, New York	CHKD BY	DW

BORING CO.	Aquifer Drilling & Testing	BORING LOCATION	See Exploration Location Plan		
FOREMAN	Ed Borner	GROUND SURFACE ELEV.	69.72'	DATUM	NGVD 29
GZA ENG.	Angela Hough	DATE START	12/12/06	DATE END	12/12/06

AS-BUILT

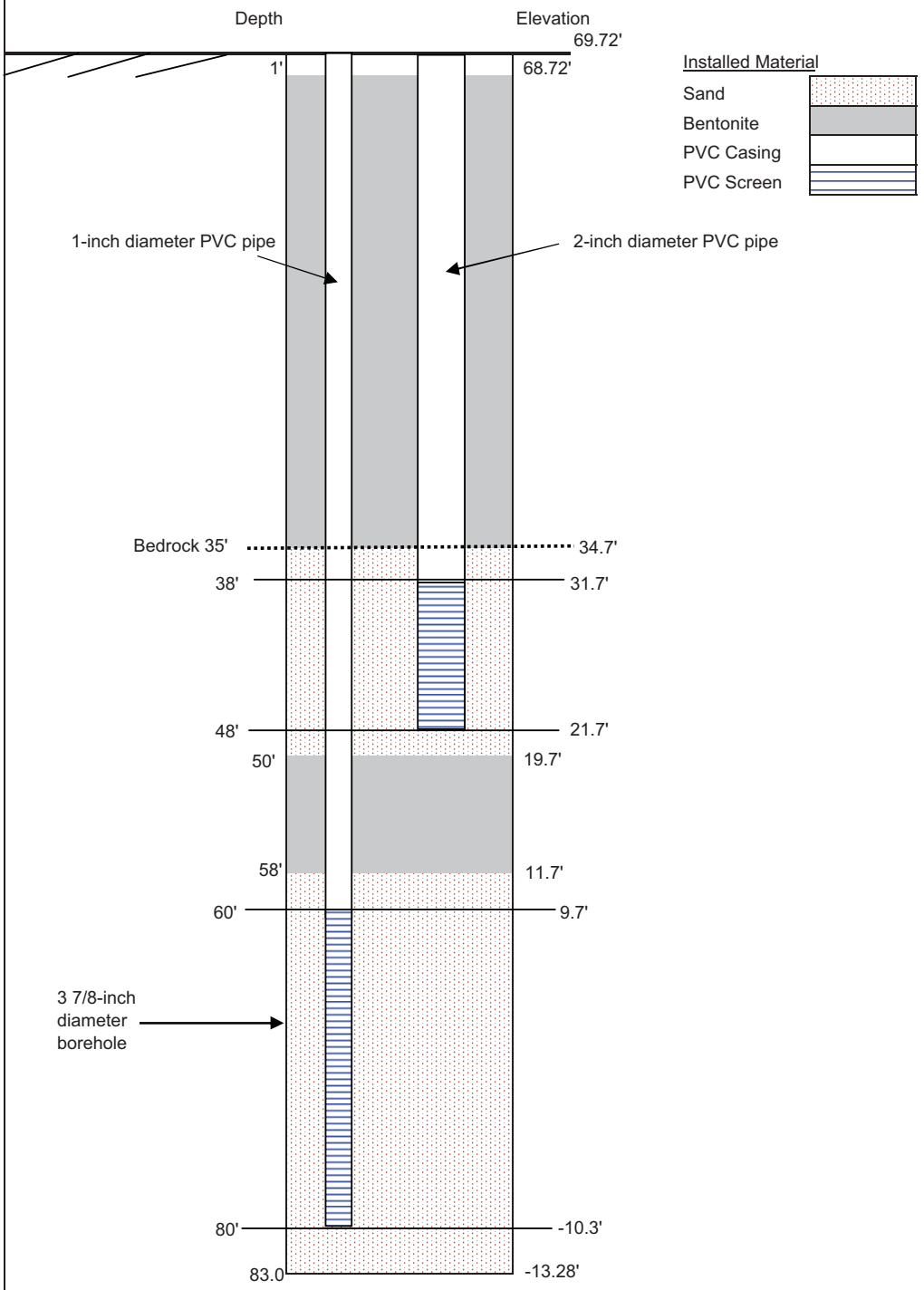

Notes:
1. Borehole above 38 feet is 4 1/2-inches in diameter.
2. 2-foot by 2-foot by 2-foot well vault installed within concrete, flush with ground surface.

GROUNDWATER OBSERVATION WELL INSTALLATION LOG

GZA GEOENVIRONMENTAL OF NEW YORK		REPORT OF BORING NO.	MW-66
440 NINTH AVENUE, 18TH FLOOR	ENTERGY	SHEET	1 of 1
NEW YORK, NEW YORK 10001	Indian Point Energy Center	FILE NO.	41.0017869.10
ENGINEERS AND SCIENTISTS	Buchanan, New York	CHKD BY	DW

BORING CO.	Aquifer Drilling & Testing	BORING LOCATION	See Exploration Location Plan		
FOREMAN		GROUND SURFACE ELEV.	14.02 feet	DATUM	NGVD 29
GZA ENG.	Neils Jensen	DATE START	07/05/07	DATE END	07/05/07

AS-BUILT

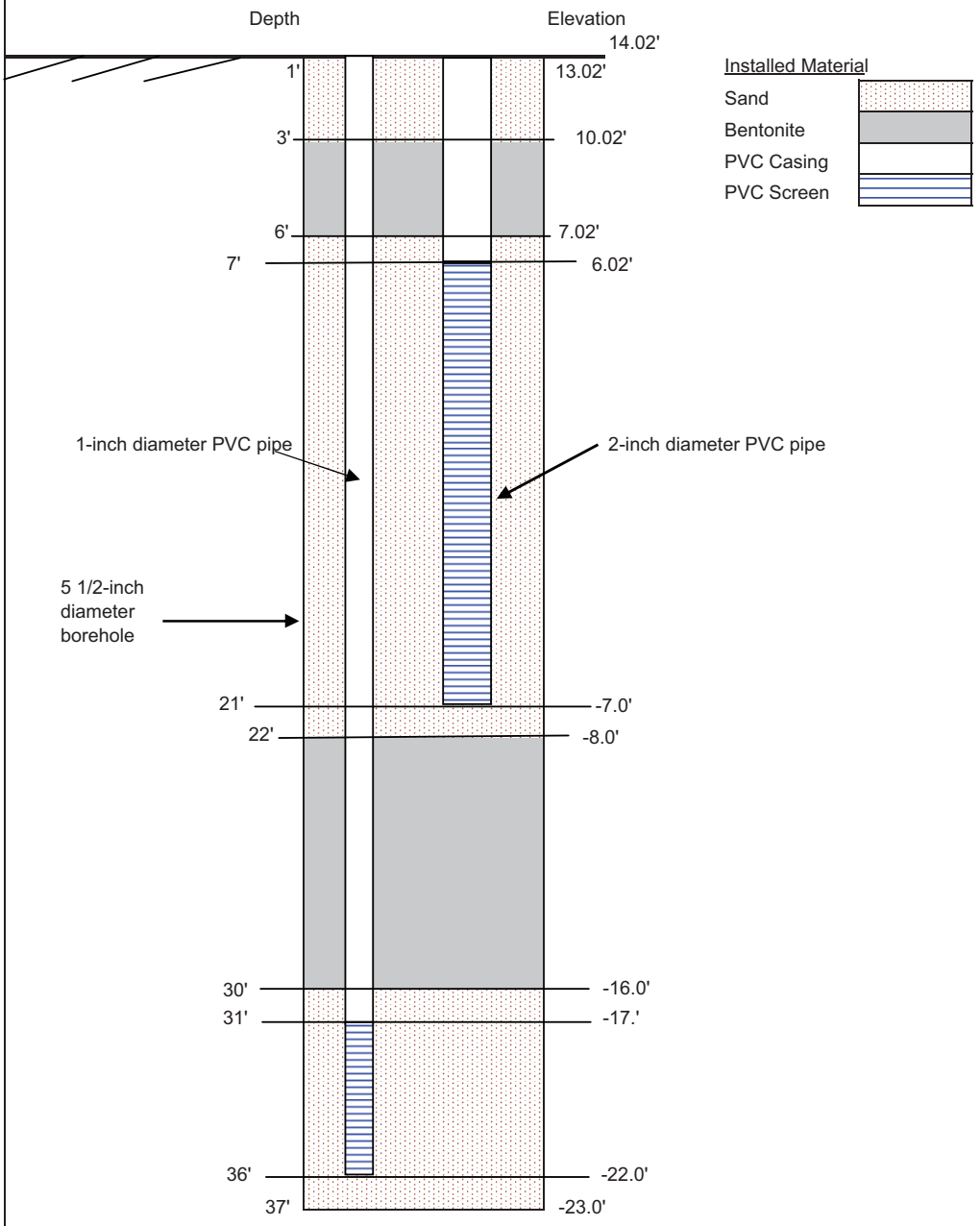

Notes:
1. Top of bedrock is at 37 feet.
2. 2-foot by 2-foot by 2-foot well vault installed within concrete, flush with ground surface.

APPENDIX E – SURVEY RESULTS

DECEMBER 2005

B&W --- AS ORIGINALLY DELIVERED

PNT#	NORTH	EAST	ELEV	REMARKS
5602	462505.7	603810.2	14	MW-38
5603	462778.3	604293.1	14.6	U3-3
5604	462772.3	604262.3	14.1	U3-2
5605	462762.5	604197.3	13.5	U3-1
5606	462723.8	604167.7	14.5	U3-40
5607	462711.1	604158.9	13.9	U3-45
5609	462860.9	604396.9	14.2	MW-109
5610	462819.6	604454.1	14.2	MW-108
5611	462962.2	604744.2	18.4	MW-35
5612	462976.8	604755.3	18.1	MW-34
5613	462995.5	604767.9	18.6	MW-33
5614	463023.6	604735.2	19.4	MW-11
5615	462969.8	604924.2	79.6	MW-31
5616	462953.5	604876	78.3	MW-32
5617	461922.7	605014.2	142.8	MW-107
5618	461923.1	605014	140.1	GROUND AT MW-107
5619	461578.5	604888.1	136.8	MW-112 PVC BROKEN AT GROUND LEVEL

THE FOLLOWING IS PROVIDED WITH THE CAVEAT THAT THE PRECISION INDICATED IS GREATER THAN THE ACTUAL PRECISION OF THE SURVEY DATA.

B&W --- AS COMPUTED TO 4 DECIMAL PLACES

PNT#	NORTH	EAST	ELEV	REMARKS
5602	462505.7	603810.2	13.99	MW-38
5603	462778.3	604293.1	14.599	U3-3
5604	462772.3	604262.3	14.114	U3-2
5605	462762.5	604197.3	13.495	U3-1
5606	462723.8	604167.7	14.519	U3-40
5607	462711.1	604158.9	13.943	U3-45
5608	462973.1	604270.5	14.217	B_PK-OL (BENCHMARK)
5609	462860.9	604396.9	14.254	MW-109
5610	462819.6	604454.1	14.23	MW-108
5611	462962.2	604744.2	18.444	MW-35
5612	462976.8	604755.3	18.071	MW-34
5613	462995.5	604767.9	18.619	MW-33
5614	463023.6	604735.2	19.385	MW-11
5615	462969.8	604924.2	79.593	MW-31
5616	462953.5	604876	78.339	MW-32
5617	461922.7	605014.2	142.757	MW-107
5618	461923.1	605014	140.061	GROUND AT MW-107
5619	461578.5	604888.1	136.773	MW-112

MARCH 2006

PNT#	NORTH	EAST	ELEV	REMARKS
4513	463090.6	604657.6	11.393	MW-36-S
4514	463090.4	604657.5	11.604	MW-36-I
4515	463090.4	604657.5	11.492	MW-36D
4516	463075.2	604604.8	14.725	MW-37-S
4517	463075.3	604604.6	14.79	MW-37-I
4518	463075.1	604604.7	14.723	MW-37-D
4519	463075.4	604604.9	14.784	MW-37-22
4520	462555	604133	8.518	U3-T1
4521	462555	604133	3.267	GROUND AT U3-T1
4522	462673.8	604240.6	8.512	U3-T2
4523	462673.8	604240.6	3.259	GROUND AT U3-T2
4524	463140.2	604709.6	12.707	MH-4A
4525	463219	604772.6	16.949	MH-4
4526	463305.5	604663.9	14.847	MH-3
4527	462425.5	604676.9	81.452	MW-39
4528	462425.8	604676.4	81.864	GROUND AT MW-39
4530	462192.6	604429.7	47.821	MW-43-D
4531	462192.6	604429.8	48.021	MW-43-S
4532	462192.3	604430.1	48.761	GROUND AT MW43
4533	462015.7	603473.8	14.765	MW-48-D
4534	462015.7	603473.8	14.762	MW-48-S
4535	462016	603473.5	15.394	GROUND AT MW48
4536	461950.5	603899.3	74.758	MW-40
4537	461950.9	603899.5	74.987	GROUND AT MW40

APRIL 2006 #1

PNT#	NORTH	EAST	ELEV	REMARKS
4538	462750.3	604857.5	69.42	MW42
4539	462750	604858	69.71	GROUND AT MW42
4542	463078.8	604446.7	14.13	MW49
4543	463079.4	604447.3	14.65	GROUND AT MW49
4544	463039.2	604494.3	14.41	MW50
4545	463038.7	604493.8	14.92	GROUND AT MW50
4546	462431.3	604328.7	16.97	MW46
4547	462430.9	604328.2	18.08	GROUND AT MW46
4548	463254.1	604733	16.33	MW52
4549	463253.8	604732.7	16.77	GROUND AT MW52
4550	462499.9	604516.2	92.96	MW44-102
4551	462499.9	604516.4	93.02	MW44-66
4552	462499.9	604517.1	93.52	GROUND AT MW44
4553	462663.6	604651.4	69.8	MW47
4554	462663.9	604651	70.32	GROUND AT MW47
4555	462385.9	604471.5	52.94	MW45
4556	462386.3	604471.1	53.66	GROUND AT MW45
4557	462318.7	604531.1	54.13	MW41
4558	462318.5	604531.6	54.87	GROUND AT MW41
4559	461822.4	604275.3	69.34	MW51
4560	461821.9	604275.3	69.62	GROUND MW51

APRIL 2006 #2

PNT#	NORTH	EAST	ELEV	REMARKS
4565	462385.6	604472.1	53.1	MW45-62
4566	462385.5	604472	53.2	MW45-43
4556	462386.3	604471.1	53.66	GROUND AT MW45
4562	462664.1	604651.1	69.81	MW47-57
4563	462663.9	604650.9	69.74	MW47-80
4554	462663.9	604651	70.32	GROUND AT MW47
4573	463039.2	604494.3	14.43	MW50-42
4574	463039.3	604494.2	14.61	MW50-67
4545	463038.7	604493.8	14.92	GROUND AT MW50
4576	463080.2	604445.6	14.19	MW49-26
4577	463079	604446.4	14.37	ME49-66
4578	463078.8	604446.6	14.13	MW49-42
4543	463079.4	604447.3	14.65	GROUND AT MW49
4568	463253.9	604733	16.37	MW52-200
4569	463254.3	604733.5	16.28	MW52-13
4549	463253.8	604732.7	16.77	GROUND AT MW52
4571	462164.1	603420.5	11.91	OUT-1
4572	463079.2	604642.4	15.05	U2-C1
4561	463122.6	604280.7	18.52	HR-1

NOVEMBER 2006

PNT#	NORTH	EAST	ELEV	REMARKS
4581	462864	604399.9	14.23	MW58-D
4582	462863.8	604399.7	14.14	MW58-S
4583	462864.3	604400.3	14.57	GROUND AT MW59
4584	462912.1	604329.1	13.93	MW59-45
4585	462912	604329	14.31	MW59-31
4586	462911.9	604329	14.15	MW59-68
4587	462912.9	604330.1	14.52	GROUND AT MW59
4588	463087.4	604349.9	12.82	MW62
4589	463086.8	604350.8	14.69	GROUND AT MW62
4590	463382.5	604586.5	12.48	MW60
4591	463381.3	604585.6	14.31	GROUND AT MW 60
4592	463023.8	604735.2	18.38	MW111
4593	463023.8	604735.9	18.93	GROUND AT MW111
4594	462997.2	604636.5	17.67	MW55-24
4595	462997.2	604636.5	17.67	MW55-35
4596	462997	604636.5	17.68	MW55-54
4597	462996.4	604636	18.25	GROUND AT MW55
4598	462707.7	604658.9	68.56	MW56
4599	462708.5	604658.1	70.26	GROUND AT MW56
4601	462490.2	604850.7	67.92	MW65
4602	462489.7	604852	69.72	GROUND AT MW65
4604	462741.1	604858.1	69.32	T1-U1-1
4605	462741.8	604858	69.67	GROUND AT T1-U1-1
4606	462821.5	604732.1	69.93	MW53-D
4607	462821.7	604732.3	70.06	MW53-S
4608	462822.2	604732.6	70.26	GROUND AT MW53
4611	462935.7	604551.9	14.76	MW54
4612	462935.6	604554.2	14.99	GROUND AT MW54
4613	462888.7	604562.9	14.63	MW57-11
4614	462888.7	604562.8	14.61	MW57-45
4615	462888.9	604562.9	14.64	MW57-20
4616	462888.6	604562.4	14.98	GROUND AT MW57
4618	463012.4	604885.1	78.47	MW30
4619	463006.7	604879.2	81.28	RW-1
4620	462996.8	604885.3	72.69	GROUND AT MW30 AND RW-1
4622	463188.4	604790.3	18.54	MH5
4623	463189.6	604790.6	18.53	GROUND AT MH5
4624	463220.6	605072.2	82.23	I-2
4625	463218.2	605072.4	80.92	GROUND AT I-2

JANUARY 2007

PNT#	NORTH	EAST	ELEV	REMARKS
5621	462490.2	604850.6	68.856	MW65-48
5622	462490.2	604850.8	68.841	MW65-80
5623	462489.6	604851.7	69.723	GROUND AT MW65
5624	462707.5	604658.9	69.207	MW56-85
5625	462707.4	604659.1	69.322	MW56-54
5626	462708.2	604658.1	70.258	GROUND AT MW56
5627	462425.6	604677	79.992	MW39
5628	462424.9	604675.8	81.827	GROUND AT MW39
5629	463147.4	604409.2	12.155	MW66
5630	463150.3	604409.2	14.021	GROUND AT MW66
5631	462970.4	604251.3	12.315	MW63-200
5632	462969.3	604251.1	13.059	MW63-35
5633	462969.2	604251.2	13.059	MW63-18
5634	462968.9	604252.1	14.178	GROUND AT MW63
5635	462714.4	604134.8	18.069	U3-C1
5636	462713.2	604135.3	14.981	GROUND AT U3-C1
5637	461822.3	604275.2	67.723	MW51
5638	461821.3	604274.9	69.639	GROUND AT MW51
5639	461823.4	604274.9	67.511	MW51-DRAINAGE
5640	461950.3	603899.2	73.164	MW40
5641	461950	603898	74.948	GROUND AT MW40
5642	462164	603420.6	11.901	OUT1
5643	462164.5	603421.9	8.188	CATWALK AT OUT1

FEBRUARY 2007

PNT#	NORTH	EAST	ELEV	REMARKS
4655	463006.8	604879.2	76.518	RW1
4657	463012.5	604885.1	78.057	MW30

MARCH 2007

PNT#	NORTH	EAST	ELEV	REMARKS
4687	463006.8	604879.2	75.822	RW1
4688	463012.5	604885.1	75.66	MW30

MAY 2007

PNT#	NORTH	EAST	ELEV	REMARKS
4802	462969.9	604924.3	76.002	MW31
4803	462969.7	604924.4	75.641	MW31
4804	462969.4	604925.5	77.447	GROUND AT MW31
4805	462953.9	604876	77.126	MW32
4806	462952.7	604875.4	78.898	GROUND AT MW32
4807	463080.2	604445.8	14.171	MW49-26
4808	463078.9	604446.8	14.223	MW49-42
4810	463079	604446.5	14.457	MW49-65
4811	463079.8	604445.1	14.582	GROUND AT MW49-26
4812	463078.4	604446.1	14.628	GROUND AT MW49-42 AND MW49-65
4814	463075.8	604604.5	14.852	MW37-22
4815	463075.6	604604.2	14.962	MW37-40
4816	463075.5	604604.4	14.788	MW37-57
4817	463075.5	604604.5	14.791	MW37-32
4818	463075.3	604604.2	15.021	GROUND AT MW37
4819	463090.8	604657.4	11.598	MW36-26
4820	463090.6	604657.3	11.67	MW36-53
4821	463090.5	604657.4	11.754	MW36-41
4822	463091.2	604657.2	11.799	GROUND AT MW36
4823	463079.5	604642.2	15.054	U2C1
4824	463079.5	604643	12.031	GROUND AT U2C1
4832	462826.6	604631.4	20.073	U1CSS
4833	462827.3	604631.1	15.088	GROUND AT U1CSS
4835	463122.8	604280.5	18.496	HR1
4836	463122.6	604280.8	14.994	GROUND AT HR1
4837	462712.9	604135.4	15.003	GROUND AT U3C1
4838	462714.3	604134.8	18.06	U3C1
4839	462512.5	603824.5	14.315	ASPHALT NEAR MW38
4840	462515.1	603823.2	14.443	GROUND ON NORTH SIDE OF CONCRETE PAD
4843	462512.4	603820.6	14.47	GROUND ON SOUTH SIDE OF CONCRETE PAD
4844	462505.7	603810.5	13.999	MW38
4845	462505.5	603810.7	14.346	MW38RIM
4846	462505.3	603810.9	14.342	GROUND AT MW38
4848	462164.1	603420.5	11.891	OUT1
4849	462164.1	603421.4	8.204	CATWALK AT OUT1
4850	462015.8	603473.8	14.759	MW48-23
4851	462015.6	603473.9	15.069	MW48-38
4852	462016.1	603473.7	15.389	MW48RIM
4853	462016.2	603473.9	15.387	GROUND AT MW48

SEPTEMBER 2007

STATE GRID

PNT#	NORTH	EAST	ELEV	REMARKS
4856	463146.3	604408.8	13.364	MW66-D
4857	463146.3	604408.6	13.407	MW66-S
4858	463145.9	604408.5	14.122	GROUND AT MW66
4861	463127.1	604426.7	12.865	MW67
4862	463126.1	604426.3	14.342	MW67-RIM
4863	463125.5	604428.7	14.356	GROUND AT MW67

PLANT GRID

PNT#	NORTH	EAST	ELEV	REMARKS
4856	6494.518	1103.66	13.364	MW66-D
4857	6494.377	1103.604	13.407	MW66-S
4858	6494.051	1103.746	14.122	GROUND AT MW66
4861	6490.477	1129.653	12.865	MW67
4862	6489.49	1129.928	14.342	MW67-RIM
4863	6490.526	1132.2	14.356	GROUND AT MW67

INDIAN POINT ENERGY CENTER
MASTER ELEVATION LIST

WELL ID	Date of Survey (*date of alteration)	Top of Casing Elevation	Ground Surface Elevation	Distance from Ground Surface to Top of Casing (as surveyed)	Measured Distance from Ground Surface to Top of Casing	NOTE:
MW-30	Jan 2006		51.7 (NS)			
	Nov 2006	78.470	72.690	5.780		
	Jan 31 2007					casing cut
	Feb 2007	78.057	NA			
	Mar 2007 (Feb 15 2007*)	75.660	77.5 (NS)			2.39' casing cut
MW-31	Dec 2005	79.593	79.743 (NS)		-0.15	
	Sept 12 2006*					casing cut for well vault installation
	May 16 2007	75.641	77.447	-1.806		
MW-32	Dec 2005	78.339	78.939	-0.600	-0.6	
	Sept 13 2006*					casing cut for well vault installation
	May 16 2007	77.126	78.898	-1.772		
MW-33	Dec 2005	18.619	18.879		-0.26	ground surface measurements take
MW-34	Dec 2005	18.071	18.481		-0.41	ground surface measurements take
MW-35	Dec 2005	18.444	18.604		-0.16	ground surface measurements take
MW-36-24	Mar 2006	11.393			-0.33	
	May 16 2007 (May 9 2007*)	11.598	11.799	-0.201		pvc coupling attached for pneumati
MW-36-35	Mar 2006	11.604	NS			
	May 16 2007 (Jan 3 2007*)	11.754	11.799	-0.045	-0.19	pvc coupling attached for pneumati
MW-36-52	Mar 2006	11.492	NS			
	May 16 2007 (Jan 3 2007*)	11.670	11.799	-0.129	-0.06	pvc coupling attached for pneumati
MW-37-22	Mar 2006	14.784	NS		-0.18	
	May 16 2007	14.852	15.021	-0.169		
MW-37-32	Mar 2006	14.725	NS			
	May 16 2007 (Jan 3 2007*)	14.791	15.021	-0.230	-0.24	pvc coupling attached for pneumati
MW-37-40	Mar 2006	14.790	NS			
	May 16 2007 (Jan 3 2007*)	14.962	15.021	-0.059	-0.06	pvc coupling attached for pneumati
	(June 12 2007*)	14.852	15.021	-0.169		pvc coupling removed
MW-37-57	Mar 2006	14.723	NS			
	May 16 2007 (Jan 3 2007*)	14.788	15.021	-0.233	-0.25	pvc coupling attached for pneumati
MW-38	Dec 2005	13.990	14.350		-0.36	
	May 16 2007	13.999	14.342	-0.343		

NS - Not Surveyed

INDIAN POINT ENERGY CENTER
MASTER ELEVATION LIST

WELL ID	Date of Survey (*date of alteration)	Top of Casing Elevation	Ground Surface Elevation	Distance from Ground Surface to Top of Casing (as surveyed)	Measured Distance from Ground Surface to Top of Casing	NOTE:
MW-39	Mar 2006	81.452	81.864	-0.412		
	(Sep 19 2006*) Jan 2007	79.992	81.827	-1.835		casing cut for well vault installation
MW-40	Mar 2006	74.758	74.987	-0.229		
	(Nov 8 2006*) Jan 2007	73.164	74.948	-1.784	-1.83	casing cut for well vault installation
MW-41-13	Apr 2006	NS	54.870			
MW-41-40	Apr 2006	54.130	54.870	-0.740		
MW-41-63	Apr 2006	54.130	54.870	-0.740		
MW-42-49	Apr 2006	69.419	69.714	-0.295	-0.22	
MW-42-78	Apr 2006	69.524	69.714		-0.19	
MW-43-28	Mar 2006	48.021	48.761	-0.740		
MW-43-62	Mar 2006	47.821	48.761	-0.940		
MW-44-67	Apr 2006	93.020	93.520	-0.500		
MW-44-102	Apr 2006	92.960	93.520	-0.560		
	May 7 2007*	93.090	93.520		-0.43	pvc coupling attached for pneumati
MW-45-42	Apr 2006	53.196	53.662	-0.466	-0.46	
MW-45-61	Apr 2006	53.097	53.662	-0.565		
	May 7 2007*	53.217	53.662		-0.445	pvc coupling attached for pneumati
MW-46	Apr 2006	16.970	18.080	-1.110	-1.1	
MW-47-56	Apr 2006	69.805	70.321	-0.516	-0.5	
MW-47-80	Apr 2006	69.742	70.321	-0.579	-0.57	
MW-48-23	Mar 2006	14.762	15.394	-0.632	-0.63	
	May 17 2007	14.759	15.387	-0.628		
MW-48-37	Mar 2006	14.765	15.394	-0.629	-0.33	surveyor error
	May 17 2007	15.069	15.387	-0.318		
	May 25 2007*	15.189	15.387		-0.198	pvc coupling attached for pneumati
MW-49-26	Apr 2006	14.191	14.655	-0.464	-0.42	
	May 16 2007	14.171	14.582	-0.411		
MW-49-42	Apr 2006	14.133	14.655	-0.522	-0.54	
	May 16 2007 (May 9 2007*)	14.223	14.628	-0.405		pvc coupling attached for pneumati

NS - Not Surveyed

INDIAN POINT ENERGY CENTER
MASTER ELEVATION LIST

WELL ID	Date of Survey (*date of alteration)	Top of Casing Elevation	Ground Surface Elevation	Distance from Ground Surface to Top of Casing (as surveyed)	Measured Distance from Ground Surface to Top of Casing	NOTE:
MW-49-65	Apr 2006	14.372	14.655	-0.283	-0.26	
	May 16 2007 (May 4, 2007)	14.457	14.628	-0.171	-0.17	pvc coupling attached for pneumati
MW-50-42	Apr 2006	14.432	14.923	-0.491	-0.59	
	May 7 2007*	14.453	14.923		-0.47	pvc coupling attached for pneumati
MW-50-66	Apr 2006	14.614	14.923	-0.309	-0.32	
MW-51	Apr 2006	69.340	69.620	-0.280		
	(Nov 9 2006*) Jan 2007	67.723	69.639	-1.916	-1.83	casing cut for well vault installation
MW-52	Apr 2006	16.370	16.766	-0.396		
	Oct 17 2006*	14.916	16.766		-1.85	casing cut for well vault installation
MW-52-11	Apr 2006	16.283	16.766	-0.483	-1.8	
MW-53-82	Nov 2006	69.930	70.260	-0.330	-0.32	
MW-53-120	Nov 2006	70.060	70.260	-0.200		
	Dec 28 2006*	70.190	70.260		-0.13	pvc coupling attached for pneumati
MW-54	Nov 2006	14.760	14.990	-0.230		
	?	13.090	14.990		-1.9	casing cut
MW-55-24	Nov 2006	17.670	18.250	-0.580		ground surface measurements take
	Dec 27 2006*	17.770	18.250		-0.48	pvc coupling attached for pneumati
MW-55-35	Nov 2006	17.670	18.250	-0.580		ground surface measurements take
	Dec 27 2006*	17.770	18.250		-0.48	pvc coupling attached for pneumati
MW-55-54	Nov 2006	17.680	18.250	-0.570		ground surface measurements take
	Dec 27 2006*	17.770	18.250		-0.48	pvc coupling attached for pneumati
MW-56	Nov 2006	68.560	70.260	-1.700	-1.76	elevation for 4" well casing prior to
MW-56-53	Jan 2007	69.322	70.258	-0.936	-0.97	
MW-56-83	Jan 2007	69.207	70.258	-1.051	-1.09	
MW-57-11	Nov 2006	14.630	14.980	-0.350		
	Dec 26 2006*	14.730	14.980		-0.25	pvc coupling attached for pneumati
MW-57-20	Nov 2006	14.610	14.980	-0.370		
	Dec 26 2006*	14.750	14.980		-0.23	pvc coupling attached for pneumati

NS - Not Surveyed

INDIAN POINT ENERGY CENTER
MASTER ELEVATION LIST

WELL ID	Date of Survey (*date of alteration)	Top of Casing Elevation	Ground Surface Elevation	Distance from Ground Surface to Top of Casing (as surveyed)	Measured Distance from Ground Surface to Top of Casing	NOTE:
MW-57-45	Nov 2006	14.640	14.980	-0.340		
	Dec 26 2006*	14.810	14.980		-0.17	pvc coupling attached for pneumati
MW-58-26	Nov 2006	14.230	14.570	-0.340	-0.35	
MW-58-65	Nov 2006	14.140	14.570	-0.430		
	Jan 2 2007*	14.250	14.570		-0.32	pvc coupling attached for pneumati
MW-59-32	Nov 2006	14.310	14.520	-0.210		
	Dec 26 2006*	14.410	14.520		-0.11	pvc coupling attached for pneumati
MW-59-45	Nov 2006	13.930	14.520	-0.590		
	Dec 26 2006*	13.900	14.520		-0.62	pvc coupling attached for pneumati
MW-59-68	Nov 2006	14.150	14.520	-0.370		
	Dec 26 2006*	14.230	14.520		-0.29	pvc coupling attached for pneumati
MW-60	Nov 2006	12.480	14.310	-1.830	-1.85	
MW-62	Nov 2006	12.820	14.690	-1.870	-1.86	
MW-62-18	Nov 2006	12.810	14.690		-1.88	
MW-62-37	Nov 2006	12.810	14.690		-1.88	
MW-63	Jan 2007	12.315	14.178	-1.863	-1.85	
MW-63-18	Jan 2007	13.059	14.178	-1.119	-1.16	
MW-63-34	Jan 2007	13.059	14.178	-1.119	-1.16	
MW-65	Nov 2006	69.720	70.260	-0.540		elevation for 4" well casing prior to
MW-65-48	Jan 2007	68.856	69.723	-0.867	-0.93	
MW-65-80	(Dec 28 2006*) Jan 2007	68.841	69.723	-0.882		pvc coupling attached for pneumati
MW-66	Jan 2007	12.155	14.021	-1.866		
	Feb 21 2007*		14.021			casing cut for well vault installation
MW-66-21	Sept 26 2007	13.407	14.122	-0.715		
MW-66-36	Sept 26 2007	13.364	14.122	-0.758		
MW-67 waterloo	Sept 26 2007	12.865	14.356	-1.491		top of pvc was surveyed (no manif
MW-67	Sept 26 2007	12.511	14.356	-1.845		top of steel casing elevation derive
T1-U1-1	Nov 2006	69.320	69.670	-0.350		
T1-U1-2	NA	NA	NA			
MW-107	Dec 2005	142.757	140.061	2.696		
MW-108	Dec 2005	14.230	14.480		-0.25	
MW-109	Dec 2005	14.254	14.554		-0.3	

NS - Not Surveyed

INDIAN POINT ENERGY CENTER
MASTER ELEVATION LIST

WELL ID	Date of Survey (*date of alteration)	Top of Casing Elevation	Ground Surface Elevation	Distance from Ground Surface to Top of Casing (as surveyed)	Measured Distance from Ground Surface to Top of Casing	NOTE:
MW-111	Dec 2005	19.385	NS			
	Mar 20 2006					casing cut approx 1 ft
	Nov 2006	18.380	18.930	-0.550	-0.59	casing cut and new manhole install
MW-112	Dec 2005	36.773	NS			
U3-1	Dec 2005	13.495	NA		NA	road box in sinkhole/ ground surfac
U3-2	Dec 2005	14.114	14.164		-0.05	
U3-3	Dec 2005	14.599	14.849		-0.25	
U3-4D	Dec 2005	14.519	14.819		-0.3	
U3-4S	Dec 2005	13.943	14.653		-0.71	
U3-T1	Mar 2006	8.518	3.267	5.251	5.15	
U3-T2	Mar 2006	8.512	3.259	5.253	5.15	
I-2	Nov 2006	82.230	80.920	1.310		
HR-1	Apr 2006	18.517	NS			
	May 16 2007	18.496	14.994	3.502		
OUT-1	Apr 2006	11.910	NS			
	Jan 2007	11.901	8.188	3.713	3.65	
	May 17 2007	11.891	8.204	3.687		
U3-C1	Jan 2007	18.069	14.981	3.088		
	May 17 2007	18.060	15.003	3.057		
U2-C1	Apr 2006	15.054	12.054	3.000	3	
	May 16 2007	15.054	12.031	3.023		
RW-1	Nov 2006	81.280	72.690	8.590		
	(Jan 31 2007*) Feb 2007	76.518	NS		3.78	casing cut 4.3'
	(Feb 15 2007*) Mar 2007	75.822	77.5 (NS)			casing cut 0.69'
U1CSS	May 16 2007	20.073	15.088	4.985	5	
MH-3	Mar 2006	14.847	NA	NA	NA	
MH-4	Mar 2006	16.949	NA	NA	NA	
MH-4A	Mar 2006	12.707	NA	NA	NA	
MH-5	Nov 2006	18.540	NA	NA	NA	
N Curtain Drain	NA	36.000	33.000		3.000	
Sphere Found. Sump	NA	17.020	14.000		3.020	

NS - Not Surveyed

APPENDIX F – SPECIFIC CAPACITY TEST LOGS

GZA GEOENVIRONMENTAL OF NY	PROJECT:	WELL ID	MW-38
440 NINTH AVENUE, 18TH FLOOR	Indian Point Energy Center, Buchanan, NY	SHEET	1 of 1
NEW YORK, NY 10001		FILE NO.	41.0017869.10
ENGINEERS AND SCIENTISTS		CHECKED BY	S. Covelli

COLUMN OF WATER IN WELL:

Depth to Bottom (ft) - Static Water Level (ft)

= 39.02 - 10.67

Water Column (T): 28.35 (ft)

Well Diameter: 4 (inches)

Well Volume: 18.5 (gal)

PUMP DEPTH (ft): 38

STATIC WATER LEVEL (ft): 10.67

ENGINEER: A. Hough

WEATHER: sunny, 80's F

TEST DATE: 5/24/2007

Specific Capacity Test

Time	Elapsed Time (min)	Depth to Water (ft)	Drawdown (ft) (s)	Transducer Reading (ft)	Pumping Rate (gpm) (Q)	Specific Capacity (gpm/ft) (Q/s)	Notes
8:45	--	10.67	--	27.874	--	--	
8:47	0	--	--	--	--	--	pump on
8:51	4	10.76	0.09	27.819	1.94	21.5	
8:54	7	10.78	0.11	27.790	2.22	20.2	
8:58	11	10.81	0.14	27.756	2.22	15.9	
9:01	14	10.83	0.16	27.731	2.22	13.9	
9:05	18	10.86	0.19	27.702	2.40	12.6	
9:11	22	10.90	0.23	27.655	2.40	10.4	
9:15	26	10.94	0.27	27.616	2.40	8.9	
9:20	31	11.00	0.33	27.549	2.40	7.3	
9:25	36	11.07	0.40	27.498	2.40	6.0	
9:29	40	11.10	0.43	27.467	2.50	5.8	
9:34	45	11.14	0.47	27.414	2.50	5.3	
9:39	49	11.17	0.50	27.377	2.50	5.0	
9:44	54	11.23	0.56	27.328	2.50	4.5	
9:45	55	--	--	--	--	--	pump off

NOTES AND OBSERVATIONS:

Pumping rate could not be increased above 2.5 gpm due to limited power supply.

GZA GEOENVIRONMENTAL OF NY	PROJECT:	WELL ID	MW 42-49
440 NINTH AVENUE, 18TH FLOOR	Indian Point Energy Center, Buchanan, NY	SHEET	1 of 1
NEW YORK, NY 10001		FILE NO.	41.0017869.1
ENGINEERS AND SCIENTISTS		CHECKED BY	S. Covelli

COLUMN OF WATER IN WELL:

Depth to Bottom (ft) - Static Water Level (ft)

= 49.18 - 34.81

Water Column (T): 14.37 (ft)

Well Diameter: 2 (inches)

Well Volume: 2.3 (gal)

PUMP DEPTH (ft): 48

STATIC WATER LEVEL (ft): 34.81

ENGINEER: A. Gallas

WEATHER: Sunny Mid 80's

TEST DATE: 5/30/2006

Specific Capacity Test

Time	Elapsed Time	Depth to Water (ft)	GW Elevation (ft msl)	Drawdown (ft) (s)	Pumping Rate (gpm) (Q)	Specific Capacity (gpm/ft) (Q/s)	Notes
Sustained Yield Test							
7:52	0	34.81	34.868	0.00	--	--	
7:53	1	36.01	33.672	1.20	--	--	
7:56	4	36.10	33.578	1.29	--	--	
8:00	8	36.22	33.462	1.41	0.417	0.296	137.5 Hz
8:01	9	36.22	33.460	1.41	--	--	
8:02	10	36.23	33.446	1.42	--	--	136.3 Hz
8:08	16	35.95	33.730	1.14	0.230	0.202	136.3 Hz
8:10	18	35.95	33.733	1.14	0.230	0.203	136.3 Hz
8:11	19	35.95	33.733	1.14	0.230	0.203	136.3 Hz
8:13	21	35.93	33.749	1.12	0.230	0.205	136.3 Hz
8:19	27	35.93	33.744	1.12	0.280	0.249	136.3 Hz
8:20	28	35.97	33.710	--	--	--	
8:25	33	35.95	33.724	1.14	--	--	
8:30	38	35.90	33.774	--	--	--	
8:42	50	35.87	33.810	14.37	0.254	0.018	170.0 Hz
8:44	52	37.31	32.370	--	--	--	
8:45	53	38.41	31.266	3.60	4.286	1.190	170.8 Hz
8:46	54	43.26	26.418	8.45	--	--	Dry
Rising Head Test							
8:49	0	41.76	27.921	6.95	--	--	
8:51	2	39.40	30.282	4.59	--	--	
9:05	16	35.19	34.485	0.38	--	--	
9:10	21	35.11	34.573	0.29	--	--	

NOTES AND OBSERVATIONS:

Pressure transducer was referenced to elevation 34.34' msl.

At 8:45, water flow ceased.

At 8:47, pump was turned off to allow recovery. Water levels were recorded as a rising head test.

GZA GEOENVIRONMENTAL OF NY	PROJECT:	WELL ID	MW 43-62
440 NINTH AVENUE, 18TH FLOOR	Indian Point Energy Center, Buchanan, NY	SHEET	1 of 2
NEW YORK, NY 10001		FILE NO.	41.0017869.1
ENGINEERS AND SCIENTISTS		CHECKED BY	S. Covelli

COLUMN OF WATER IN WELL:

Depth to Bottom (ft) - Static Water Level (ft)
= 61.92 - 15.52
Water Column (T): 46.4 (ft)
Well Diameter: 2 (inches)
Well Volume: 7.6 (gal)

PUMP DEPTH (ft): 55'
STATIC WATER LEVEL (ft): 15.52
ENGINEER: A. Gallas
WEATHER: Sunny
TEST DATE: 5/22/2006

Specific Capacity Test

Time	Elapsed Time	Depth to Water (ft)	GW Elevation (ft msl)	Drawdown (ft) (s)	Pumping Rate (gpm) (Q)	Specific Capacity (gpm/ft) (Q/s)	Notes
Sustained Yield Test							
11:42	--	16.14	31.677	0.00	--	--	
11:54	0	--	--	0.00	--	--	Pump ON
11:57	15	16.56	31.257	0.42	--	--	111.6 Hz
12:01	19	20.12	27.701	3.98	--	--	111.6 Hz
12:02	20	20.18	27.644	4.03	--	--	111.6 Hz
12:03	21	20.20	27.621	4.06	--	--	111.6 Hz
12:04	22	20.21	27.607	4.07	0.1	0.026	111.6 Hz
12:08	26	20.25	27.573	4.10	--	--	111.6 Hz
12:09	27	20.22	27.605	4.07	--	--	111.6 Hz
12:10	28	20.73	27.088	4.59	--	--	111.6 Hz
12:13	31	21.24	26.578	5.10	--	--	116.1 Hz
12:18	36	20.47	27.352	4.33	0.1	0.025	112.6 Hz
12:20	38	--	--	--	--	--	112.6 Hz
12:26	44	20.66	27.159	4.52	--	--	113.1 Hz
12:27	45	20.79	27.030	4.65	--	--	113.1 Hz
12:32	50	20.96	26.861	4.82	--	--	112.3 Hz
12:39	57	20.89	26.931	4.75	--	--	
12:42	60	20.21	27.607	4.07	--	--	increased flow rate
12:44	62	31.17	16.650	15.03	--	--	216 Hz
12:45	63	35.00	12.824	18.85	1.5	0.080	216 Hz
12:46	64	42.12	5.697	25.98	--	--	216 Hz
12:47	65	46.77	1.048	30.63	--	--	
12:48	66	47.19	0.630	31.05	1.0	0.032	
Rising Head Test							
12:54	0	49.72	-1.894	33.57	--	--	Pump OFF
12:59	5	42.94	4.880	26.80	--	--	
13:00	10	40.03	7.795	23.88	--	--	
14:01	66	17.10	30.718	0.96	--	--	

NOTES AND OBSERVATIONS:

Transducer depth approximately 50 feet below ground surface.
Top of casing elevation: 47.821 ft
Sustained yield test started at 11:50.
At 12:42, pumping rate was increased in order to lower water level for rising head test.

GZA GEOENVIRONMENTAL OF NY	PROJECT:	WELL ID	MW 44-67
440 NINTH AVENUE, 18TH FLOOR	Indian Point Energy Center,	SHEET	1 of 1
NEW YORK, NY 10001	Buchanan, NY	FILE NO.	41.0017869.1
ENGINEERS AND SCIENTISTS		CHECKED BY	S. Covelli

COLUMN OF WATER IN WELL:

Depth to Bottom (ft) - Static Water Level (ft)

= 67.41 - 58.41

Water Column (T): 9.0 (ft)

Well Diameter: 2 (inches)

Well Volume: 1.5 (gal)

PUMP DEPTH (ft): 67

STATIC WATER LEVEL (ft): 58.41

ENGINEER: A. Gallas

WEATHER: Overcast

TEST DATE: 6/2/2006

Specific Capacity Test

Time	Elapsed Time	Depth to Water (ft)	GW Elevation (ft msl)	Drawdown (ft) (s)	Pumping Rate (gpm) (Q)	Specific Capacity (gpm/ft) (Q/s)	Notes
Sustained Yield Test							
9:35	0	58.41	34.617	0.00	--	--	
9:45	10	60.11	32.921	1.70	--	--	178.0 Hz
9:46	11	60.19	32.835	1.78	--	--	178.0 Hz
9:47	12	60.33	32.700	1.92	--	--	178.0 Hz
9:48	13	60.39	32.639	1.98	--	--	178.0 Hz
9:49	14	60.44	32.589	2.03	0.1	0.065	(1)
9:50	15	60.61	32.418	2.20	--	--	(2)
9:52	17	60.70	32.331	2.29	--	--	178.0 Hz
9:53	18	60.73	32.296	2.32	0.1	0.035	(1)
9:55	20	60.12	32.905	1.71	--	--	
9:58	23	--	--	--	--	--	(3)
9:59	24	61.66	31.370	3.25	1.2	0.375	(4)
Rising Head Test							
10:00	0	61.66	31.370	3.25	--	--	
10:06	6	61.95	--	3.54	--	--	(5)
10:11	11	61.91	--	3.50	--	--	
10:17	17	61.66	31.372	3.24	--	--	
10:31	31	61.50	31.528	3.09	--	--	
10:45	45	61.20	31.832	2.78	--	--	
11:00	60	60.93	32.099	2.52	--	--	
11:15	75	60.66	32.371	2.25	--	--	

NOTES AND OBSERVATIONS:

(1) Water flow ceased.

(2) Pumping resumed.

(3) Pumping resumed. Rate increased to 1.2 gpm to draw down water level for rising head test.

(4) Water flow ceased. Pump OFF to allow recovery.

(5) At 10:08, depth to water in MW 44-104 was 68.4'.

GZA GEOENVIRONMENTAL OF NY	PROJECT:	WELL ID	MW 45-43
440 NINTH AVENUE, 18TH FLOOR	Indian Point Energy Center,	SHEET	1 of 2
NEW YORK, NY 10001	Buchanan, NY	FILE NO.	41.0017869.1
ENGINEERS AND SCIENTISTS		CHECKED BY	S. Covelli

COLUMN OF WATER IN WELL:

Depth to Bottom (ft) - Static Water Level (ft)

= 43.6 - 23.76

Water Column (T): 19.84 (ft)

Well Diameter: 2 (inches)

Well Volume: 3.2 (gal)

PUMP DEPTH (ft): 42

STATIC WATER LEVEL (ft): 23.76

ENGINEER: A. Gallas/ D. Bastos

WEATHER: Sunny

TEST DATE: 5/24/2006

Specific Capacity Test

Time	Elapsed Time	Depth to Water (ft)	Transducer Reading (ft water)	Drawdown (ft) (s)	Pumping Rate (gpm) (Q)	Specific Capacity (gpm/ft) (Q/s)	Notes
Sustained Yield Test							
8:48	0	23.33	29.449	0.00	--	--	
8:55	7	--	--	--	--	--	117.2 Hz
8:58	10	--	27.003	2.45	--	--	
8:59	11	--	25.891	3.56	--	--	
9:02	14	--	26.435	3.01	--	--	118.7 Hz
9:06	18	--	26.176	3.27	--	--	
9:08	20	--	25.810	3.64	--	--	
9:09	21	--	25.710	3.74	--	--	
9:10	22	--	25.634	3.82	0.1	0.028	
9:11	23	--	25.574	3.88	--	--	
9:12	24	--	25.559	3.89	--	--	
9:14	26	--	25.528	3.92	--	--	
9:15	27	--	25.499	3.95	--	--	
9:22	34	--	25.433	4.02	--	--	
9:29	41	--	25.754	3.70	--	--	
9:30	42	--	24.445	5.00	--	--	
9:34	46	--	23.475	5.97	--	--	
9:35	47	--	23.446	6.00	--	--	
9:37	49	29.54	23.391	6.06	--	--	
9:40	52	29.53	23.437	6.01	0.03	0.005	
9:44	56	--	23.421	6.03	--	--	
9:46	58	--	23.255	6.19	--	--	
9:47	59	--	23.215	6.23	--	--	
9:48	60	29.80	23.222	6.23	--	--	
9:51	63	--	23.077	6.37	0.05	0.007	

NOTES AND OBSERVATIONS:

GZA GEOENVIRONMENTAL OF NY	PROJECT:	WELL ID	MW 45-43
440 NINTH AVENUE, 18TH FLOOR	Indian Point Energy Center,	SHEET	2 of 2
NEW YORK, NY 10001	Buchanan, NY	FILE NO.	41.0017869.1
ENGINEERS AND SCIENTISTS		CHECKED BY	S. Covelli

COLUMN OF WATER IN WELL:

Depth to Bottom (ft) - Static Water Level (ft)

= 43.6 - 23.76

Water Column (T): 19.84 (ft)

Well Diameter: 2 (inches)

Well Volume: 3.2 (gal)

PUMP DEPTH (ft): 42

STATIC WATER LEVEL (ft): 23.76

ENGINEER: A. Gallas/ D. Bastos

WEATHER: Sunny

TEST DATE: 5/24/2006

Specific Capacity Test

Time	Elapsed Time	Depth to Water (ft)	Transducer Reading (ft water)	Drawdown (ft) (s)	Pumping Rate (gpm) (Q)	Specific Capacity (gpm/ft) (Q/s)	Notes
Sustained Yield Test							
9:51	0	29.70	23.077	6.37	--	--	125.5 Hz
9:53	2	29.81	22.985	6.48	--	--	
9:54	3	29.83	22.967	6.50	--	--	
9:56	5	29.85	22.950	6.52	--	--	
9:57	6	29.84	22.959	6.51	--	--	
9:58	7	29.85	22.943	6.52	--	--	
10:00	9	29.85	22.950	6.52	--	--	
10:03	12	29.81	22.984	6.48	--	--	
10:06	15	29.91	22.884	6.58	0.01	0.002	
10:09	18	29.98	22.821	6.65	--	--	
10:12	21	30.03	22.772	6.70	--	--	
10:13	22	30.03	22.766	6.70	0.03	0.004	
10:14	23	--	--	--	--	--	(1)
10:15	24	32.48	20.316	9.15	--	--	
10:16	25	34.99	17.806	11.66	--	--	
10:17	26	36.96	15.836	13.63	--	--	
10:18	27	38.07	14.731	14.74	--	--	
10:19	28	39.63	13.169	16.30	3.0	0.184	
10:20	29	40.32	--	--	0.3		(2)
Rising Head Test							
10:22	29	38.75	14.051	15.42	--	--	
10:25	3	38.66	14.142	15.33	--	--	
10:26	4	38.64	14.153	15.31	--	--	
11:12	50	37.84	14.955	14.51	--	--	

NOTES AND OBSERVATIONS:

(1) Increased pumping rate to draw down water level for rising head test.

(2) Pump OFF to allow for recovery.

GZA GEOENVIRONMENTAL OF NY	PROJECT:	WELL ID	MW-48-23
440 NINTH AVENUE, 18TH FLOOR	Indian Point Energy Center, Buchanan, NY	SHEET	1 of 1
NEW YORK, NY 10001		FILE NO.	41.0017869.10
ENGINEERS AND SCIENTISTS		CHECKED BY	S. Covelli

COLUMN OF WATER IN WELL:

Depth to Bottom (ft) - Static Water Level (ft)

= 22.69 - 15.21

Water Column (T): 7.48 (ft)

Well Diameter: 2 (inches)

Well Volume: 1.2 (gal)

PUMP DEPTH (ft): 22

STATIC WATER LEVEL (ft): 10.67

ENGINEER: A. Hough

WEATHER: sun, 80's F

TEST DATE: 5/24/2007

Specific Capacity Test

Time	Elapsed Time (min)	Depth to Water (ft)	Drawdown (ft) (s)	Transducer Reading (ft water)	Pumping Rate (gpm) (Q)	Specific Capacity (gpm/ft) (Q/s)	Notes
13:23	--	15.21	--	5.700	--	--	
13:28	0	--	--	--	--	--	pump on
13:30	2	16.05	0.84	4.507	1.76	2.1	
13:35	7	16.83	1.62	2.275	2.07	1.3	
13:39	11	17.89	2.68	2.720	2.22	0.8	
13:44	16	17.83	2.62	2.558	2.22	0.8	
13:50	22	17.18	1.97	2.170	2.22	1.1	
13:57	29	17.44	2.23	--	2.14	1.0	
14:04	36	17.20	1.99	2.678	2.14	1.1	
14:08	40	--	3.11	2.590	2.22	0.7	
14:12	44	--	3.00	2.702	2.22	0.7	
14:16	48	--	2.89	2.813	2.22	0.8	
14:19	51	--	2.84	2.860	2.22	0.8	
14:20	52	--	--	--	--	--	pump off

NOTES AND OBSERVATIONS:

Pumping rate could not be increased above 2.25 gpm due to limited power supply.

GZA GEOENVIRONMENTAL OF NY	PROJECT:	WELL ID	MW-50-67
440 NINTH AVENUE, 18TH FLOOR	Indian Point Energy Center, Buchanan, NY	SHEET	1 of 1
NEW YORK, NY 10001		FILE NO.	41.0017869.1
ENGINEERS AND SCIENTISTS		CHECKED BY	S. Covelli

COLUMN OF WATER IN WELL:

Depth to Bottom (ft) - Static Water Level (ft)

= 66.75 - 11.42

Water Column (T): 55.33 (ft)

Well Diameter: 1 (inches)

Well Volume: 2.2 (gal)

PUMP DEPTH (ft): 25

STATIC WATER LEVEL (ft): 11.42

ENGINEER: T. Bohlen

WEATHER: sunny, low 30s

TEST DATE: 3/17/2006

Specific Capacity Test

Time	Elapsed Time	Depth to Water (ft)	Drawdown (ft) (s)	Pumping Rate (gpm) (Q)	Specific Capacity (gpm/ft) (Q/s)	Notes
1020	0	15.88	4.46	0.03	0.01	
1025	5	15.88	4.46	0.03	0.01	
1030	10	15.88	4.46	0.03	0.01	
1035	15	15.88	4.46	0.03	0.01	
1040	20	15.88	4.46	0.03	0.01	
1045	25	15.88	4.46	0.03	0.01	
1050	30	15.88	4.46	0.03	0.01	

NOTES AND OBSERVATIONS:

Purge water appears clear.

GZA GEOENVIRONMENTAL OF NY	PROJECT:	WELL ID	MW-51
440 NINTH AVENUE, 18TH FLOOR	Indian Point Energy Center, Buchanan, NY	SHEET	1 of 1
NEW YORK, NY 10001		FILE NO.	41.0017869.1
ENGINEERS AND SCIENTISTS		CHECKED BY	S. Covelli

COLUMN OF WATER IN WELL:

Depth to Bottom (ft) - Static Water Level (ft)

= 195.9 - 27.6

Water Column (T):	168.3 (ft)	**STATIC WATER LEVEL (ft):**	27.6
Well Diameter:	4 (inches)	**ENGINEER:**	B. Dagostino
Well Volume:	109.9 (gal)	**WEATHER:**	
		TEST DATE:	3/31 - 4/3/2006

Specific Capacity Test

Time	Elapsed Time	Depth to Water (ft)	Drawdown (ft) (s)	Pumping Rate (gpm) (Q)	Specific Capacity (gpm/ft) (Q/s)	Pumping Depth (ft below ground surface)
11:00	0	27.60	0.00	1	--	190
11:10	10	35.10	7.50	1	0.13	190
11:20	20	36.68	9.08	1	0.11	190
11:30	30	37.47	9.87	1	0.10	190
11:40	40	38.65	11.05	1	0.09	--
11:50	50	40.12	12.52	1	0.08	170
12:00	60	42.01	14.41	1	0.07	--
12:10	70	43.61	16.01	1	0.06	100
12:45	105	41.28	13.68	1	0.07	--

NOTES AND OBSERVATIONS:

GZA GEOENVIRONMENTAL OF NY	PROJECT:	WELL ID	MW-52-200
440 NINTH AVENUE, 18TH FLOOR	Indian Point Energy Center, Buchanan, NY	SHEET	1 of 1
NEW YORK, NY 10001		FILE NO.	41.0017869.1
ENGINEERS AND SCIENTISTS		CHECKED BY	S. Covelli

COLUMN OF WATER IN WELL:

Depth to Bottom (ft) - Static Water Level (ft)

= 200 - 10.6

Water Column (T): 189.4 (ft)

Well Diameter: 4 (inches)

Well Volume: 123.7 (gal)

PUMP DEPTH (ft): ~30'

STATIC WATER LEVEL (ft): 10.6

ENGINEER: D. Kirkiland

WEATHER: Sunny 50's

TEST DATE: 3/28/2006

Specific Capacity Test

Time	Elapsed Time	Depth to Water (ft)	Drawdown (ft) (s)	Pumping Rate (gpm) (Q)	Specific Capacity (gpm/ft) (Q/s)	Notes
9:40	0	10.43	0.00	0.04	--	
9:50	10	11.10	0.67	0.04	0.06	
9:55	15	11.90	1.47	0.04	0.03	
10:00	20	12.64	2.21	0.04	0.02	
10:04	24	13.05	2.62	0.04	0.02	
10:10	30	13.23	2.80	0.04	0.01	
10:15	35	13.34	2.91	0.04	0.01	
10:20	40	13.24	2.81	0.04	0.01	
10:25	45	13.20	2.77	0.04	0.01	
10:30	50	13.20	2.77	0.04	0.01	
10:35	55	13.22	2.79	0.04	0.01	
10:40	60	13.26	2.83	0.04	0.01	

NOTES AND OBSERVATIONS:

GZA GEOENVIRONMENTAL OF NY	PROJECT:	WELL ID	MW-53-80
440 NINTH AVENUE, 18TH FLOOR	Indian Point Energy Center, Buchanan, NY	SHEET	1 of 1
NEW YORK, NY 10001		FILE NO.	41.0017869.10
ENGINEERS AND SCIENTISTS		CHECKED BY	S. Covelli

COLUMN OF WATER IN WELL:

Depth to Bottom (ft) - Static Water Level (ft)

= 80 - 60.90

Water Column (T): 19.1 (ft)

Well Diameter: 2 (inches)

Well Volume: 3.1 (gal)

PUMP DEPTH (ft): 78

STATIC WATER LEVEL (ft): 60.90

ENGINEER: A. Hough

WEATHER: sun, 40's F

TEST DATE: 12/19/2006

Specific Capacity Test

Time	Elapsed Time	Depth to Water (ft)	Drawdown (ft) (s)	Pumping Rate (gpm) (Q)	Specific Capacity (gpm/ft) (Q/s)	Notes
1032	0	62.89	1.99	0.50	--	
1035	3	63.58	2.68	0.50	0.19	
1038	6	64.22	3.32	0.50	0.15	
1041	9	64.12	3.22	0.50	0.16	
1044	12	64.28	3.38	0.50	0.15	
1047	15	64.33	3.43	0.50	0.15	
1050	18	64.41	3.51	0.50	0.14	
1053	21	64.98	4.08	0.70	0.17	
1056	24	65.57	4.67	0.60	0.13	
1059	27	65.68	4.78	0.60	0.13	
1102	30	65.58	4.68	0.60	0.13	
1105	33	65.59	4.69	0.60	0.13	
1108	36	65.60	4.70	0.60	0.13	
1111	39	65.58	4.68	0.60	0.13	

NOTES AND OBSERVATIONS:

GZA GEOENVIRONMENTAL OF NY	PROJECT:	WELL ID	MW-58-25
440 NINTH AVENUE, 18TH FLOOR	Indian Point Energy Center, Buchanan, NY	SHEET	1 of 1
NEW YORK, NY 10001		FILE NO.	41.0017869.10
ENGINEERS AND SCIENTISTS		CHECKED BY	S. Covelli

COLUMN OF WATER IN WELL:

Depth to Bottom (ft) - Static Water Level (ft)

= 25 - 14.90

Water Column (T): 10.10 (ft)

Well Diameter: 2 (inches)

Well Volume: 2.7 (gal)

PUMP DEPTH (ft): 23

STATIC WATER LEVEL (ft): 14.90

ENGINEER: A. Hough

WEATHER: sun, 40's F

TEST DATE: 12/19/2006

Specific Capacity Test

Time	Elapsed Time	Depth to Water (ft)	Drawdown (ft) (s)	Pumping Rate (gpm) (Q)	Specific Capacity (gpm/ft) (Q/s)	Notes
1327	0	14.90	0.00	0.50	--	
1329	2	15.83	0.93	0.50	0.54	
1332	5	14.92	0.02	0.40	20.00	
1334	7	15.87	0.97	0.40	0.41	
1336	9	16.10	1.20	0.40	0.33	
1339	12	15.89	0.99	0.30	0.30	
1342	15	15.72	0.82	0.20	0.24	
1344	17	15.04	0.14	0.25	1.79	
1347	20	14.97	0.07	0.30	4.29	
1350	23	15.11	0.21	0.30	1.43	
1352	25	14.94	0.04	0.30	7.50	
1355	28	14.91	0.01	0.35	35.00	
1357	30	15.03	0.13	0.35	2.69	
1359	32	15.25	0.35	0.35	1.00	
1401	34	14.99	0.09	0.25	2.78	

NOTES AND OBSERVATIONS:

GZA GEOENVIRONMENTAL OF NY	PROJECT:	WELL ID	MW-65-48
440 NINTH AVENUE, 18TH FLOOR	Indian Point Energy Center, Buchanan, NY	SHEET	1 of 1
NEW YORK, NY 10001		FILE NO.	41.0017869.10
ENGINEERS AND SCIENTISTS		CHECKED BY	S. Covelli

COLUMN OF WATER IN WELL:

Depth to Bottom (ft) - Static Water Level (ft)
= 48 - 38.11

Water Column (T): 9.89 (ft)
Well Diameter: 2 (inches)
Well Volume: 1.6 (gal)

PUMP DEPTH (ft): 46
STATIC WATER LEVEL (ft): 38.11
ENGINEER: A. Hough
WEATHER: cloudy, 40's F
TEST DATE: 12/18/2006

Specific Capacity Test

Time	Elapsed Time	Depth to Water (ft)	Drawdown (ft) (s)	Pumping Rate (gpm) (Q)	Specific Capacity (gpm/ft) (Q/s)	Notes
1100	0	40.10	1.99	0.60	--	
1102	2	40.49	2.38	0.60	0.25	
1104	4	40.52	2.41	0.60	0.25	
1106	6	39.52	1.41	0.55	0.39	
1110	10	41.10	2.99	0.35	0.12	
1112	12	42.49	4.38	0.35	0.08	
1114	14	42.61	4.50	0.20	0.04	
1116	16	42.78	4.67	0.15	0.03	
1119	19	42.18	4.07	0.15	0.04	
1121	21	42.48	4.37	0.25	0.06	
1123	23	44.02	5.91	0.25	0.04	
1125	25	43.07	4.96	0.10	0.02	
1128	28	42.26	4.15	0.10	0.02	
1130	30	41.40	3.29	0.10	0.03	
1136	36	41.08	2.97	0.10	0.03	
1138	38	40.98	2.87	0.10	0.03	
1140	40	41.00	2.89	0.10	0.03	
1143	43	40.97	2.86	0.10	0.03	
1145	45	41.03	2.92	0.10	0.03	
1148	48	43.71	5.60	0.90	0.16	
1150	50	46.27	8.16	0.90	0.11	

NOTES AND OBSERVATIONS:

GZA GEOENVIRONMENTAL OF NY	PROJECT:	WELL ID	MW-109
440 NINTH AVENUE, 18TH FLOOR	Indian Point Energy Center, Buchanan, NY	SHEET	1 of 1
NEW YORK, NY 10001		FILE NO.	41.0017869.1
ENGINEERS AND SCIENTISTS		CHECKED BY	S. Covelli

COLUMN OF WATER IN WELL:

Depth to Bottom (ft) - Static Water Level (ft)

= 11.8 - 7.3

Water Column (T): 4.5 (ft)

Well Diameter: 2 (inches)

Well Volume: 0.734 (gal)

PUMP DEPTH (ft): 11.0

STATIC WATER LEVEL (ft): 7.3

ENGINEER: S. Covelli

WEATHER: 70's overcast

TEST DATE: 5/10/2007

Specific Capacity Test

Time	Elapsed Time (min)	Depth to Water (ft)	Drawdown (ft) (s)	Pumping Rate (gpm) (Q)	Specific Capacity (gpm/ft) (Q/s)	Notes
10:30	0	7.30		0.0	--	static depth to water
10:32	0	7.30	0.00	5.3	--	pump on
10:34	2	7.42	0.12	5.3	44.2	
10:39	7	7.45	0.15	5.4	36.0	
10:52	20	7.57	0.27	5.4	20.0	
11:02	30	7.62	0.32	5.4	16.9	
11:18	46	7.72	0.42	5.4	12.9	
11:28	56	7.74	0.44	5.4	12.3	
11:29	57	--	--	--	--	pump off
11:49	77	7.61	--	0.0	--	recovery

NOTES AND OBSERVATIONS:

Water was pumped using Grundfos ReadiFlo II submersible pump with maximum pumping capability of approximately 5.5 gpm. No more than 0.44' drawdown could be achieved.

Water is cloudy and grayish brown throughout test.

Drawdown depicted may actually be normal response to tidal influence.

GZA GEOENVIRONMENTAL OF NY	PROJECT:	WELL ID	U3-3
440 NINTH AVENUE, 18TH FLOOR	Indian Point Energy Center, Buchanan, NY	SHEET	1 of 1
NEW YORK, NY 10001		FILE NO.	41.0017869.1
ENGINEERS AND SCIENTISTS		CHECKED BY	S. Covelli

COLUMN OF WATER IN WELL:

Depth to Bottom (ft) - Static Water Level (ft)

= 15 - 8.55

Water Column (T): 6.45 (ft)

Well Diameter: 6 (inches)

Well Volume: 9.5 (gal)

PUMP DEPTH (ft): 14

STATIC WATER LEVEL (ft): 8.55

ENGINEER: S. Covelli

WEATHER: 70's light rain

TEST DATE: 5/11/2007

Specific Capacity Test

Time	Elapsed Time (min)	Depth to Water (ft)	Drawdown (ft) (s)	Pumping Rate (gpm) (Q)	Specific Capacity (gpm/ft) (Q/s)	Notes
13:54	0	8.55	--	0.00	--	static depth to water
13:58	0	8.55	0.00	1.30	--	pump on
14:00	2	9.32	0.77	1.30	1.7	
14:03	5	10.31	1.76	1.20	0.7	
14:07	9	11.12	2.57	1.20	0.5	
14:09	11	11.69	3.14	1.20	0.4	
14:12	14	11.53	2.98	0.50	0.2	lowered pumping rate
14:14	16	11.50	2.95	0.50	0.2	increased pumping rate
14:17	19	11.54	2.99	0.70	0.2	
14:25	27	11.69	3.14	0.70	0.2	
14:31	33	11.78	3.23	0.70	0.2	
14:36	38	11.81	3.26	0.65	0.2	
14:37	39	--	--	0.65	--	raining hard
15:05	67	--	--	0.65	--	rain stops
15:12	74	12.00	3.45	0.65	0.2	
15:16	78	12.04	3.49	0.65	0.2	
15:20	82	12.05	3.50	0.65	0.2	
15:22	84	12.04	3.49	0.60	0.2	
15:29	91	11.90	3.35	0.60	0.2	
15:33	95	11.87	3.32	0.60	0.2	
15:51	113	11.87	3.32	0.60	0.2	
15:55	117	11.91	3.36	0.60	0.2	
15:59	121	11.93	3.38	0.60	0.2	
16:03	125	11.96	3.41	0.60	0.2	
16:04	126	--	--	0.00	--	pump off

NOTES AND OBSERVATIONS:

GZA GEOENVIRONMENTAL OF NY	PROJECT:	WELL ID	U3-4S
440 NINTH AVENUE, 18TH FLOOR	Indian Point Energy Center, Buchanan, NY	SHEET	1 of 1
NEW YORK, NY 10001		FILE NO.	41.0017869.1
ENGINEERS AND SCIENTISTS		CHECKED BY	S. Covelli

COLUMN OF WATER IN WELL:

Depth to Bottom (ft) - Static Water Level (ft)

= 14 - 9.38

Water Column (T): 4.62 (ft)

Well Diameter: 4 (inches)

Well Volume: 3.0 (gal)

PUMP DEPTH (ft): 13

STATIC WATER LEVEL (ft): 9.38

ENGINEER: S. Covelli

WEATHER: low 70's

TEST DATE: 5/14/2007

Specific Capacity Test

Time	Elapsed Time (min)	Depth to Water (ft)	Drawdown (ft) (s)	Pumping Rate (gpm) (Q)	Specific Capacity (gpm/ft) (Q/s)	Notes
10:10	0	9.36	--	--	--	static depth to water
10:11	0	--	--	4.9	--	pump on
10:17	6	10.94	1.58	4.9	3.1	
10:20	9	10.90	1.54	4.9	3.2	
10:23	12	10.89	1.53	5.0	3.3	
10:28	17	--	--	--	--	generator stops- off
10:39	28	--	--	--	--	pump on
10:40	29	10.83	1.47	5.0	3.4	
10:43	32	10.91	1.55	5.0	3.2	
10:52	41	11.00	1.64	5.0	3.0	
11:01	50	11.05	1.69	5.0	3.0	
11:02	51	--	--	--	--	pump off

NOTES AND OBSERVATIONS:

GZA GEOENVIRONMENTAL OF NY	PROJECT:	WELL ID	U3-4D
440 NINTH AVENUE, 18TH FLOOR	Indian Point Energy Center, Buchanan, NY	SHEET	1 of 1
NEW YORK, NY 10001		FILE NO.	41.0017869.1
ENGINEERS AND SCIENTISTS		CHECKED BY	S. Covelli

COLUMN OF WATER IN WELL:

Depth to Bottom (ft) - Static Water Level (ft)

= 27.1 - 10.61

Water Column (T): 16.49 (ft)

Well Diameter: 4 (inches)

Well Volume: 10.8 (gal)

PUMP DEPTH (ft): 15

STATIC WATER LEVEL (ft) 10.61

ENGINEER: A. Gallas

WEATHER: Sunny

TEST DATE: 5/1/2006

Specific Capacity Test

Time	Elapsed Time (min)	Depth to Water (ft)	Drawdown (ft) (s)	Pumping Rate (gpm) (Q)	Specific Capacity (gpm/ft) (Q/s)	Notes
Sustained Yield Test						
9:20	0	10.61	0.00			
9:22	2	13.43	2.82			
9:25	5	14.23	3.62	0.225	0.1	
9:31	11	16.19	5.58			
9:36	16	16.56	5.95			
9:37	17	16.91	6.30			(1)
9:44	24	17.01	6.40			
9:49	29	17.11	6.50			(2)
Rising Head Test						
9:50	0	17.11	6.50			Pump OFF
10:00	10	17.01	6.40			
10:15	25	16.72	6.11			
10:23	33	16.64	6.03			
10:28	38	16.57	5.96			
10:32	42	16.48	5.87			
10:40	50	16.46	5.85			
10:50	60	16.31	5.70			
11:15	85	16.04	5.43			
11:50	120	15.69	5.08			
13:07	197	14.86	4.25			
13:22	212	14.78	4.17			
13:30	220	14.72	4.11			
13:45	235	14.59	3.98			

NOTES AND OBSERVATIONS:

(1) Pumping rate lowered to minimum capability.

(2) Extracted approximately 3.5 gallons of water.

APPENDIX G – HYDRAULIC CONDUCTIVITY CALCULATIONS

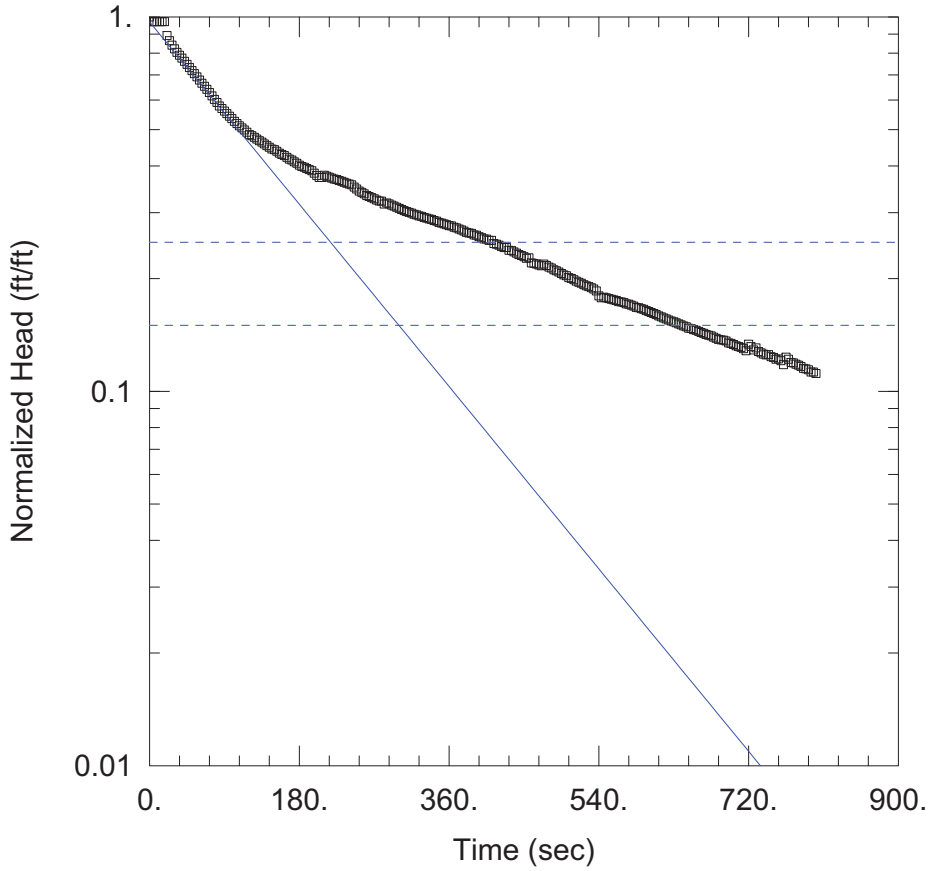

MW-30 TEST 4

Data Set: J:\...\MW-30 test 4.aqt
Date: 09/10/07 Time: 16:39:28

PROJECT INFORMATION

Company: GZA GeoEnvironmental
Client: Indian Point Energy Center
Project: 41.0017869.10
Location: Buchana, New York
Test Well: MW-30 (41.5-46.3)
Test Date: 11/22/05

AQUIFER DATA

Saturated Thickness: 300. ft Anisotropy Ratio (Kz/Kr): 0.1

WELL DATA (MW-30)

Initial Displacement: 7. ft Static Water Column Height: 21.72 ft
Total Well Penetration Depth: 21.72 ft Screen Length: 4.8 ft
Casing Radius: 0.08333 ft Wellbore Radius: 0.159 ft

SOLUTION

Aquifer Model: Unconfined Solution Method: Hvorslev

K = 1.775 ft/day y0 = 6.793 ft

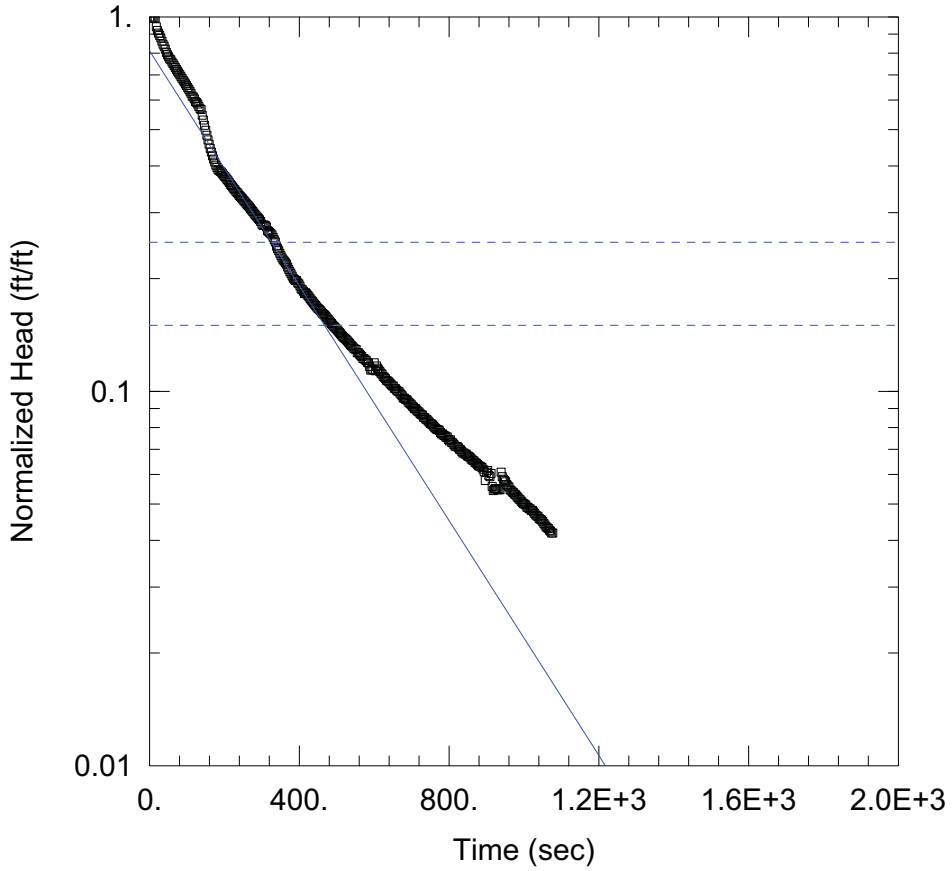

MW-30 TEST 3

Data Set: J:\...\MW-30 test 3.aqt
Date: 04/26/07 Time: 23:10:04

PROJECT INFORMATION

Company: GZA GeoEnvironmental
Client: Indian Point Energy Center
Project: 41.0017869.10
Location: Buchanan, New York
Test Well: MW-30 (45.0-49.8)
Test Date: 11/22/05

AQUIFER DATA

Saturated Thickness: 300. ft Anisotropy Ratio (Kz/Kr): 0.1

WELL DATA (MW-30 Test 3)

Initial Displacement: 10. ft Static Water Column Height: 21.73 ft
Total Well Penetration Depth: 21.73 ft Screen Length: 4.8 ft
Casing Radius: 0.08333 ft Wellbore Radius: 0.159 ft

SOLUTION

Aquifer Model: Unconfined Solution Method: Hvorslev

K = 1.029 ft/day y0 = 8.115 ft

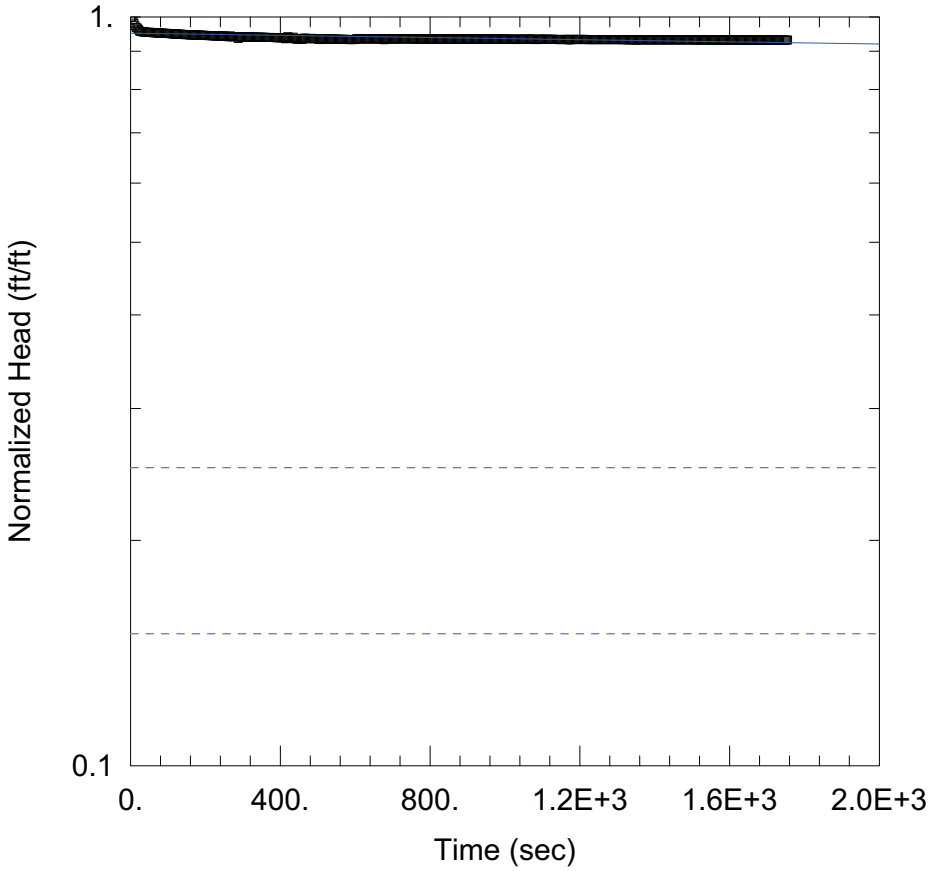

MW-30 TEST 2

Data Set: J:\...\MW-30 test 2.aqt
Date: 04/26/07 Time: 23:10:12

PROJECT INFORMATION

Company: GZA GeoEnvironmental
Client: Indian Point Energy Center
Project: 41.0017869.10
Location: Buchanan, New York
Test Well: MW-30 (48.2-53.0)
Test Date: 11/22/05

AQUIFER DATA

Saturated Thickness: 300. ft Anisotropy Ratio (Kz/Kr): 0.1

WELL DATA (MW-30 Test 2)

Initial Displacement: 15. ft Static Water Column Height: 25.53 ft
Total Well Penetration Depth: 25.53 ft Screen Length: 4.8 ft
Casing Radius: 0.08333 ft Wellbore Radius: 0.159 ft

SOLUTION

Aquifer Model: Unconfined Solution Method: Hvorslev

K = 0.004766 ft/day y0 = 14.27 ft

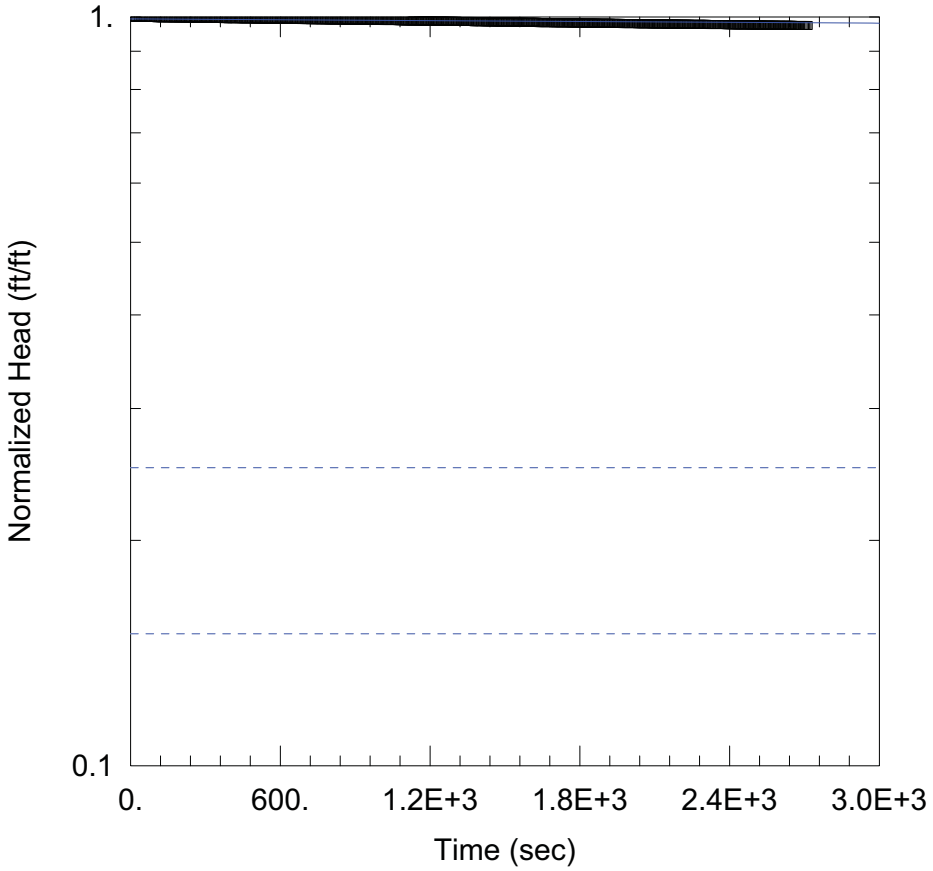

MW-30 TEST 1

Data Set: J:\...\MW-30 test 1.aqt
Date: 04/26/07 Time: 23:10:19

PROJECT INFORMATION

Company: GZA GeoEnvironmental
Client: Indian Point Energy Center
Project: 41.0017869.10
Location: Buchanan, New York
Test Well: MW-30 (52.3-61.7)
Test Date: 11/22/05

AQUIFER DATA

Saturated Thickness: 300. ft Anisotropy Ratio (Kz/Kr): 0.1

WELL DATA (MW-30 Test 1)

Initial Displacement: 19.9 ft Static Water Column Height: 21.15 ft
Total Well Penetration Depth: 21.15 ft Screen Length: 9.6 ft
Casing Radius: 0.08333 ft Wellbore Radius: 0.159 ft

SOLUTION

Aquifer Model: Unconfined Solution Method: Hvorslev

K = 0.0007118 ft/day y0 = 19.78 ft

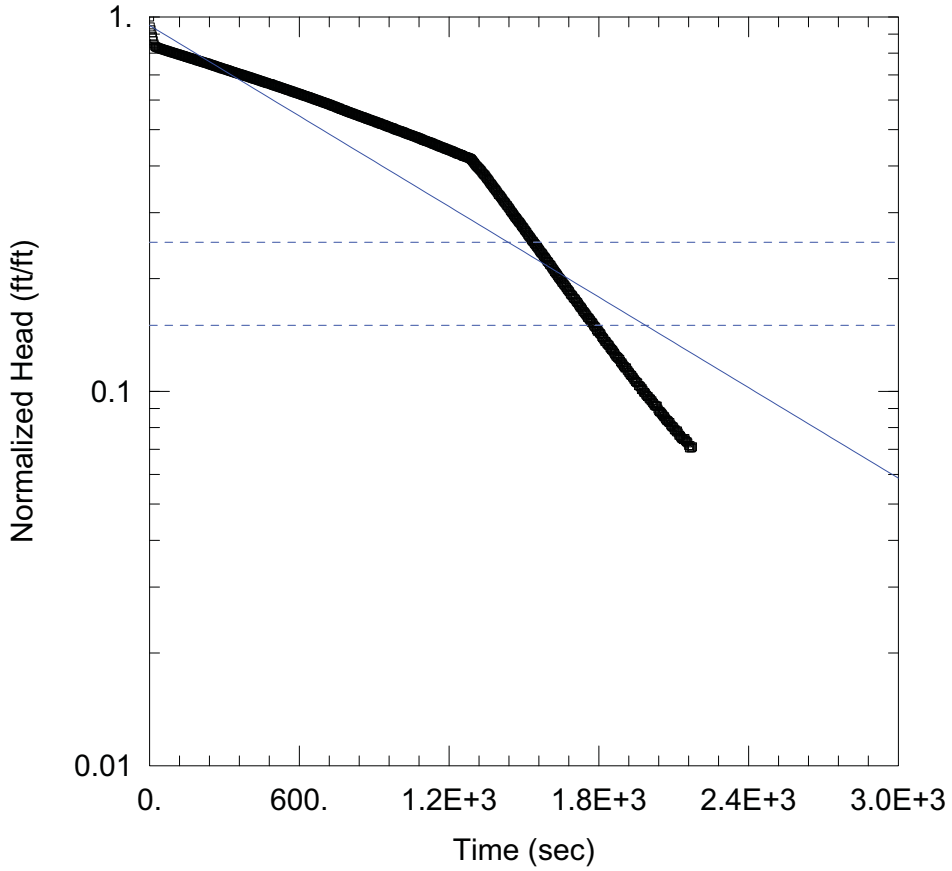

MW-31 TEST 7

Data Set: J:\...\MW-31 test 7.aqt
Date: 04/19/07 Time: 14:04:02

PROJECT INFORMATION

Company: GZA GeoEnvironmental
Client: Indian Point Energy Center
Project: 41.0017869.10
Location: Buchanan, New York
Test Well: MW-31 (34.5-43.1)
Test Date: 01/18/06

AQUIFER DATA

Saturated Thickness: 300. ft Anisotropy Ratio (Kz/Kr): 0.1

WELL DATA (MW-31 Test 7)

Initial Displacement: 10. ft Static Water Column Height: 10.45 ft
Total Well Penetration Depth: 10.45 ft Screen Length: 8.6 ft
Casing Radius: 0.08333 ft Wellbore Radius: 0.159 ft

SOLUTION

Aquifer Model: Unconfined Solution Method: Hvorslev

K = 0.1665 ft/day y0 = 9.491 ft

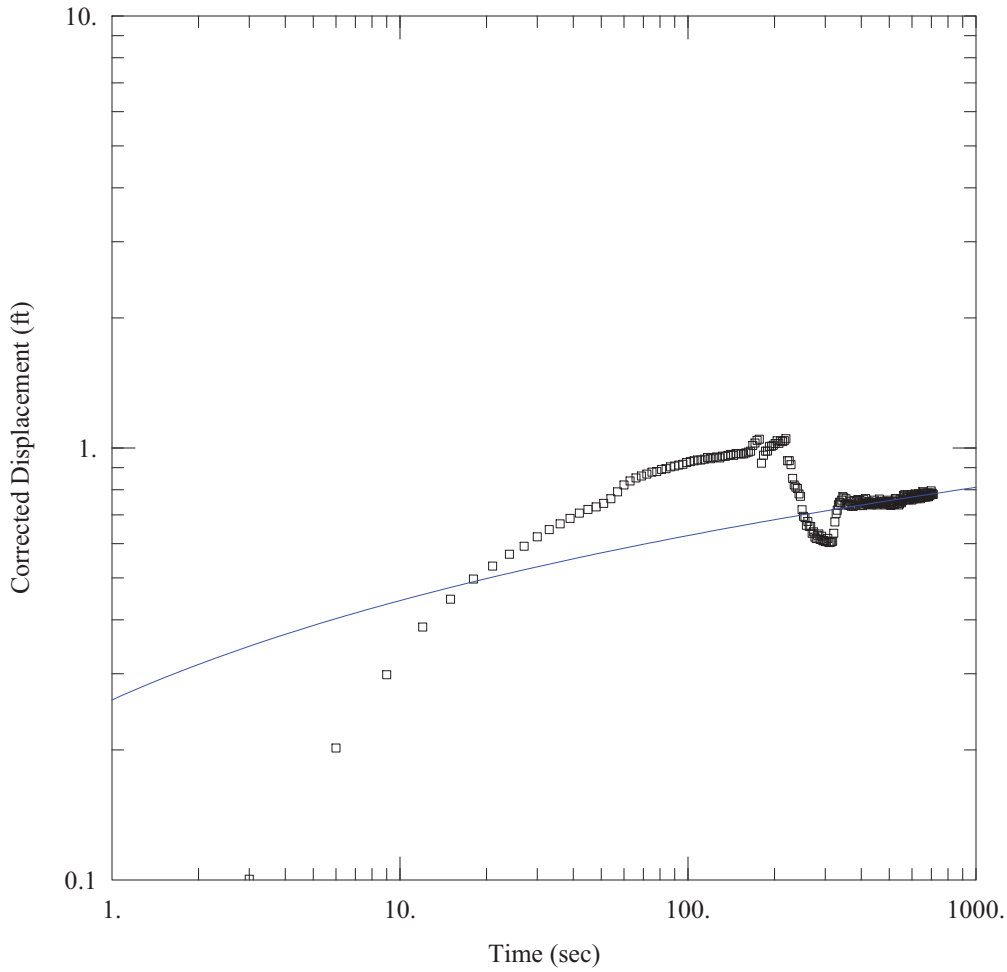

MW-31 PACKERED EXTRACTION (TEST 6)

Data Set: J:\...\MW-31 test 6theis.aqt
Date: 09/10/07 Time: 16:42:33

PROJECT INFORMATION

Company: GZA GeoEnvironmental
Client: Indian Point Energy Center
Project: 41.0017869.10
Location: Buchanan, NY
Test Well: MW-31 (42.9-51.5)
Test Date: 1/18/06

WELL DATA

Pumping Wells

Well Name	X (ft)	Y (ft)
MW-31	0	0

Observation Wells

Well Name	X (ft)	Y (ft)
▫ MW-31 test6	0	0

SOLUTION

Aquifer Model: Unconfined
Solution Method: Theis

T = 249.6 ft^2/day
S = 0.009958
Kz/Kr = 1.
b = 50. ft

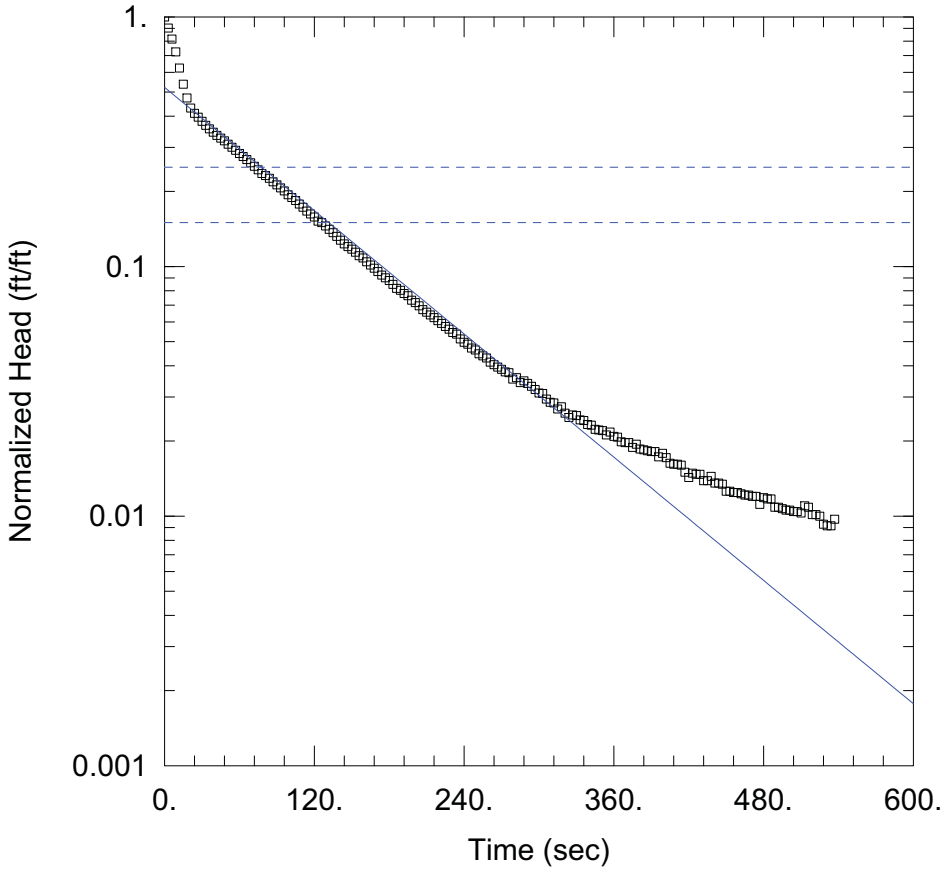

MW-31 TEST 5

Data Set: J:\...\MW-31 test 5.aqt
Date: 04/19/07 Time: 14:02:08

PROJECT INFORMATION

Company: GZA GeoEnvironmental
Client: Indian Point Energy Center
Project: 41.0017869.10
Location: Buchanan, New York
Test Well: MW-31 (50.9-59.5)
Test Date: 01/18/06

AQUIFER DATA

Saturated Thickness: 300. ft Anisotropy Ratio (Kz/Kr): 0.1

WELL DATA (MW-31 Test 5)

Initial Displacement: 7. ft Static Water Column Height: 19.5 ft
Total Well Penetration Depth: 19.5 ft Screen Length: 8.6 ft
Casing Radius: 0.08333 ft Wellbore Radius: 0.159 ft

SOLUTION

Aquifer Model: Unconfined Solution Method: Hvorslev

K = 1.699 ft/day y0 = 3.654 ft

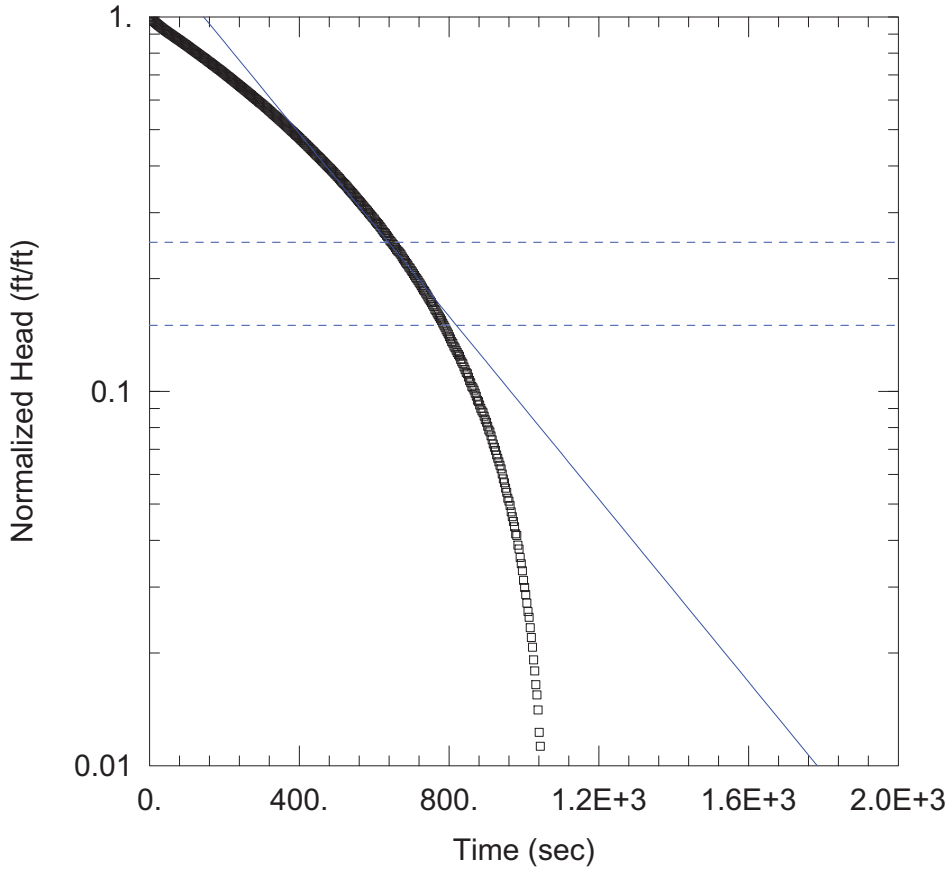

MW-31 TEST 4

Data Set: J:\...\MW-31 test 4.aqt
Date: 09/10/07 Time: 16:43:37

PROJECT INFORMATION

Company: GZA GeoEnvironmental
Client: Indian Point Energy Center
Project: 41.0017869.10
Location: Buchanan, New York
Test Well: MW-31 (58.4-67.0)
Test Date: 01/18/06

AQUIFER DATA

Saturated Thickness: 300. ft Anisotropy Ratio (Kz/Kr): 0.1

WELL DATA (MW-31 Test 4)

Initial Displacement: 11. ft Static Water Column Height: 34.4 ft
Total Well Penetration Depth: 34.4 ft Screen Length: 8.6 ft
Casing Radius: 0.08333 ft Wellbore Radius: 0.159 ft

SOLUTION

Aquifer Model: Unconfined Solution Method: Hvorslev

K = 0.5041 ft/day y0 = 16.53 ft

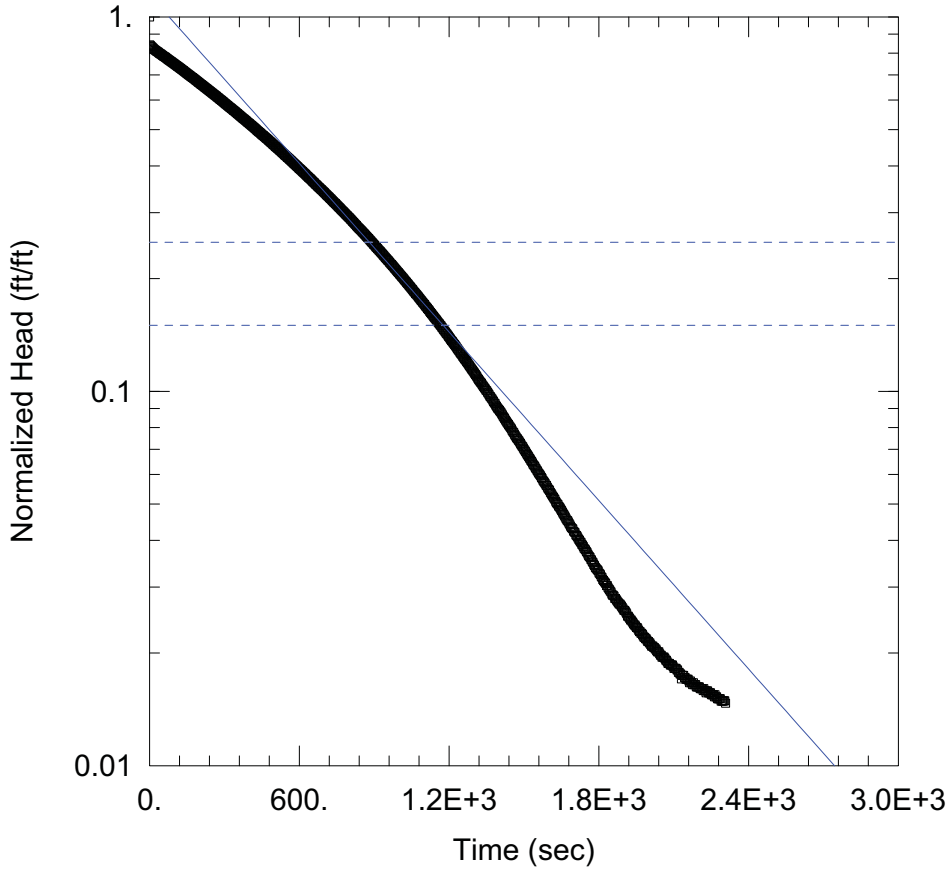

MW-31 TEST 3

Data Set: J:\...\MW-31 test 3.aqt
Date: 04/19/07 Time: 13:59:41

PROJECT INFORMATION

Company: GZA GeoEnvironmental
Client: Indian Point Energy Center
Project: 41.0017869.10
Location: Buchanan, New York
Test Well: MW-31 (65.4-74.0)
Test Date: 01/18/06

AQUIFER DATA

Saturated Thickness: 300. ft Anisotropy Ratio (Kz/Kr): 0.1

WELL DATA (MW-31 Test 3)

Initial Displacement: 27. ft Static Water Column Height: 41.3 ft
Total Well Penetration Depth: 41.3 ft Screen Length: 8.6 ft
Casing Radius: 0.08333 ft Wellbore Radius: 0.159 ft

SOLUTION

Aquifer Model: Unconfined Solution Method: Hvorslev

K = 0.3098 ft/day y0 = 30.91 ft

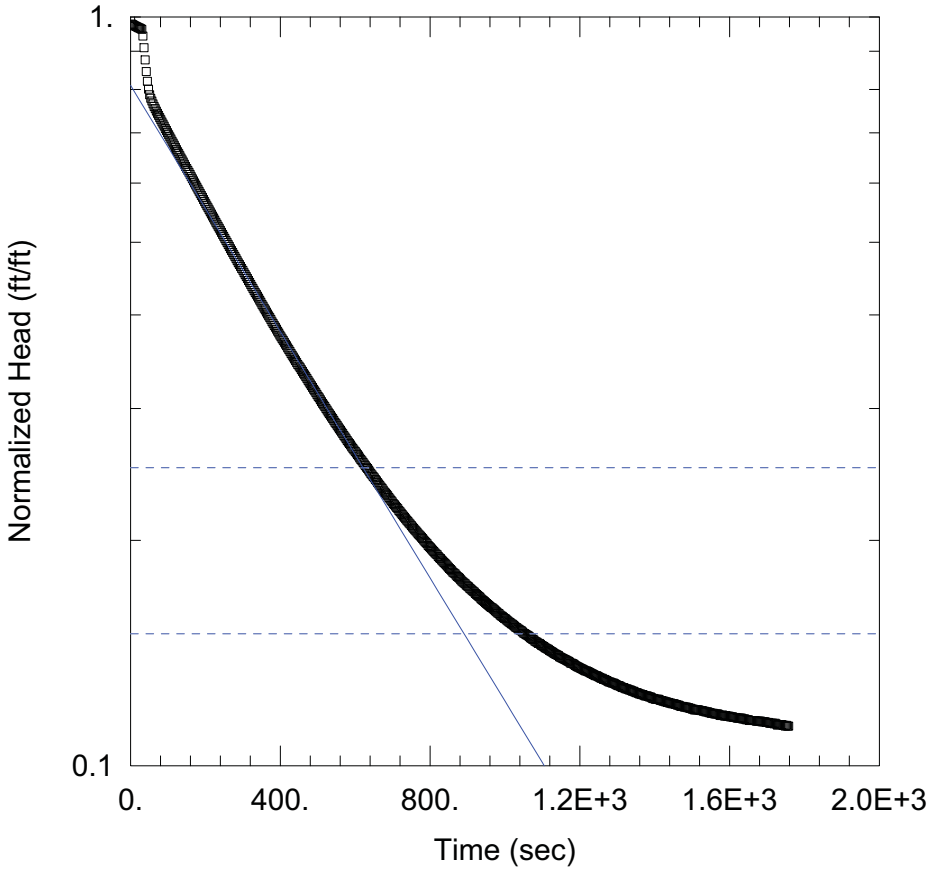

MW-31 TEST 2

Data Set: J:\...\MW-31 test 2.aqt
Date: 04/19/07 Time: 13:59:09

PROJECT INFORMATION

Company: GZA GeoEnvironmental
Client: Indian Point Energy Center
Project: 41.0017869.10
Location: Buchanan, New York
Test Well: MW-31 (73.4-82.0)
Test Date: 01/17/06

AQUIFER DATA

Saturated Thickness: 300. ft Anisotropy Ratio (Kz/Kr): 0.1

WELL DATA (MW-31 Test 2)

Initial Displacement: 21. ft Static Water Column Height: 48.2 ft
Total Well Penetration Depth: 48.2 ft Screen Length: 8.6 ft
Casing Radius: 0.08333 ft Wellbore Radius: 0.159 ft

SOLUTION

Aquifer Model: Unconfined Solution Method: Hvorslev

K = 0.3396 ft/day y0 = 17.02 ft

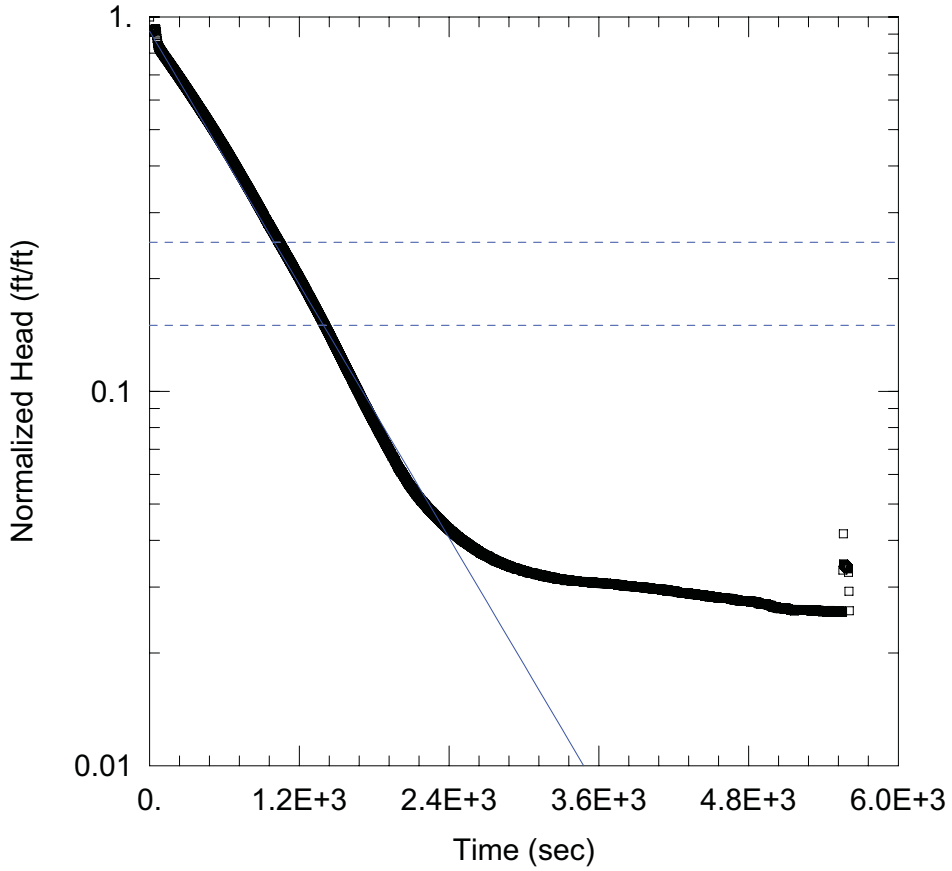

MW-31 TEST 1

Data Set: J:\...\MW-31 test 1.aqt
Date: 04/19/07 Time: 13:58:30

PROJECT INFORMATION

Company: GZA GeoEnvironmental
Client: Indian Point Energy Center
Project: 41.0017869.10
Location: Buchanan, New York
Test Well: MW-31 (79.9-90.0)
Test Date: 01/16/06

AQUIFER DATA

Saturated Thickness: 300. ft Anisotropy Ratio (Kz/Kr): 0.1

WELL DATA (MW-31 Test 1)

Initial Displacement: 39.9 ft Static Water Column Height: 57.2 ft
Total Well Penetration Depth: 57.2 ft Screen Length: 10.1 ft
Casing Radius: 0.08333 ft Wellbore Radius: 0.159 ft

SOLUTION

Aquifer Model: Unconfined Solution Method: Hvorslev

K = 0.2045 ft/day y0 = 36.58 ft

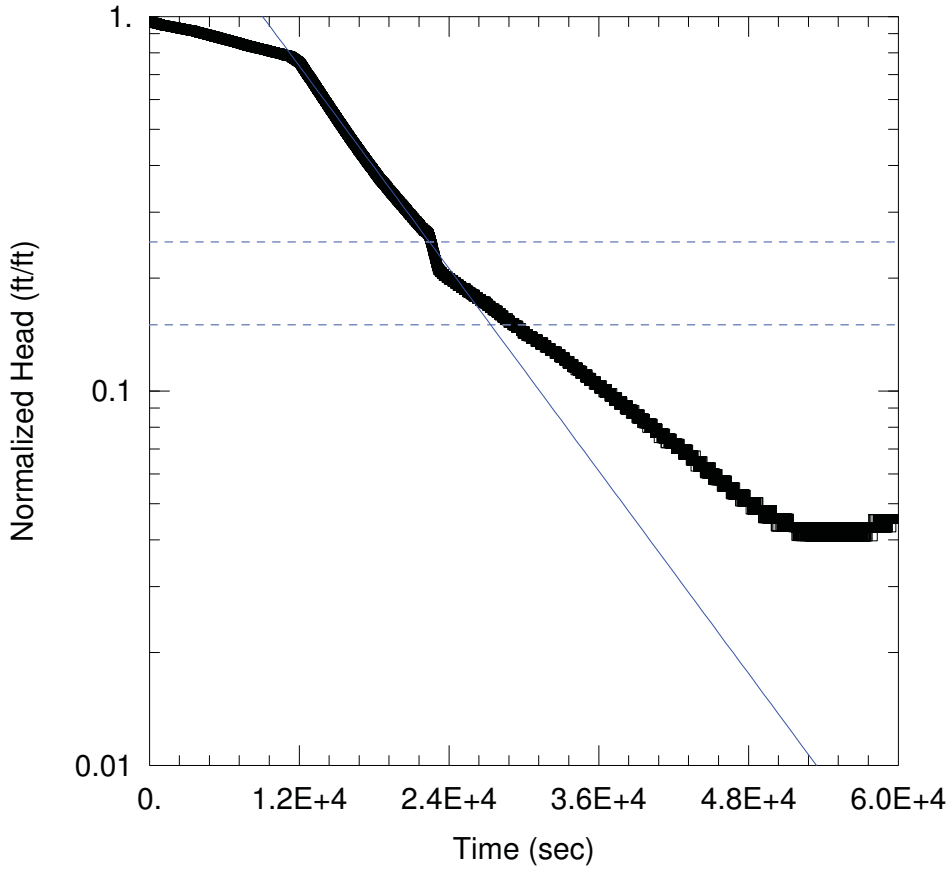

MW-32 TEST 8

Data Set: J:\...\MW-32 test 8(70-80).aqt
Date: 01/03/08 Time: 15:09:23

PROJECT INFORMATION

Company: GZA GeoEnvironmental
Client: Indian Point Energy Center
Project: 41.0017869.10
Location: Buchanan, New York
Test Well: MW-32 (69.4-79.4)
Test Date: 03/30/06

AQUIFER DATA

Saturated Thickness: 300. ft Anisotropy Ratio (Kz/Kr): 0.1

WELL DATA (MW-32 Test 8)

Initial Displacement: 9. ft Static Water Column Height: 11.29 ft
Total Well Penetration Depth: 11.29 ft Screen Length: 10. ft
Casing Radius: 0.08333 ft Wellbore Radius: 0.159 ft

SOLUTION

Aquifer Model: Confined Solution Method: Hvorslev

K = 0.01648 ft/day y0 = 23.09 ft

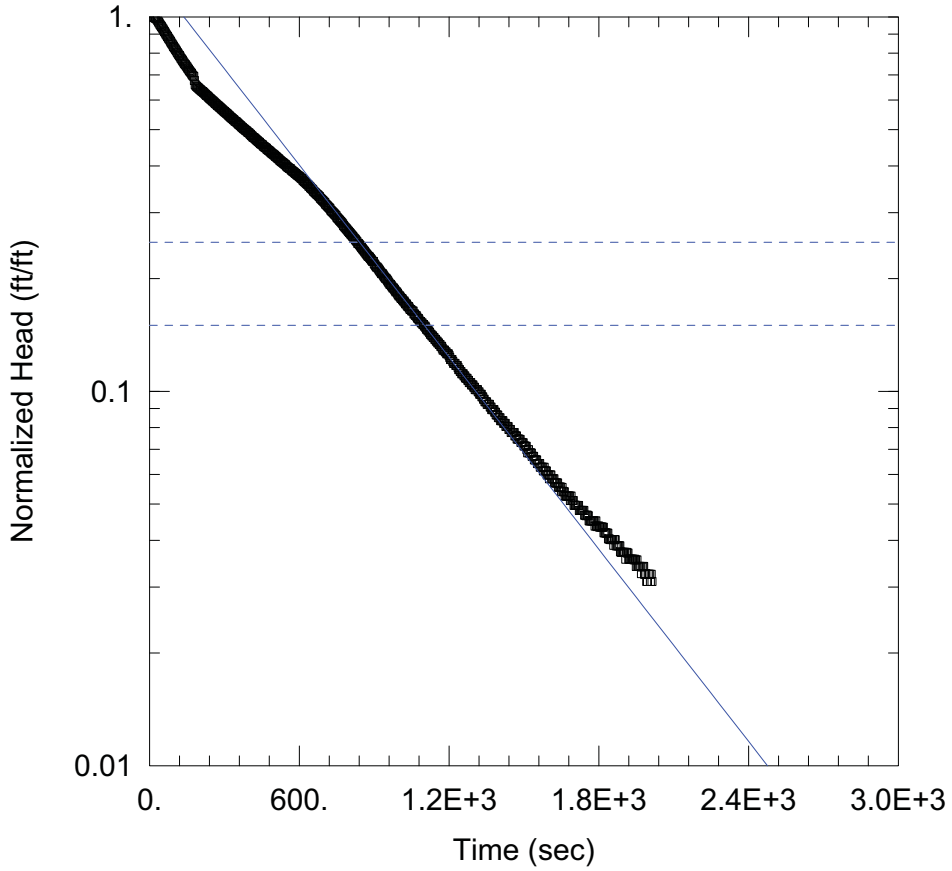

MW-32 TEST 7

Data Set: J:\...\MW-32 test 7(80-90).aqt
Date: 04/19/07 Time: 14:16:09

PROJECT INFORMATION

Company: GZA GeoEnvironmental
Client: Indian Point Energy Center
Project: 41.0017869.10
Location: Buchanan, New York
Test Well: MW-32 (79.4-89.4)
Test Date: 03/29/06

AQUIFER DATA

Saturated Thickness: 300. ft Anisotropy Ratio (Kz/Kr): 0.1

WELL DATA (MW-32 Test 7)

Initial Displacement: 15. ft Static Water Column Height: 21.29 ft
Total Well Penetration Depth: 21.29 ft Screen Length: 10. ft
Casing Radius: 0.08333 ft Wellbore Radius: 0.159 ft

SOLUTION

Aquifer Model: Confined Solution Method: Hvorslev

K = 0.3127 ft/day y0 = 19.68 ft

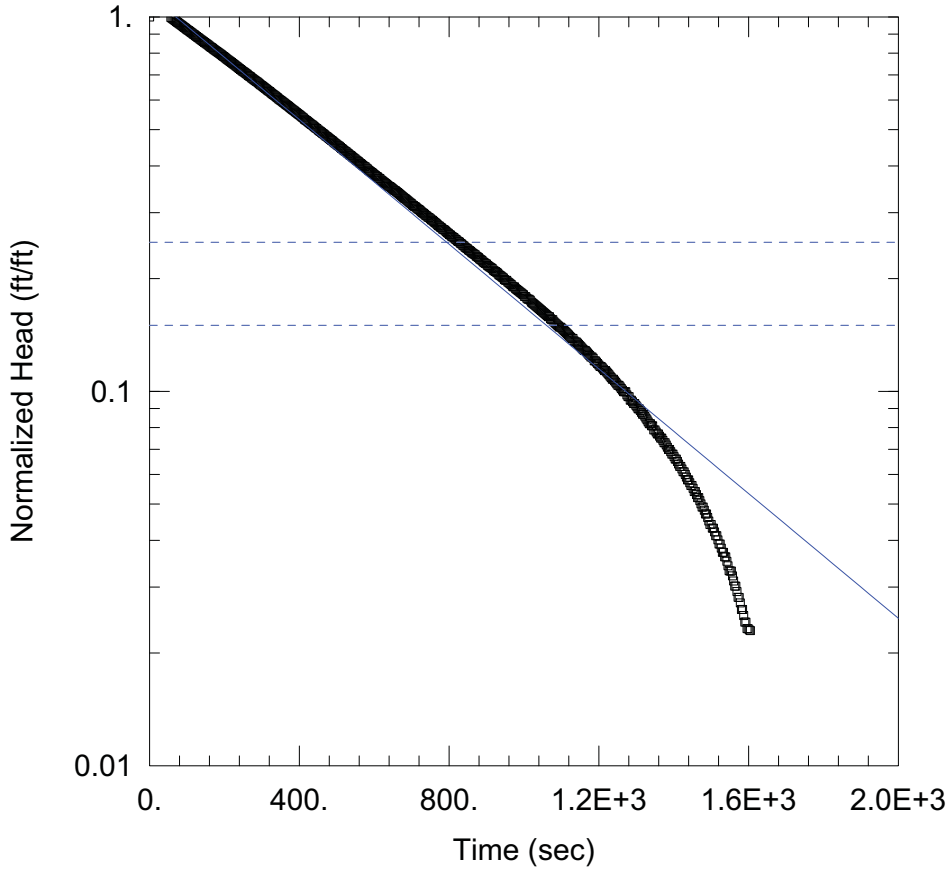

MW-32 TEST 6

Data Set: J:\...\MW-32 test 6(117-127).aqt
Date: 04/19/07 Time: 14:15:22

PROJECT INFORMATION

Company: GZA GeoEnvironmental
Client: Indian Point Energy Center
Project: 41.0017869.10
Location: Buchanan, New York
Test Well: MW-32 (116.4-126.4)
Test Date: 03/29/06

AQUIFER DATA

Saturated Thickness: 300. ft Anisotropy Ratio (Kz/Kr): 0.1

WELL DATA (MW-32 Test 6)

Initial Displacement: 22. ft Static Water Column Height: 58.29 ft
Total Well Penetration Depth: 58.29 ft Screen Length: 10. ft
Casing Radius: 0.08333 ft Wellbore Radius: 0.159 ft

SOLUTION

Aquifer Model: Confined Solution Method: Hvorslev

K = 0.3043 ft/day y0 = 25.18 ft

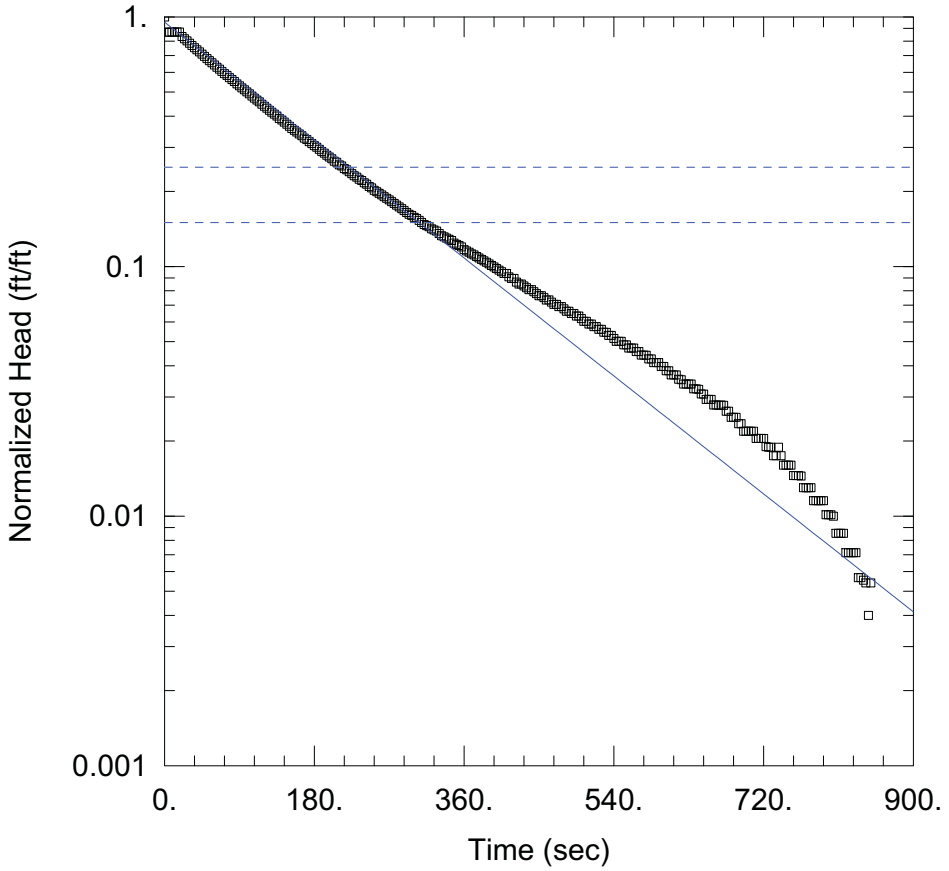

MW-32 TEST 5

Data Set: J:\...\MW-32 test 5(131-141).aqt
Date: 04/19/07 Time: 14:14:52

PROJECT INFORMATION

Company: GZA GeoEnvironmental
Client: Indian Point Energy Center
Project: 41.0017869.10
Location: Buchanan, New York
Test Well: MW-32 (130.4-140.4)
Test Date: 03/29/06

AQUIFER DATA

Saturated Thickness: 300. ft Anisotropy Ratio (Kz/Kr): 0.1

WELL DATA (MW-32 Test 5)

Initial Displacement: 15. ft Static Water Column Height: 72.3 ft
Total Well Penetration Depth: 72.3 ft Screen Length: 10. ft
Casing Radius: 0.08333 ft Wellbore Radius: 0.159 ft

SOLUTION

Aquifer Model: Confined Solution Method: Hvorslev

K = 0.9598 ft/day y0 = 14.3 ft

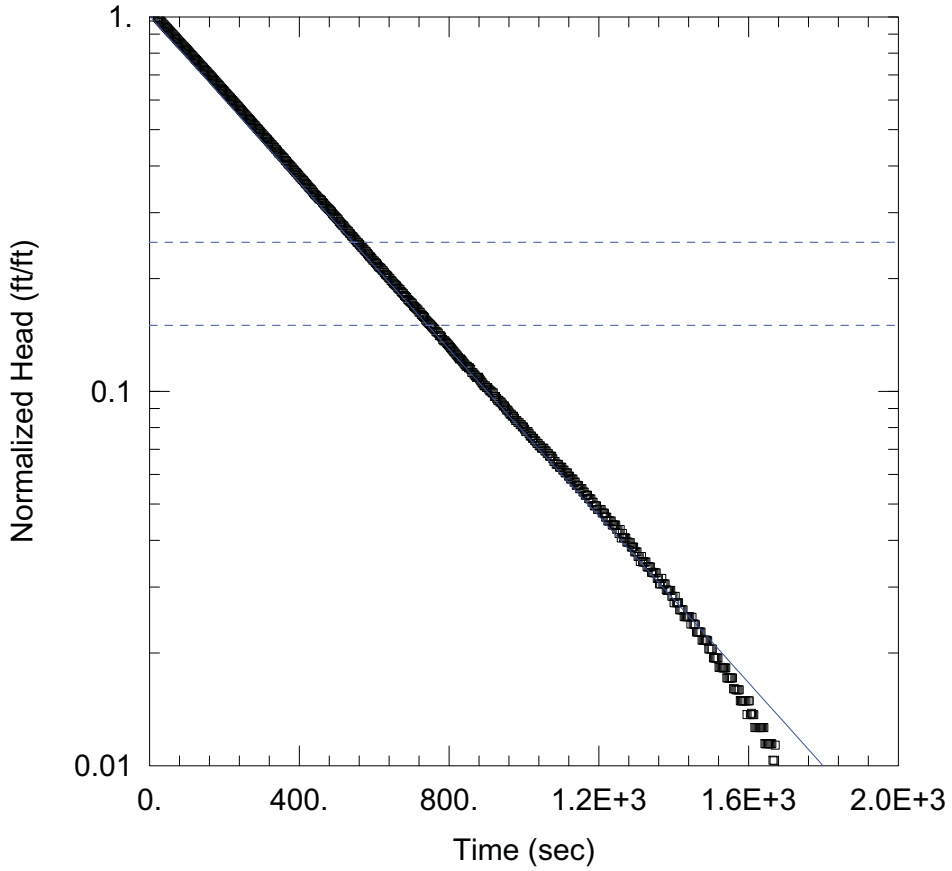

MW-32 TEST 4

Data Set: J:\...\MW-32 test 4(148-158).aqt
Date: 04/19/07 Time: 14:14:21

PROJECT INFORMATION

Company: GZA GeoEnvironmental
Client: Indian Point Energy Center
Project: 41.0017869.10
Location: Buchanan, New York
Test Well: MW-32 (147.4-157.4)
Test Date: 03/28/06

AQUIFER DATA

Saturated Thickness: 300. ft Anisotropy Ratio (Kz/Kr): 0.1

WELL DATA (MW-32 Test 4)

Initial Displacement: 20. ft Static Water Column Height: 89.29 ft
Total Well Penetration Depth: 89.29 ft Screen Length: 10. ft
Casing Radius: 0.08333 ft Wellbore Radius: 0.159 ft

SOLUTION

Aquifer Model: Unconfined Solution Method: Hvorslev

K = 0.407 ft/day y0 = 20.14 ft

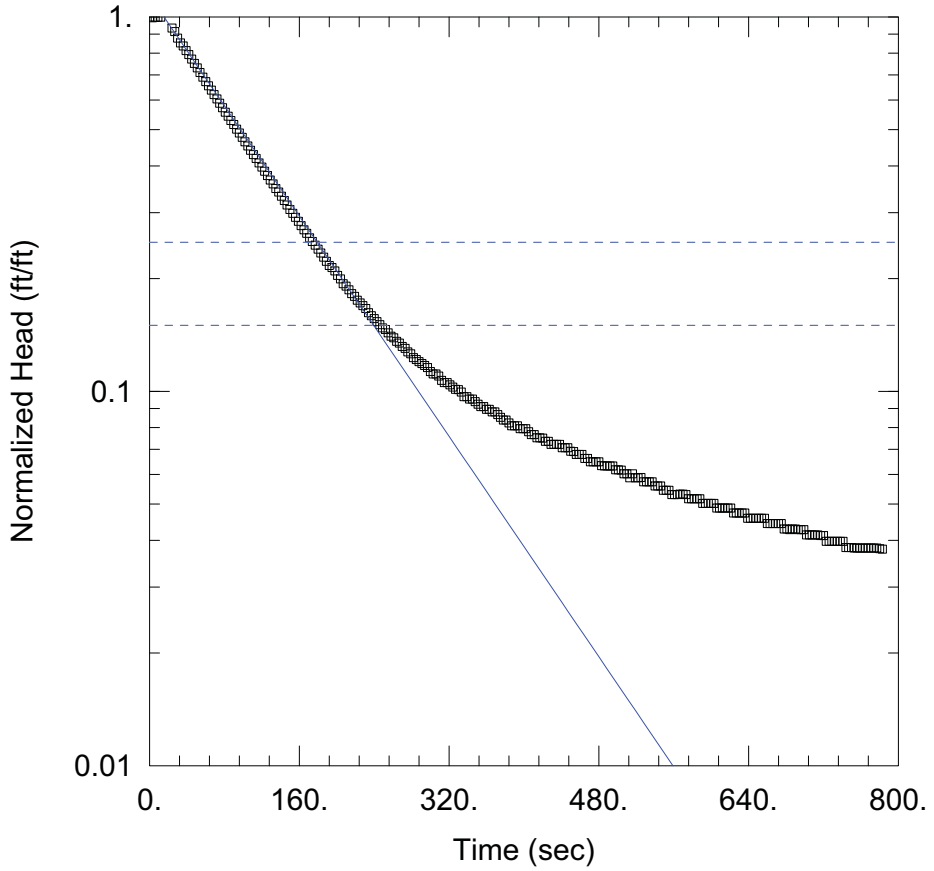

MW-32 TEST 3

Data Set: J:\...\MW-32 test 3(170-180).aqt
Date: 04/19/07 Time: 14:13:43

PROJECT INFORMATION

Company: GZA GeoEnvironmental
Client: Indian Point Energy Center
Project: 41.0017869.10
Location: Buchanan, New York
Test Well: MW-32 (169.4-179.4)
Test Date: 03/27/06

AQUIFER DATA

Saturated Thickness: 50. ft Anisotropy Ratio (Kz/Kr): 1.

WELL DATA (MW-32 Test 3)

Initial Displacement: 15. ft Static Water Column Height: 111.3 ft
Total Well Penetration Depth: 111.3 ft Screen Length: 10. ft
Casing Radius: 0.08333 ft Wellbore Radius: 0.159 ft

SOLUTION

Aquifer Model: Unconfined Solution Method: Hvorslev

K = 1.052 ft/day y0 = 17.1 ft

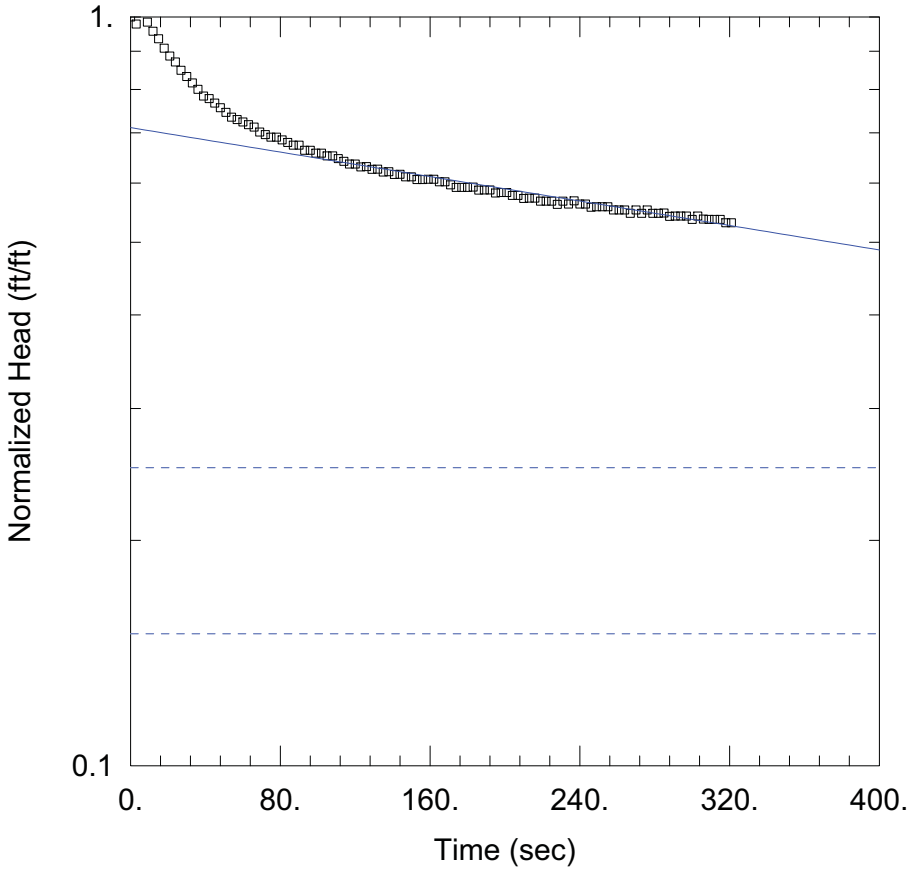

MW-32 TEST 2

Data Set: J:\...\MW-32 test 2(175-185).aqt
Date: 04/19/07 Time: 14:13:15

PROJECT INFORMATION

Company: GZA GeoEnvironmental
Client: Indian Point Energy Center
Project: 41.0017869.10
Location: Buchanan, New York
Test Well: MW-32 (184.4-174.4)
Test Date: 03/27/06

AQUIFER DATA

Saturated Thickness: 300. ft Anisotropy Ratio (Kz/Kr): 0.1

WELL DATA (MW-32 Test 2)

Initial Displacement: 4. ft Static Water Column Height: 116.3 ft
Total Well Penetration Depth: 116.3 ft Screen Length: 10. ft
Casing Radius: 0.08333 ft Wellbore Radius: 0.159 ft

SOLUTION

Aquifer Model: Unconfined Solution Method: Hvorslev

K = 0.1493 ft/day y0 = 2.846 ft

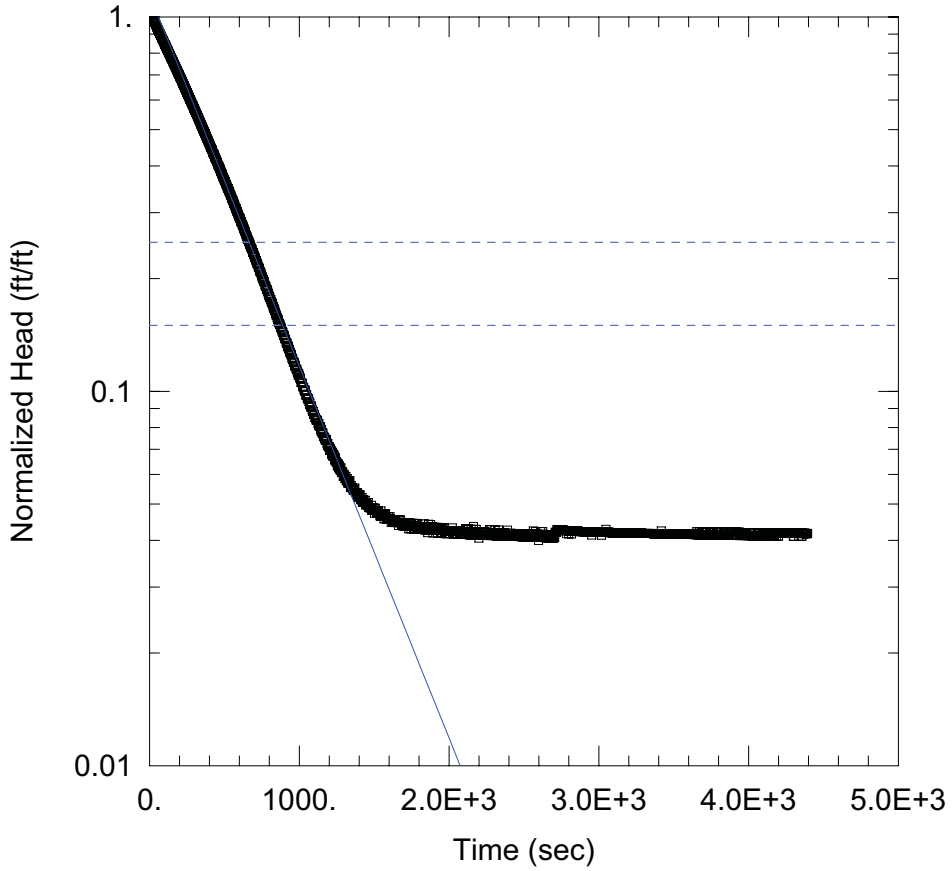

MW-32 TEST 1

Data Set: J:\...\MW-32 test 1(195-185).aqt
Date: 04/19/07 Time: 14:12:28

PROJECT INFORMATION

Company: GZA GeoEnvironmental
Client: Indian Point Energy Center
Project: 41.0017869.10
Location: Buchanan, New York
Test Well: MW-32 (184.4-194.4)
Test Date: 03/27/06

AQUIFER DATA

Saturated Thickness: 300. ft Anisotropy Ratio (Kz/Kr): 0.1

WELL DATA (MW-32 Test 1)

Initial Displacement: 28. ft Static Water Column Height: 126.3 ft
Total Well Penetration Depth: 126.3 ft Screen Length: 10. ft
Casing Radius: 0.08333 ft Wellbore Radius: 0.159 ft

SOLUTION

Aquifer Model: Unconfined Solution Method: Hvorslev

K = 0.3628 ft/day y0 = 32.07 ft

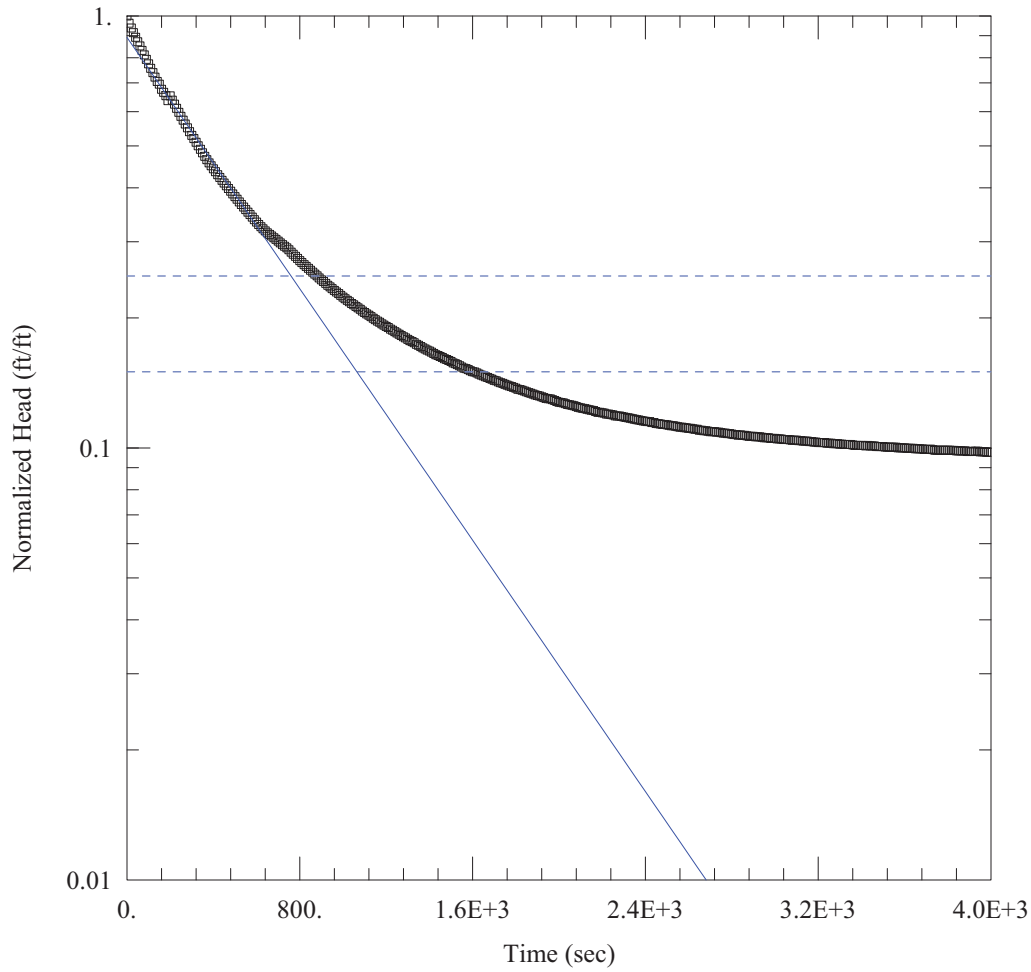

MW-33 EXTRACTION TEST

Data Set: J:\...\sy33 MW33.aqt
Date: 09/11/07 Time: 18:39:06

PROJECT INFORMATION

Company: GZA GeoEnvironmental
Client: Indian Point Energy Center
Project: 41.0017869.10
Location: Buchanan, NY
Test Well: MW-33
Test Date: 3/8/06

AQUIFER DATA

Saturated Thickness: 300. ft
Anisotropy Ratio (Kz/Kr): 0.1

WELL DATA (MW-33)

Initial Displacement: 7.155 ft
Static Water Column Height: 21. ft
Total Well Penetration Depth: 20. ft
Screen Length: 20. ft
Casing Radius: 0.159 ft
Wellbore Radius: 0.159 ft

SOLUTION

Aquifer Model: Unconfined
Solution Method: Hvorslev

K = 0.5475 ft/day
y0 = 6.382 ft

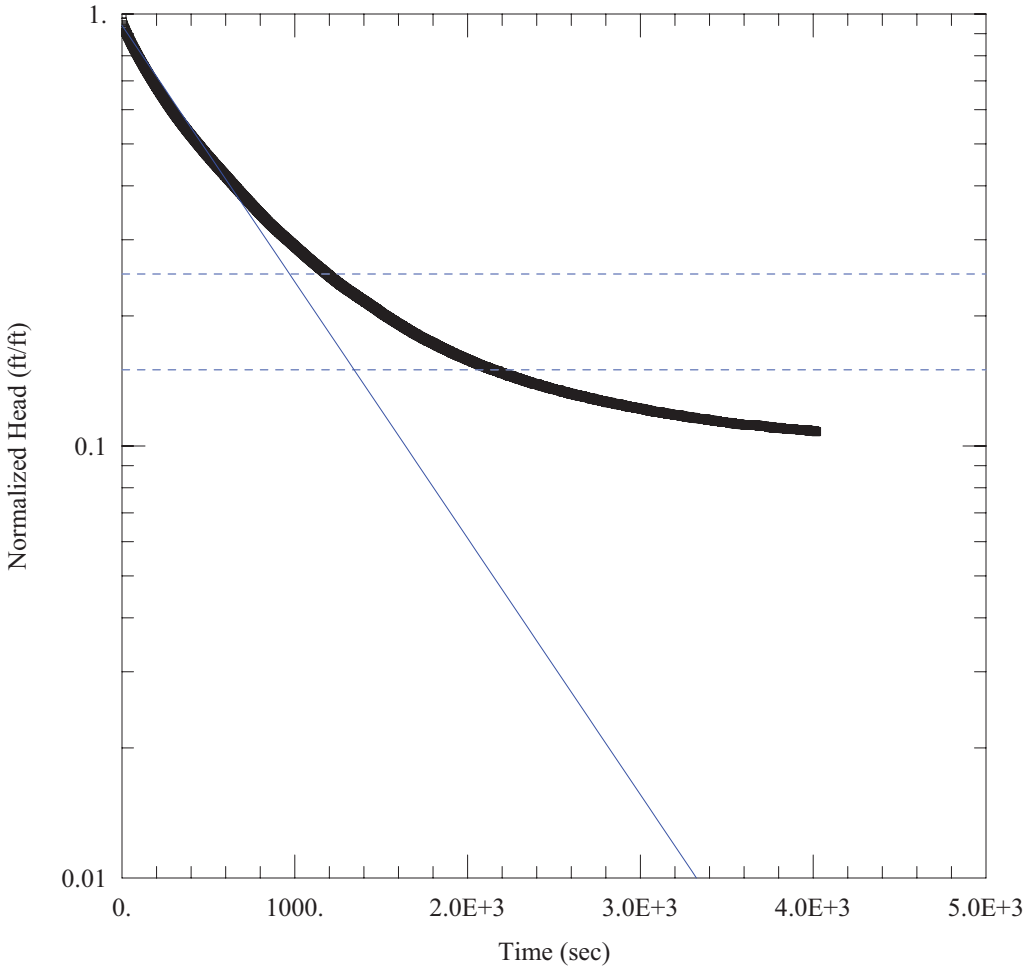

MW-34 EXTRACTION TEST

Data Set: J:\...\sy34 MW34.aqt
Date: 09/11/07 Time: 18:39:25

PROJECT INFORMATION

Company: GZA GeoEnvironmental
Client: Indian Point Energy Center
Project: 41.0017869.10
Location: Buchanan, NY
Test Well: MW-34
Test Date: 3/8/06

AQUIFER DATA

Saturated Thickness: 300. ft
Anisotropy Ratio (Kz/Kr): 0.1

WELL DATA (MW-34)

Initial Displacement: 5.7 ft
Static Water Column Height: 21. ft
Total Well Penetration Depth: 20. ft
Screen Length: 20. ft
Casing Radius: 0.159 ft
Wellbore Radius: 0.159 ft

SOLUTION

Aquifer Model: Unconfined
Solution Method: Hvorslev

K = 0.4468 ft/day
y0 = 5.364 ft

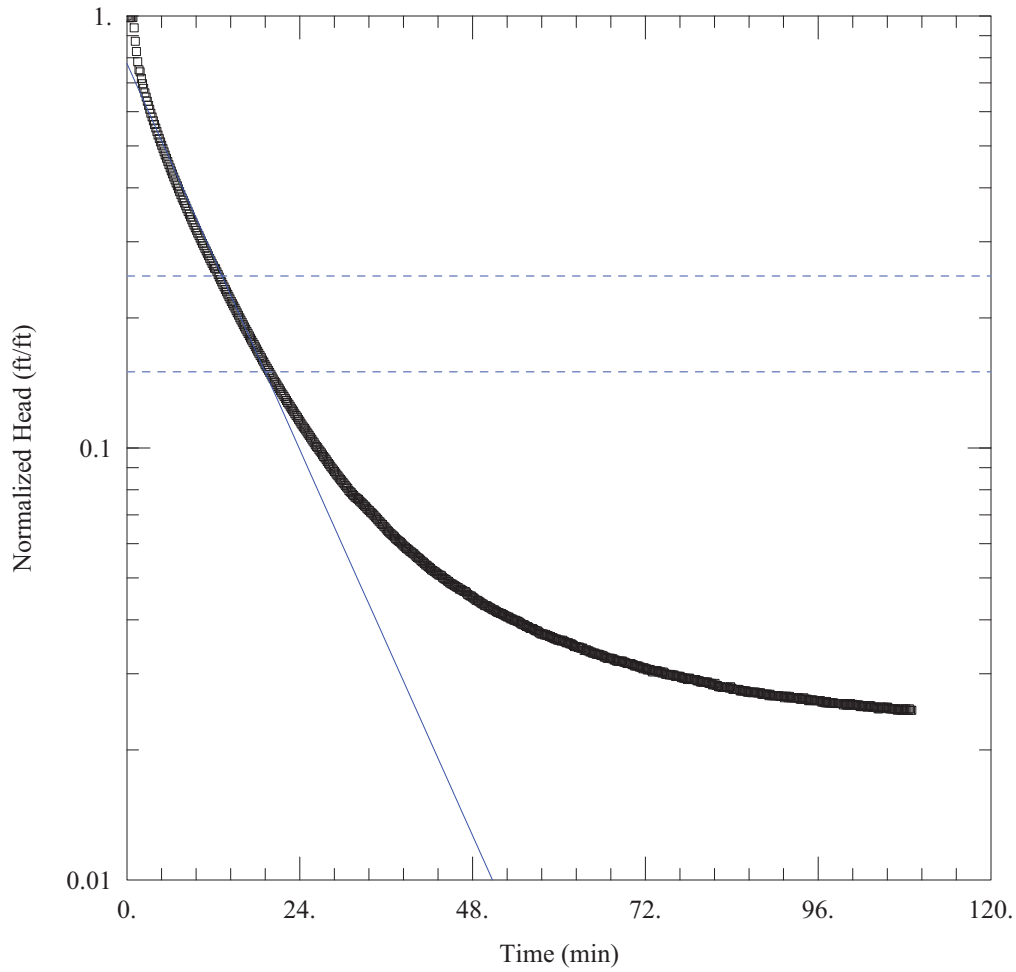

MW-35 EXTRACTION TEST

Data Set: J:\...\sy35 MW35.aqt
Date: 09/11/07 Time: 18:39:56

PROJECT INFORMATION

Company: GZA GeoEnvironmental
Client: Indian Point Energy Center
Project: 41.0017869.10
Location: Buchanan, NY
Test Well: MW-35
Test Date: 1/24/06

AQUIFER DATA

Saturated Thickness: 300. ft
Anisotropy Ratio (Kz/Kr): 0.1

WELL DATA (MW-35)

Initial Displacement: 10. ft
Static Water Column Height: 23. ft
Total Well Penetration Depth: 20. ft
Screen Length: 20. ft
Casing Radius: 0.159 ft
Wellbore Radius: 0.159 ft

SOLUTION

Aquifer Model: Unconfined
Solution Method: Hvorslev

K = 0.467 ft/day
y0 = 7.757 ft

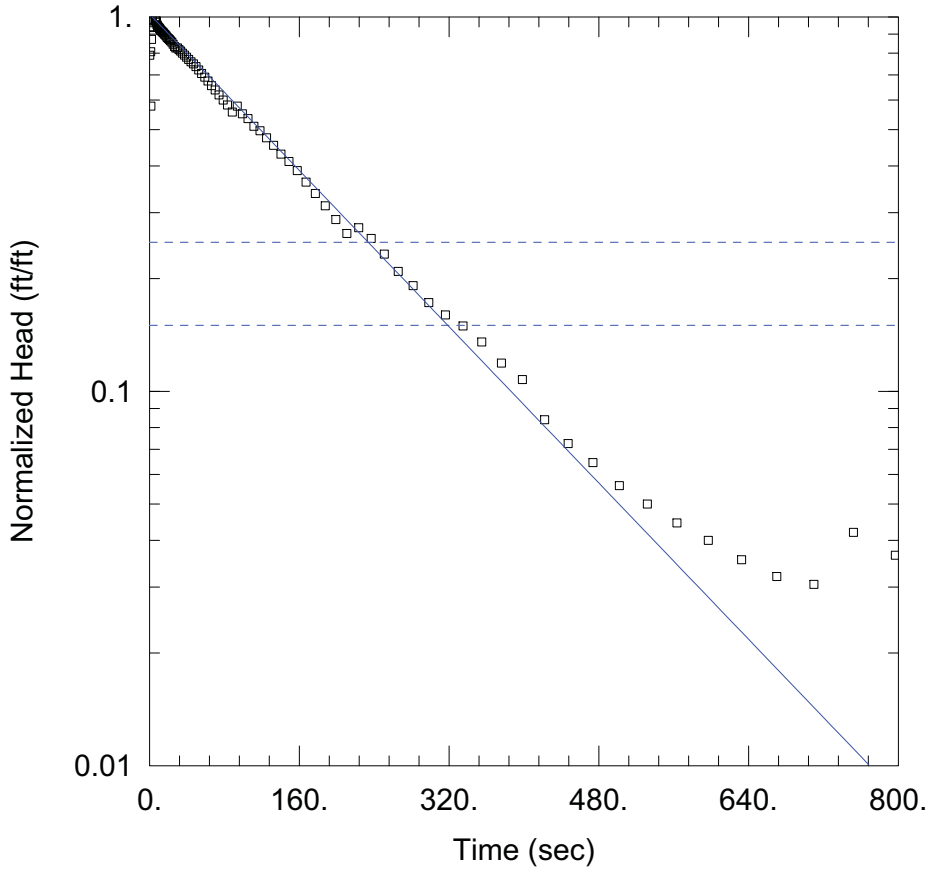

MW-36-41 SLUG TEST (RISING)

Data Set: J:\...\MW-36-41rising.aqt
Date: 04/20/07 Time: 16:43:31

PROJECT INFORMATION

Company: GZA GeoEnvironmental
Client: Indian Point Energy Center
Project: 41.0017869.10
Location: Buchanan, New York
Test Well: MW-36-41
Test Date: 4/4/06

AQUIFER DATA

Saturated Thickness: 300. ft Anisotropy Ratio (Kz/Kr): 0.1

WELL DATA (MW-36-41)

Initial Displacement: 2. ft Static Water Column Height: 36. ft
Total Well Penetration Depth: 36. ft Screen Length: 10. ft
Casing Radius: 0.04167 ft Wellbore Radius: 0.159 ft

SOLUTION

Aquifer Model: Unconfined Solution Method: Hvorslev

K = 0.2385 ft/day y0 = 2.035 ft

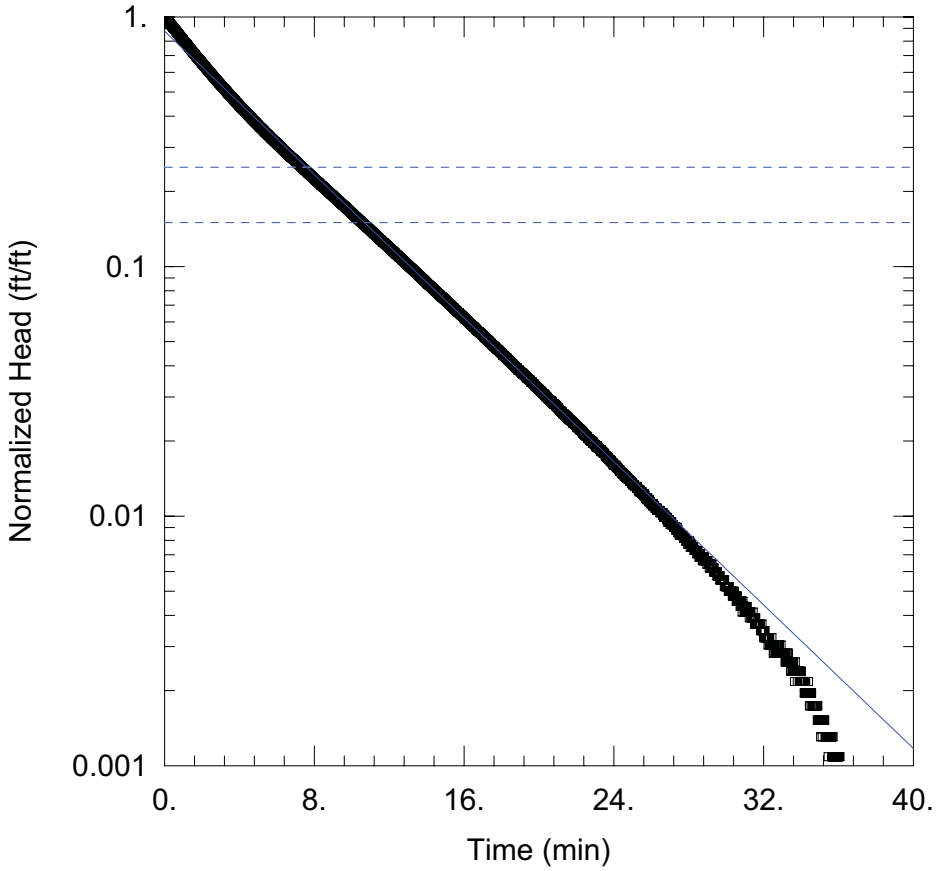

MW-36-41 SLUG TEST

Data Set: J:\...\MW-36-41Jan07.aqt
Date: 04/20/07 Time: 16:43:58

PROJECT INFORMATION

Company: GZA GeoEnvironmental
Client: Indian Point Energy Center
Project: 41.0017869.10
Location: Buchanan, New York
Test Well: MW-36-41
Test Date: 1/3/07

AQUIFER DATA

Saturated Thickness: 300. ft Anisotropy Ratio (Kz/Kr): 0.1

WELL DATA (MW-36-41)

Initial Displacement: 9.2 ft Static Water Column Height: 37. ft
Total Well Penetration Depth: 36. ft Screen Length: 10. ft
Casing Radius: 0.04167 ft Wellbore Radius: 0.159 ft

SOLUTION

Aquifer Model: Unconfined Solution Method: Hvorslev

K = 0.1094 ft/day y0 = 8.072 ft

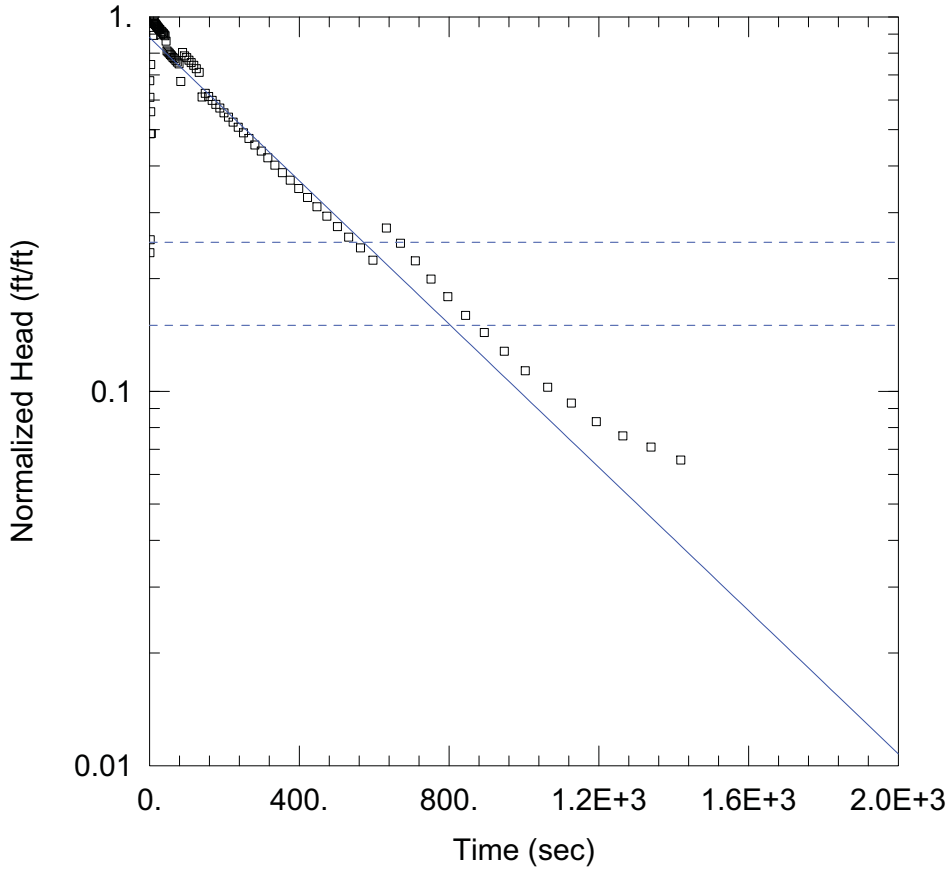

MW-36-53 SLUG TEST (RISING)

Data Set: J:\...\MW-36-53rising.aqt
Date: 04/20/07 Time: 16:44:50

PROJECT INFORMATION

Company: GZA GeoEnvironmental
Client: Indian Point Energy Center
Project: 41.0017869.10
Location: Buchanan, New York
Test Well: MW-36-53
Test Date: 4/15/06

AQUIFER DATA

Saturated Thickness: 300. ft Anisotropy Ratio (Kz/Kr): 0.1

WELL DATA (MW-36-53)

Initial Displacement: 2. ft Static Water Column Height: 47. ft
Total Well Penetration Depth: 47. ft Screen Length: 7. ft
Casing Radius: 0.04167 ft Wellbore Radius: 0.159 ft

SOLUTION

Aquifer Model: Unconfined Solution Method: Hvorslev

K = 0.1165 ft/day y0 = 1.762 ft

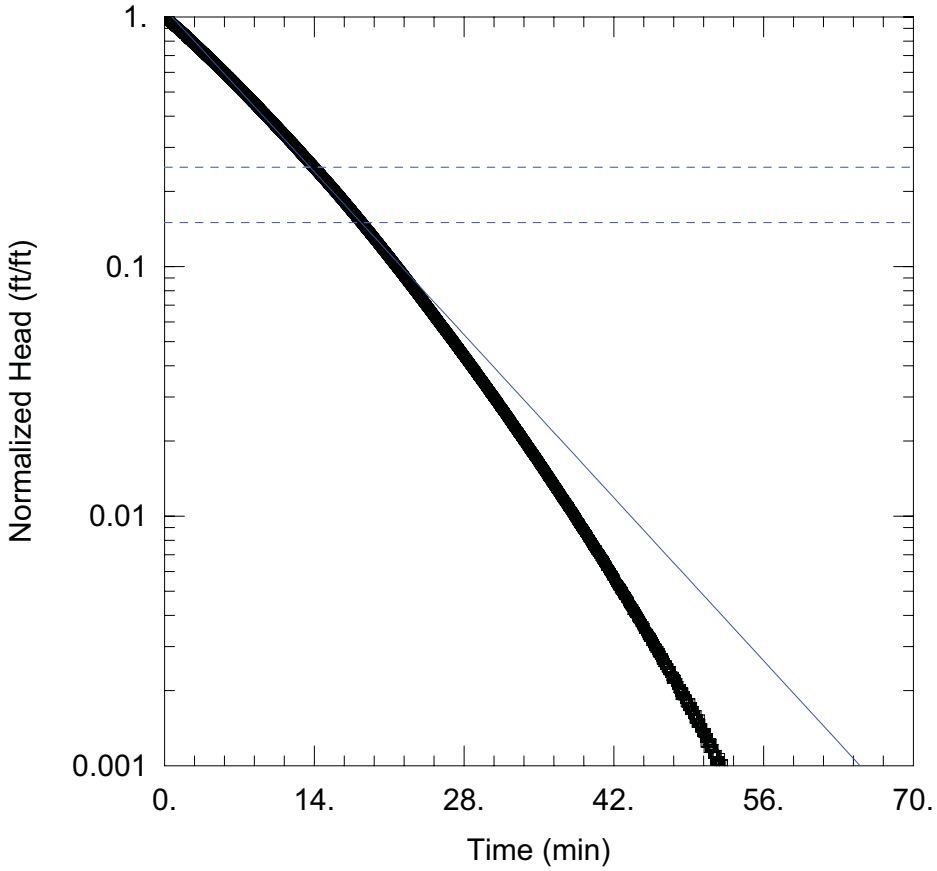

MW-36-53 SLUG TEST

Data Set: J:\...\MW-36-53Jan07.aqt
Date: 04/20/07 Time: 16:45:11

PROJECT INFORMATION

Company: GZA GeoEnvironmental
Client: Indian Point Energy Center
Project: 41.0017869.10
Location: Buchanan, New York
Test Well: MW-36-53
Test Date: 1/4/07

AQUIFER DATA

Saturated Thickness: 300. ft Anisotropy Ratio (Kz/Kr): 0.1

WELL DATA (MW-36-53)

Initial Displacement: 32.45 ft Static Water Column Height: 48.6 ft
Total Well Penetration Depth: 48.6 ft Screen Length: 7. ft
Casing Radius: 0.04167 ft Wellbore Radius: 0.159 ft

SOLUTION

Aquifer Model: Unconfined Solution Method: Hvorslev

K = 0.09468 ft/day y0 = 35.02 ft

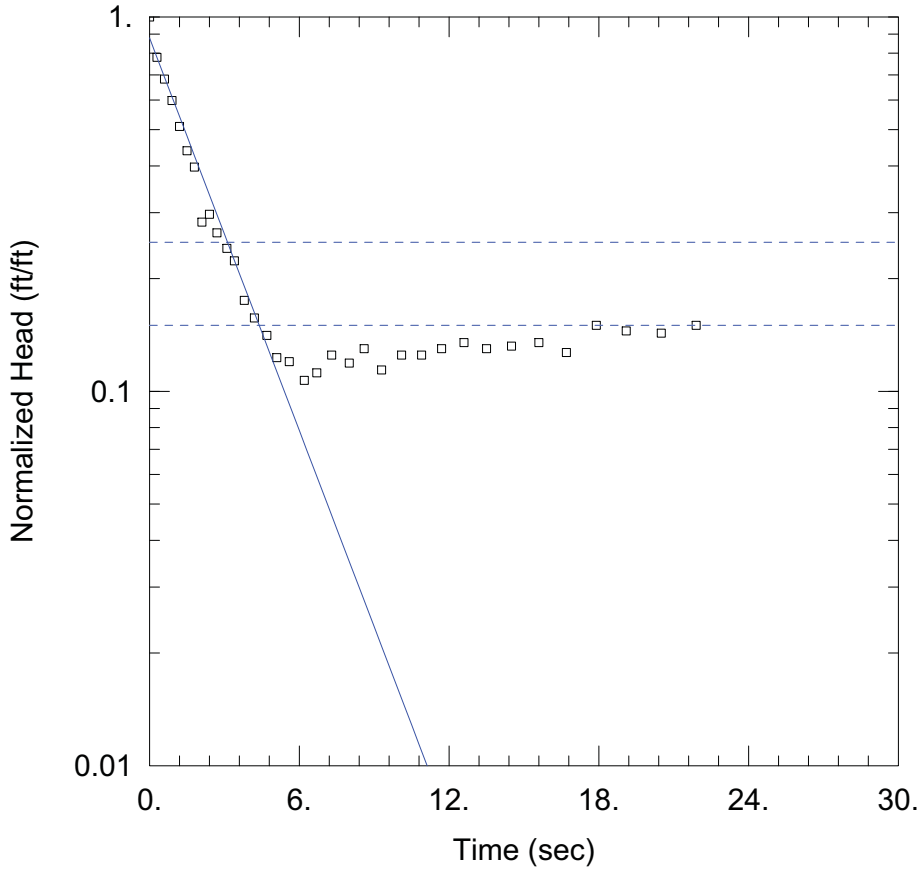

MW-37-32 SLUG TEST (RISING)

Data Set: J:\...\MW-37-32rising.aqt
Date: 04/20/07 Time: 16:49:11

PROJECT INFORMATION

Company: GZA GeoEnvironmental
Client: Indian Point Energy Center
Project: 41.0017869.10
Location: Buchanan, New York
Test Well: MW-37-32
Test Date: 4/4/06

AQUIFER DATA

Saturated Thickness: 300. ft Anisotropy Ratio (Kz/Kr): 0.1

WELL DATA (MW-37-32)

Initial Displacement: 1. ft Static Water Column Height: 22. ft
Total Well Penetration Depth: 22. ft Screen Length: 5.5 ft
Casing Radius: 0.04167 ft Wellbore Radius: 0.159 ft

SOLUTION

Aquifer Model: Unconfined Solution Method: Hvorslev

K = 25.76 ft/day y0 = 0.8789 ft

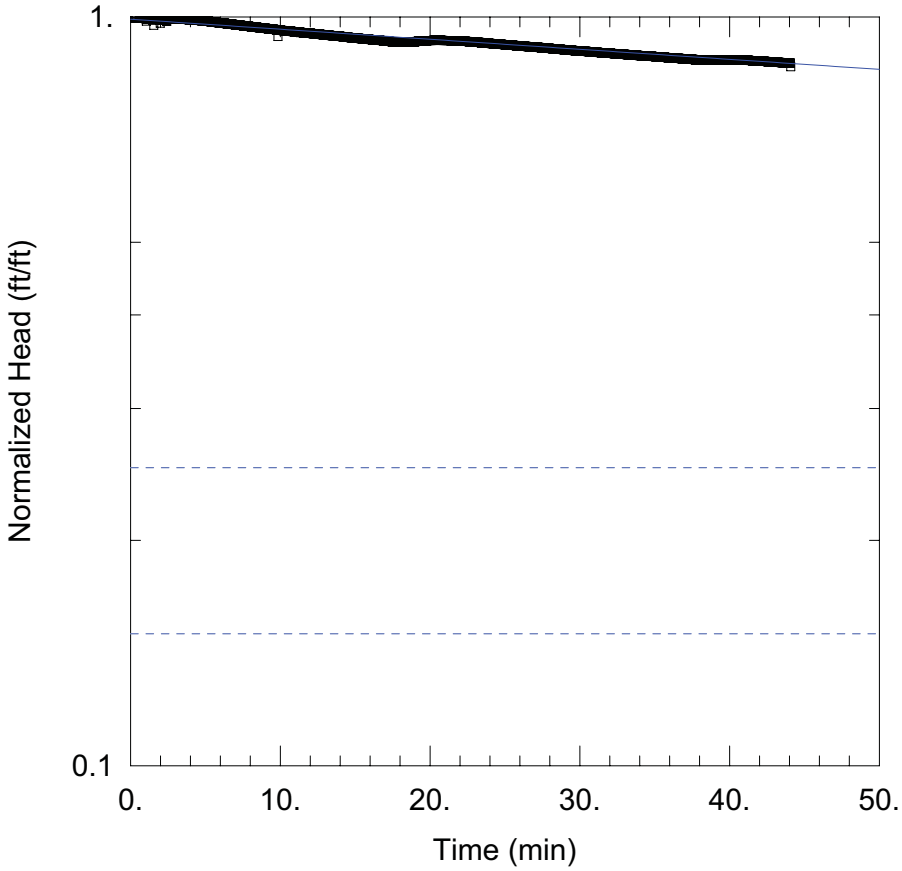

MW-37-40 SLUG TEST

Data Set: J:\...\MW-37-40Jan07.aqt
Date: 04/20/07 Time: 16:49:43

PROJECT INFORMATION

Company: GZA GeoEnvironmental
Client: Indian Point Energy Center
Project: 41.0017869.10
Location: Buchanan, New York
Test Well: MW-37-40
Test Date: 1/4/07

AQUIFER DATA

Saturated Thickness: 300. ft
Anisotropy Ratio (Kz/Kr): 0.1

WELL DATA (MW-37-40)

Initial Displacement: 19.55 ft
Static Water Column Height: 32.2 ft
Total Well Penetration Depth: 32.2 ft
Screen Length: 3.5 ft
Casing Radius: 0.04167 ft
Wellbore Radius: 0.159 ft

SOLUTION

Aquifer Model: Unconfined
Solution Method: Hvorslev

K = 0.004677 ft/day
y0 = 19.41 ft

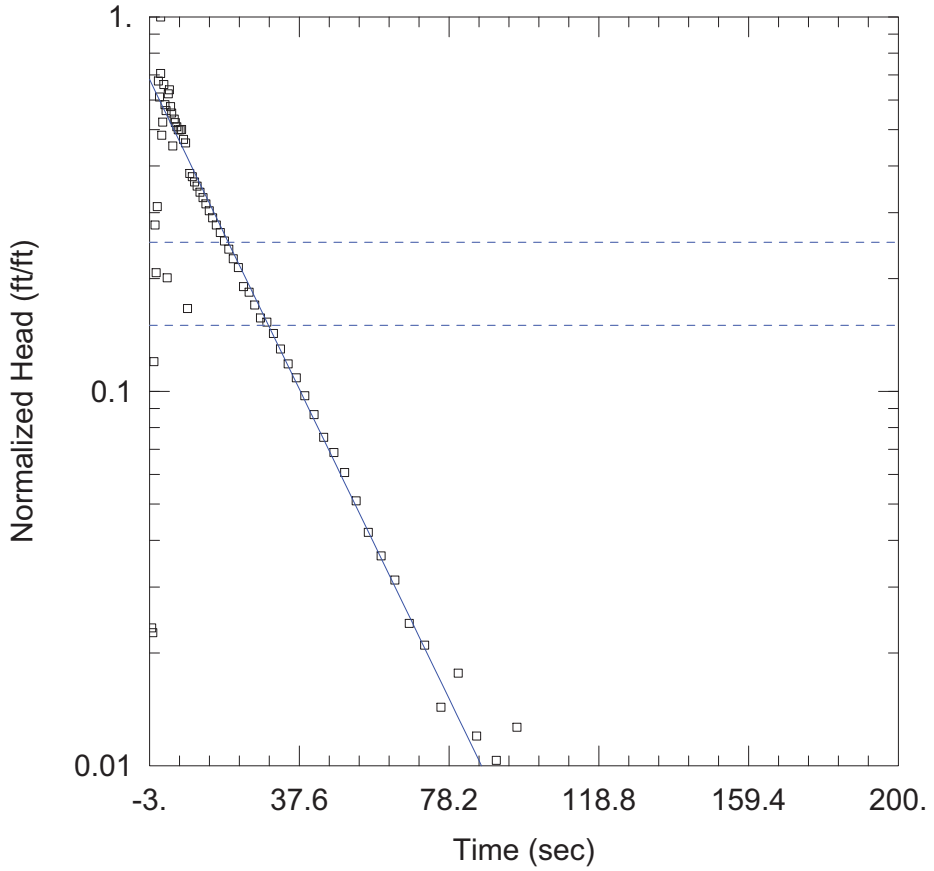

MW-37-57 SLUG TEST (RISING)

Data Set: J:\...\MW-37-57rising.aqt
Date: 09/11/07 Time: 18:47:47

PROJECT INFORMATION

Company: GZA GeoEnvironmental
Client: Indian Point Energy Center
Project: 41.0017869.10
Location: Buchanan, New York
Test Well: MW-37-57
Test Date: 4/4/06

AQUIFER DATA

Saturated Thickness: 300. ft Anisotropy Ratio (Kz/Kr): 0.1

WELL DATA (MW-37-57)

Initial Displacement: 3. ft Static Water Column Height: 48. ft
Total Well Penetration Depth: 48. ft Screen Length: 7. ft
Casing Radius: 0.04167 ft Wellbore Radius: 0.159 ft

SOLUTION

Aquifer Model: Unconfined Solution Method: Hvorslev

K = 2.48 ft/day y0 = 1.774 ft

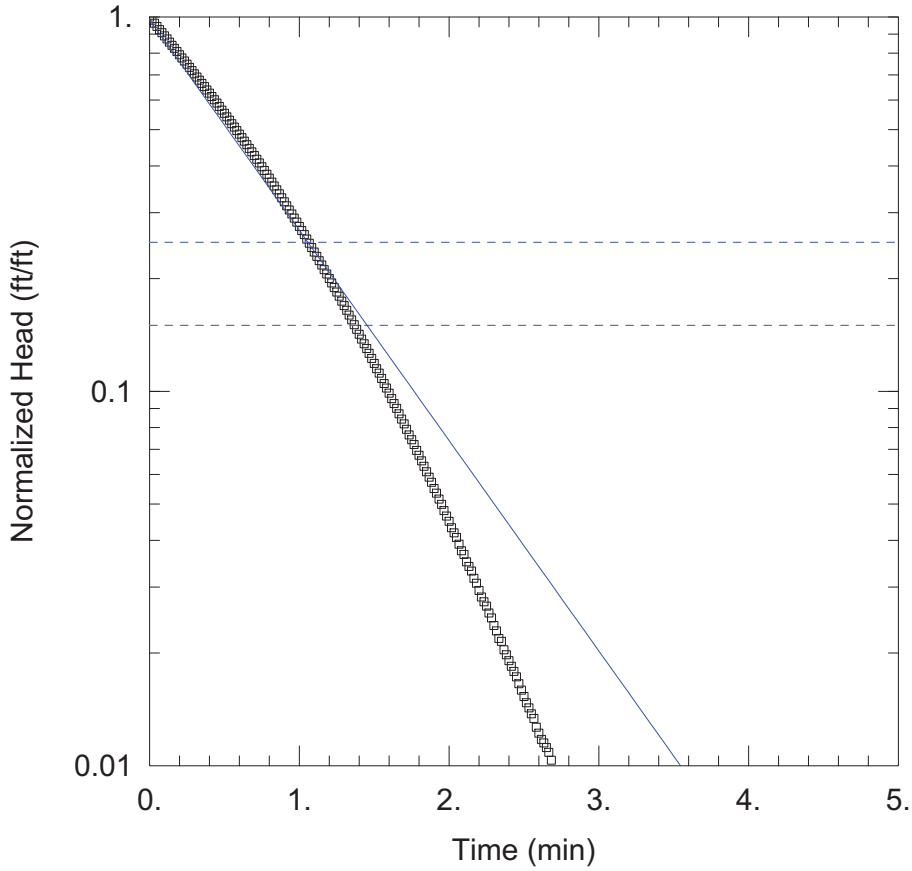

MW-37-57 PNEUMATIC SLUG TEST

Data Set: J:\...\MW-37-57Jan07.aqt
Date: 09/11/07 Time: 18:48:05

PROJECT INFORMATION

Company: GZA GeoEnvironmental
Client: Indian Point Energy Center
Project: 41.0017869.10
Location: Buchanan, New York
Test Well: MW-37-57
Test Date: 1/3/07

AQUIFER DATA

Saturated Thickness: 300. ft
Anisotropy Ratio (Kz/Kr): 0.1

WELL DATA (MW-37-57)

Initial Displacement: 31.03 ft
Total Well Penetration Depth: 48. ft
Casing Radius: 0.04167 ft
Static Water Column Height: 48. ft
Screen Length: 7. ft
Wellbore Radius: 0.159 ft

SOLUTION

Aquifer Model: Unconfined
Solution Method: Hvorslev

K = 1.14 ft/day
y0 = 30.48 ft

Estimate Transmissivity from Specific Capcity Data

$R := 0.167$ Radius of Well (FT.)

$S := 0.25$ Storage Coefficient, Assumed

$t := \frac{50}{1440}$ Pumping Duration (Days.)

$T := 100$ Transmissivity (GPD/FT) *Initial Guess*

$Qp := 7.9$ Pumping Rate (GPM)

$s := 1.36$ Drawdown (FT.)

$\frac{Qp}{s} = 5.809$ Specific Capcity (GPM/FT)

$$aT := \text{root}\left(\frac{Qp}{s} - \frac{T}{264 \cdot \log\left(\frac{0.3 \cdot T \cdot t}{R^2 \cdot S}\right)}, T\right)$$

Groundwater Resource Evaluation
William C. Walton Mc-Graw-hill 1970

$T := aT$

$T = 6069$ Computed Transmissivity (GPD/ Ft)

$Tft := \frac{T}{7.48}$

$Tft = 811$ **Computed Transmissivity (Sq.ft./Day)**

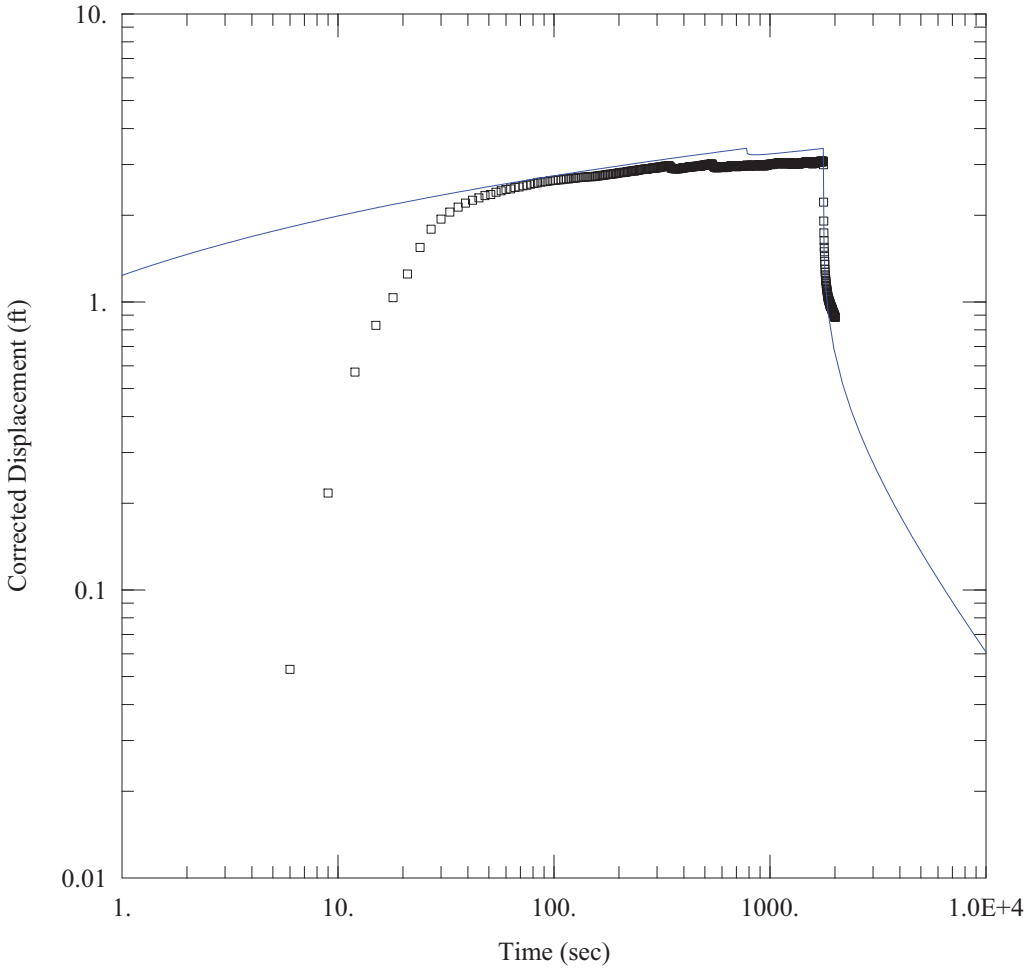

MW-39 T12 PACKERED EXTRACTION

Data Set: J:\...\MW-39 t12 theis.aqt
Date: 09/10/07 Time: 16:48:49

PROJECT INFORMATION

Company: GZA GeoEnvironmental
Client: Indian Point Energy Center
Project: 41.0017869.10
Location: Buchanan, NY
Test Well: MW-39
Test Date: 4/19/06

WELL DATA

Pumping Wells

Well Name	X (ft)	Y (ft)
MW-39	0	0

Observation Wells

Well Name	X (ft)	Y (ft)
▫ MW-39	0	0

SOLUTION

Aquifer Model: Unconfined
Solution Method: Theis

T = 121.6 ft^2/day
S = 0.00291
Kz/Kr = 1.
b = 300. ft

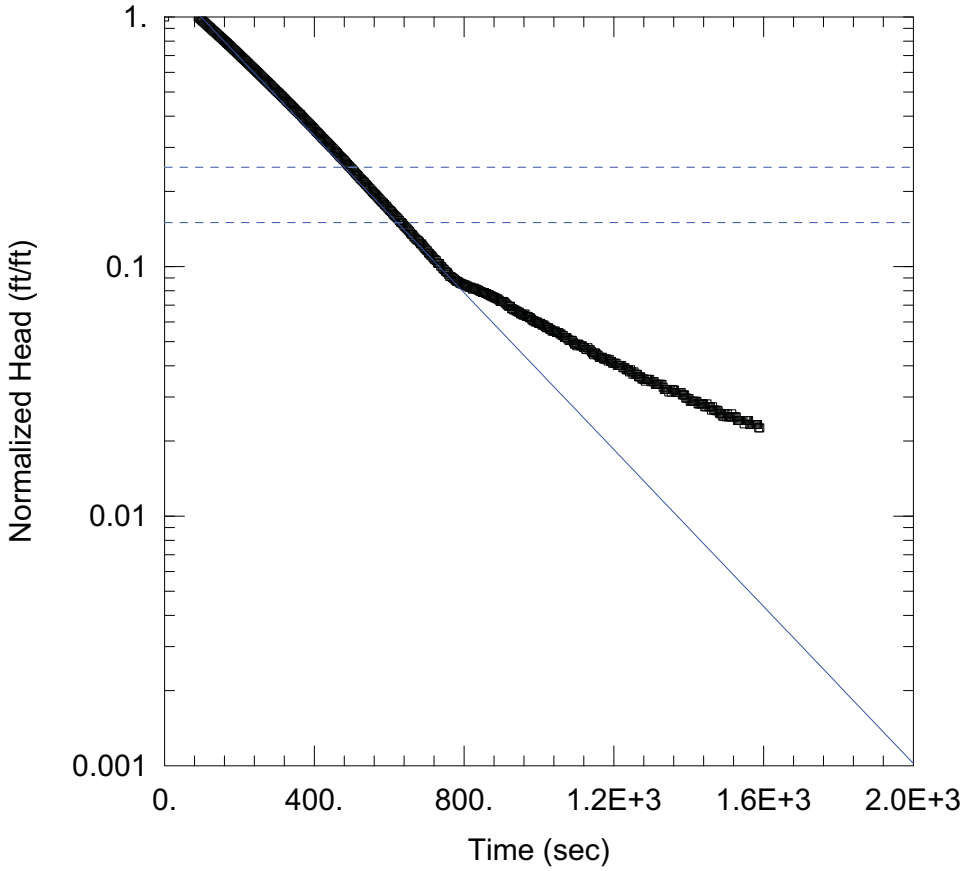

MW-39 TEST 11

Data Set: J:\...\MW-39 t11.aqt
Date: 04/19/07 Time: 14:35:02

PROJECT INFORMATION

Company: GZA GeoEnvironmental
Client: Indian Point Energy Center
Project: 41.0017869.10
Location: Buchanan, New York
Test Well: MW-39 (69.5-79.5)
Test Date: 04/19/06

AQUIFER DATA

Saturated Thickness: 300. ft Anisotropy Ratio (Kz/Kr): 0.1

WELL DATA (MW-39 T11)

Initial Displacement: 7. ft Static Water Column Height: 21.71 ft
Total Well Penetration Depth: 21.71 ft Screen Length: 10. ft
Casing Radius: 0.08333 ft Wellbore Radius: 0.159 ft

SOLUTION

Aquifer Model: Unconfined Solution Method: Hvorslev

K = 0.5746 ft/day y0 = 9.952 ft

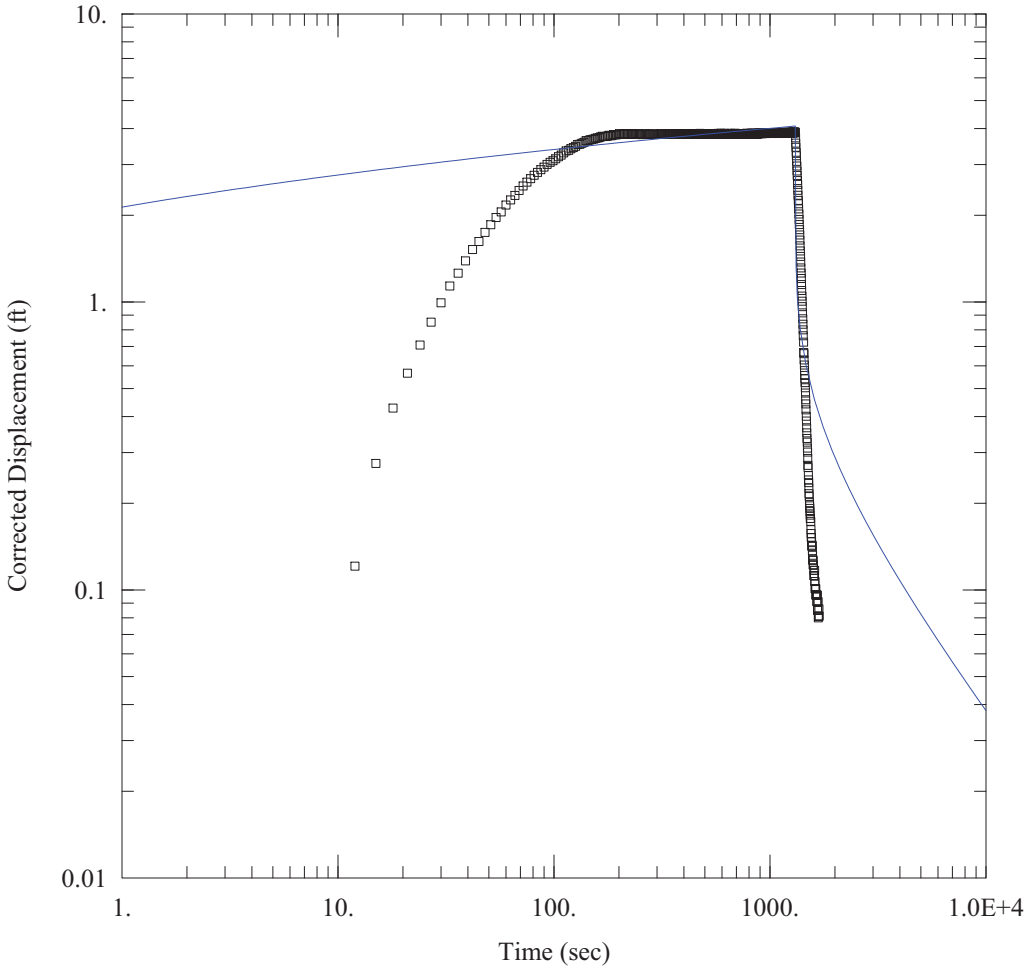

MW-39 T10 PACKERED EXTRACTION

Data Set: J:\...\MW-39 t10 theis.aqt
Date: 09/10/07 Time: 16:49:06

PROJECT INFORMATION

Company: GZA GeoEnvironmental
Client: Indian Point Energy Center
Project: 41.0017869.10
Location: Buchanan, NY
Test Well: MW-39
Test Date: 4/19/06

WELL DATA

Pumping Wells

Well Name	X (ft)	Y (ft)
MW-39	0	0

Observation Wells

Well Name	X (ft)	Y (ft)
▫ MW-39	0	0

SOLUTION

Aquifer Model: Unconfined
Solution Method: Theis

T = 24.88 ft^2/day
S = 9.701E-6
Kz/Kr = 1.
b = 300. ft

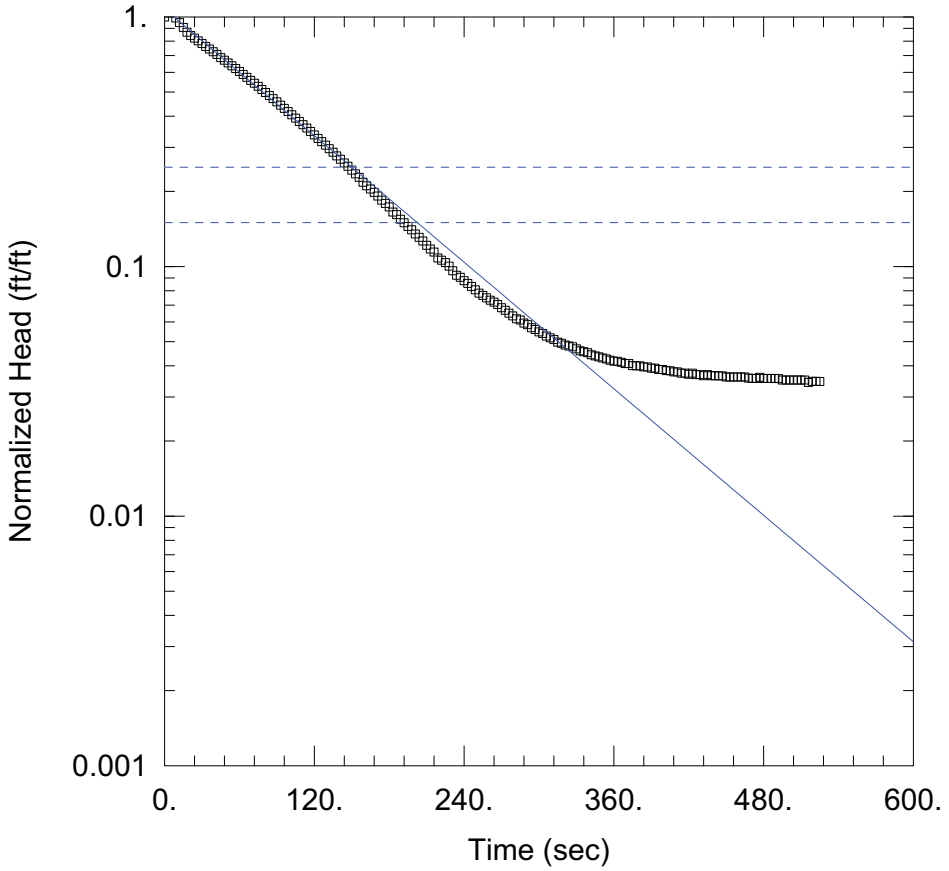

MW-39 TEST 10

Data Set: J:\...\MW-39 t10.aqt
Date: 04/19/07 Time: 14:33:13

PROJECT INFORMATION

Company: GZA GeoEnvironmental
Client: Indian Point Energy Center
Project: 41.0017869.10
Location: Buchanan, New York
Test Well: MW-39 (79.5-89.5)
Test Date: 04/19/06

AQUIFER DATA

Saturated Thickness: 300. ft Anisotropy Ratio (Kz/Kr): 0.1

WELL DATA (MW-39 T10)

Initial Displacement: 13. ft Static Water Column Height: 31.71 ft
Total Well Penetration Depth: 31.71 ft Screen Length: 10. ft
Casing Radius: 0.08333 ft Wellbore Radius: 0.159 ft

SOLUTION

Aquifer Model: Unconfined Solution Method: Hvorslev

K = 1.545 ft/day y0 = 13.98 ft

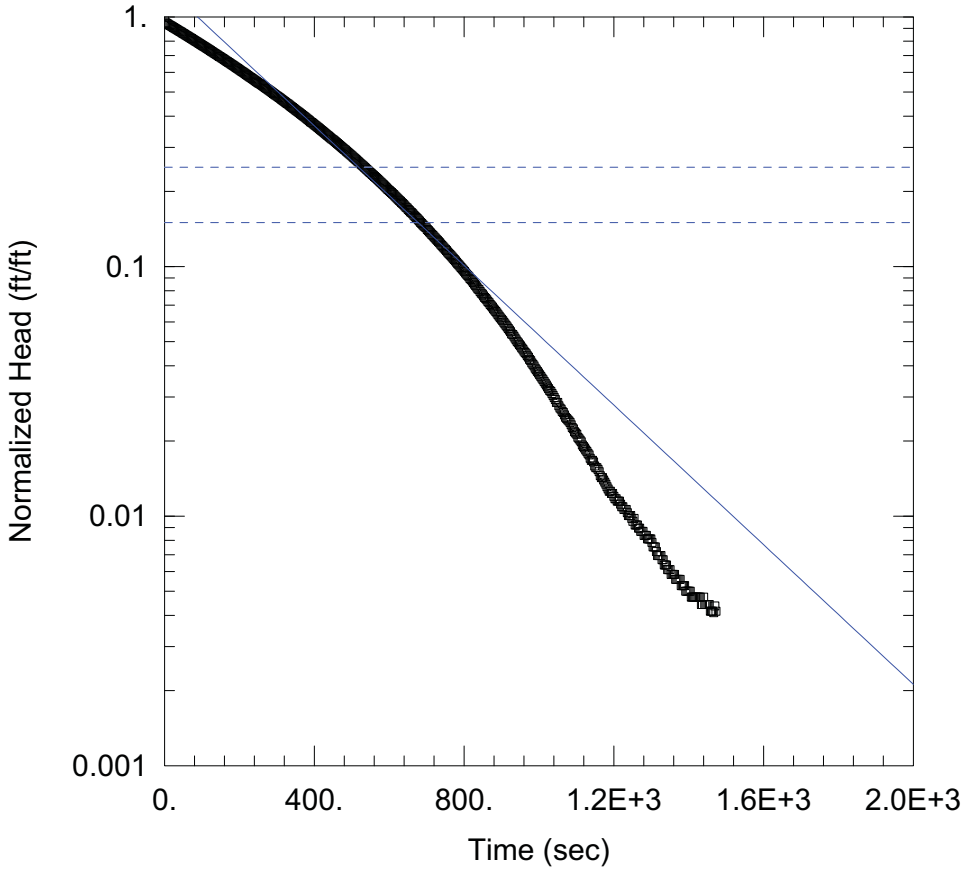

MW-39 TEST 9

Data Set: J:\...\MW-39 t9.aqt
Date: 04/19/07 Time: 14:31:11

PROJECT INFORMATION

Company: GZA GeoEnvironmental
Client: Indian Point Energy Center
Project: 41.0017869.10
Location: Buchanan, New York
Test Well: MW-39 (89.3-99.3)
Test Date: 04/13/06

AQUIFER DATA

Saturated Thickness: 300. ft Anisotropy Ratio (Kz/Kr): 0.1

WELL DATA (MW-39 Test 9)

Initial Displacement: 19. ft Static Water Column Height: 46.8 ft
Total Well Penetration Depth: 46.8 ft Screen Length: 10. ft
Casing Radius: 0.08333 ft Wellbore Radius: 0.159 ft

SOLUTION

Aquifer Model: Unconfined Solution Method: Hvorslev

K = 0.5113 ft/day y0 = 25.24 ft

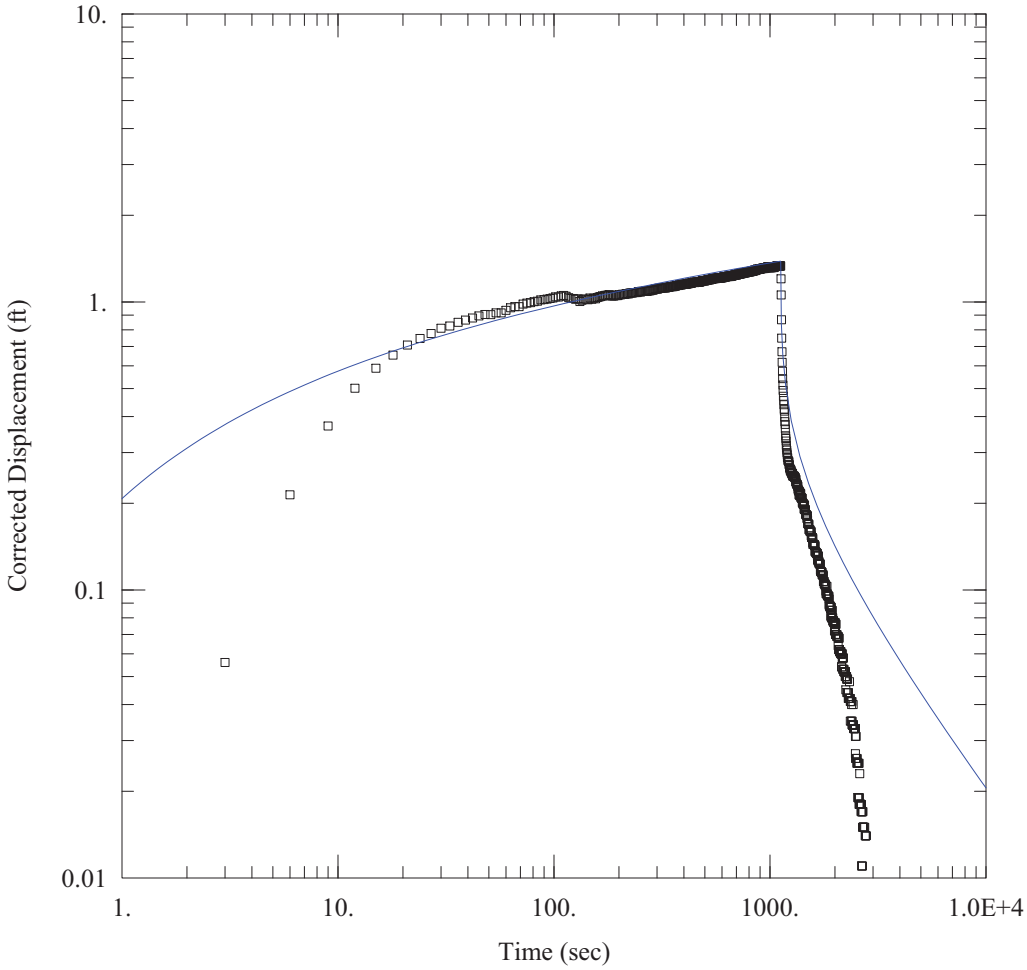

MW-39 T8 PACKERED EXTRACTION

Data Set: J:\...\MW-39 t8 theis.aqt
Date: 09/10/07 Time: 16:49:25

PROJECT INFORMATION

Company: GZA GeoEnvironmental
Client: Indian Point Energy Center
Project: 41.0017869.10
Location: Buchanan, NY
Test Well: MW-39
Test Date: 4/11/06

WELL DATA

Pumping Wells

Well Name	X (ft)	Y (ft)
MW-39	0	0

Observation Wells

Well Name	X (ft)	Y (ft)
▫ MW-39	0	0

SOLUTION

Aquifer Model: Unconfined
Solution Method: Theis

T = 127.9 ft^2/day
S = 0.04799
Kz/Kr = 1.
b = 300. ft

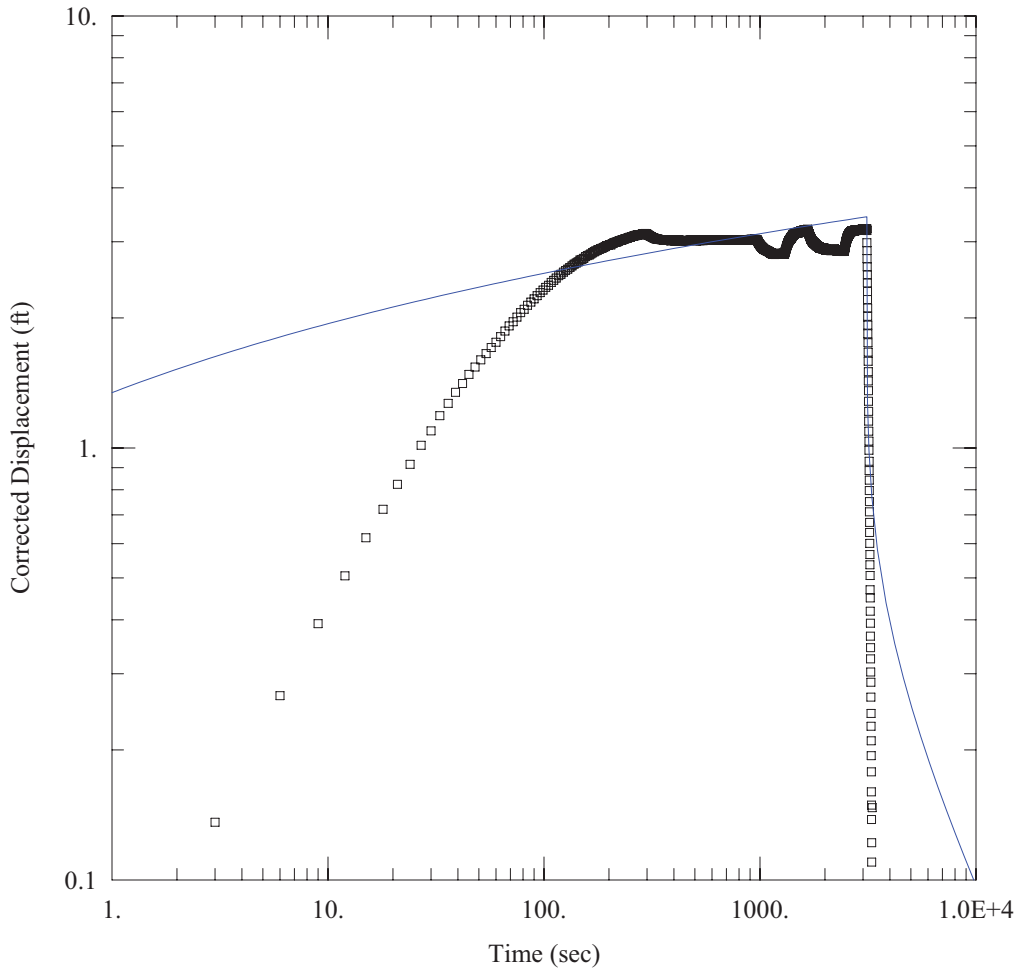

MW-39 T7 PACKERED EXTRACTION

Data Set: J:\...\MW-39 t7 theis.aqt
Date: 09/10/07 Time: 16:49:43

PROJECT INFORMATION

Company: GZA GeoEnvironmental
Client: Indian Point Energy Center
Project: 41.0017869.10
Location: Buchanan, NY
Test Well: MW-39
Test Date: 4/10/06

WELL DATA

Pumping Wells

Well Name	X (ft)	Y (ft)
MW-39	0	0

Observation Wells

Well Name	X (ft)	Y (ft)
▫ MW-39	0	0

SOLUTION

Aquifer Model: Unconfined
Solution Method: Theis

T = 22.74 ft^2/day
S = 0.0001326
Kz/Kr = 1.
b = 300. ft

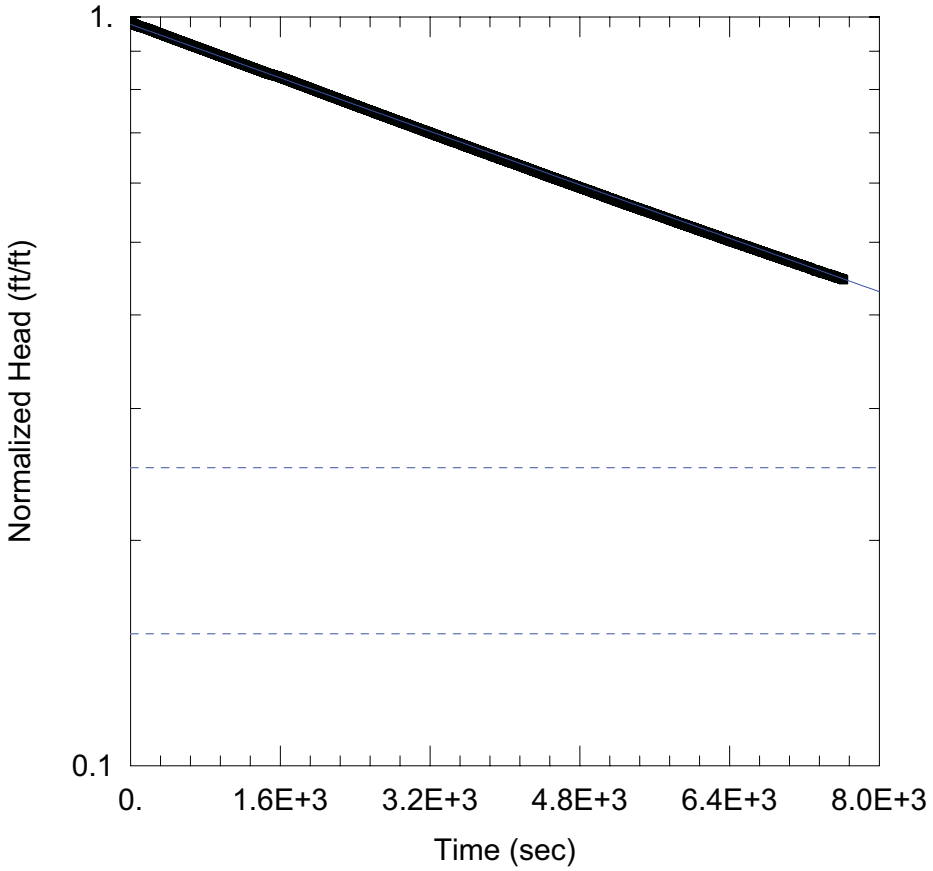

MW-39 TEST 6

Data Set: J:\...\MW-39 t6.aqt
Date: 04/19/07 Time: 14:29:09

PROJECT INFORMATION

Company: GZA GeoEnvironmental
Client: Indian Point Energy Center
Project: 41.0017869.10
Location: Buchanan, New York
Test Well: MW-39 (129.0-139.0)
Test Date: 04/10/06

AQUIFER DATA

Saturated Thickness: 300. ft Anisotropy Ratio (Kz/Kr): 0.1

WELL DATA (MW-39 Test 6)

Initial Displacement: 13.5 ft Static Water Column Height: 81.88 ft
Total Well Penetration Depth: 81.88 ft Screen Length: 10. ft
Casing Radius: 0.08333 ft Wellbore Radius: 0.159 ft

SOLUTION

Aquifer Model: Unconfined Solution Method: Hvorslev

K = 0.01631 ft/day y0 = 13.19 ft

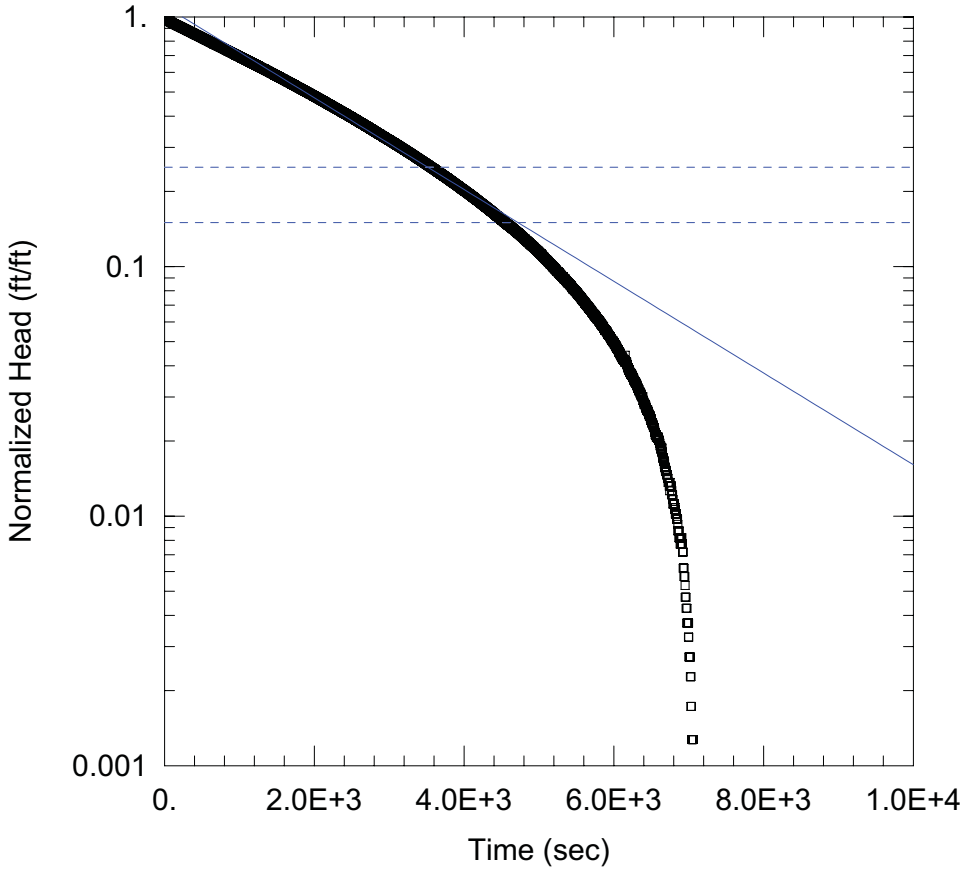

MW-39 TEST 5

Data Set: J:\...\MW-39 t5.aqt
Date: 04/19/07 Time: 14:28:40

PROJECT INFORMATION

Company: GZA GeoEnvironmental
Client: Indian Point Energy Center
Project: 41.0017869.10
Location: Buchanan, New York
Test Well: MW-39 (139.2-149.2)
Test Date: 04/6/06

AQUIFER DATA

Saturated Thickness: 300. ft Anisotropy Ratio (Kz/Kr): 0.1

WELL DATA (MW-39 Test 5)

Initial Displacement: 11. ft Static Water Column Height: 92.08 ft
Total Well Penetration Depth: 92.08 ft Screen Length: 10. ft
Casing Radius: 0.08333 ft Wellbore Radius: 0.159 ft

SOLUTION

Aquifer Model: Unconfined Solution Method: Hvorslev

K = 0.06719 ft/day y0 = 12.16 ft

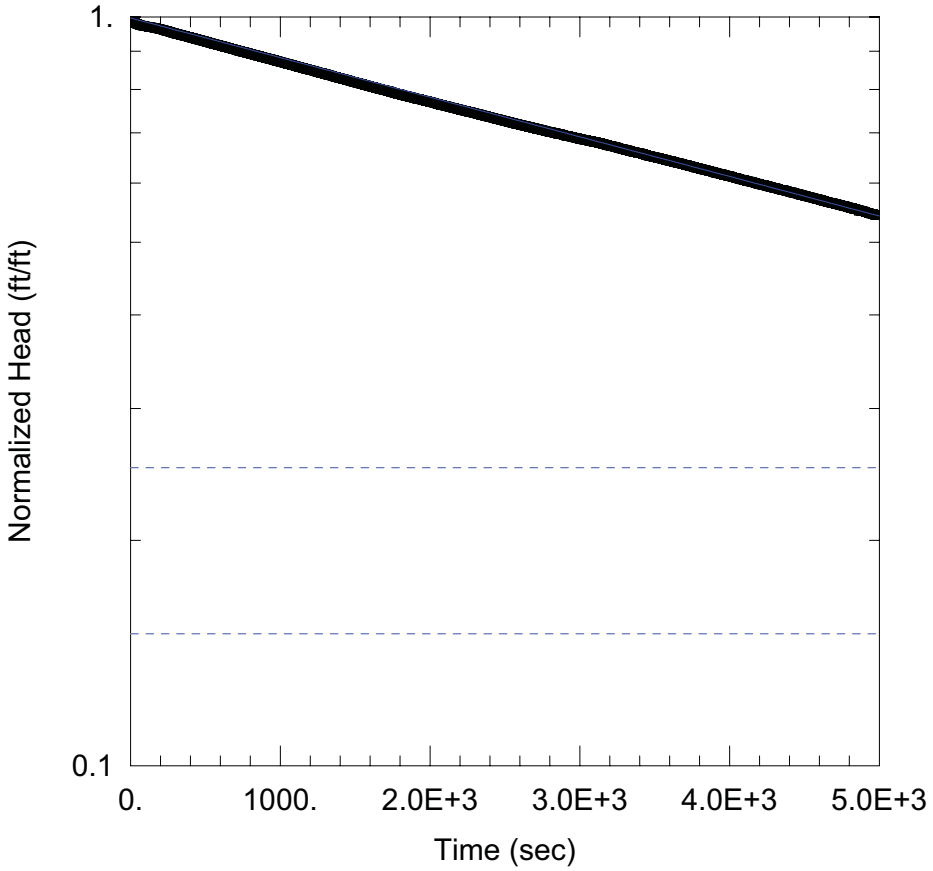

MW-39 TEST 4

Data Set: J:\...\MW-39 t4.aqt
Date: 04/19/07 Time: 14:28:20

PROJECT INFORMATION

Company: GZA GeoEnvironmental
Client: Indian Point Energy Center
Project: 41.0017869.10
Location: Buchanan, New York
Test Well: MW-39 (152.2-162.2)
Test Date: 04/6/06

AQUIFER DATA

Saturated Thickness: 300. ft Anisotropy Ratio (Kz/Kr): 0.1

WELL DATA (MW-39 Test 4)

Initial Displacement: 8.5 ft Static Water Column Height: 105.1 ft
Total Well Penetration Depth: 105.1 ft Screen Length: 10. ft
Casing Radius: 0.08333 ft Wellbore Radius: 0.159 ft

SOLUTION

Aquifer Model: Unconfined Solution Method: Hvorslev

K = 0.01934 ft/day y0 = 8.472 ft

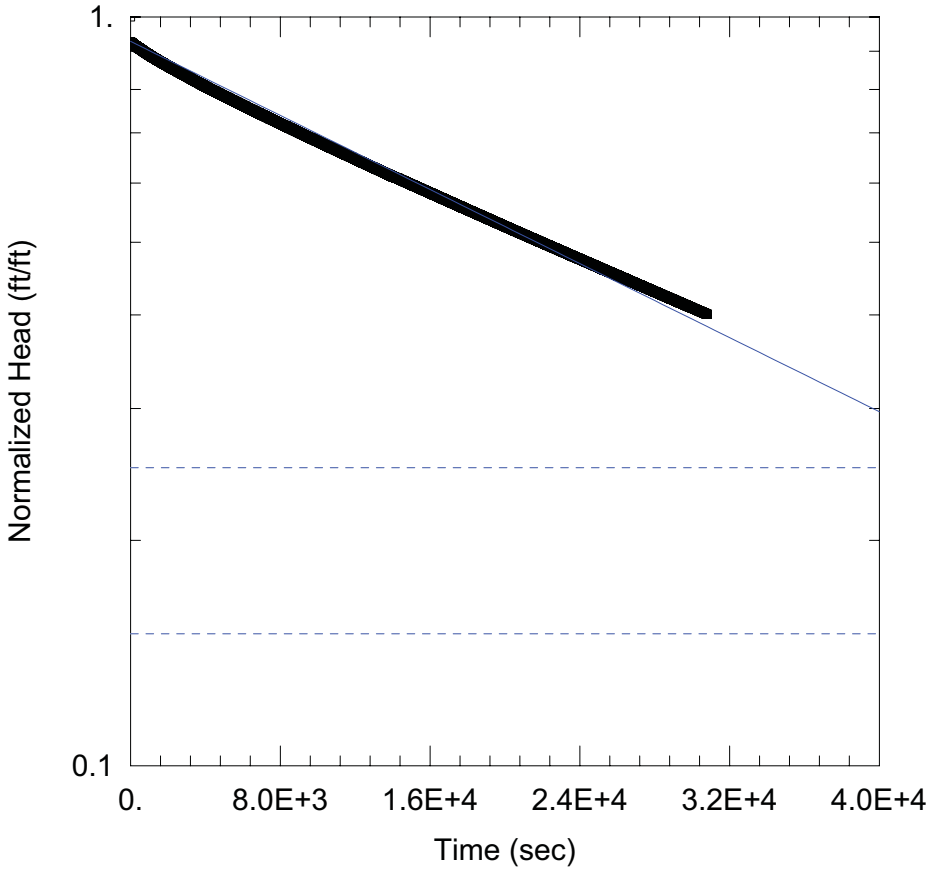

MW-39 TEST 3

Data Set: J:\...\MW-39 T3.aqt
Date: 04/19/07 Time: 14:27:14

PROJECT INFORMATION

Company: GZA GeoEnvironmental
Client: Indian Point Energy Center
Project: 41.0017869.10
Location: Buchanan, New York
Test Well: MW-39 (165.0-175.0)
Test Date: 04/6/06

AQUIFER DATA

Saturated Thickness: 300. ft Anisotropy Ratio (Kz/Kr): 0.1

WELL DATA (MW-39 Test 3)

Initial Displacement: 23. ft Static Water Column Height: 117.9 ft
Total Well Penetration Depth: 117.9 ft Screen Length: 10. ft
Casing Radius: 0.08333 ft Wellbore Radius: 0.159 ft

SOLUTION

Aquifer Model: Unconfined Solution Method: Hvorslev

K = 0.00452 ft/day y0 = 21.34 ft

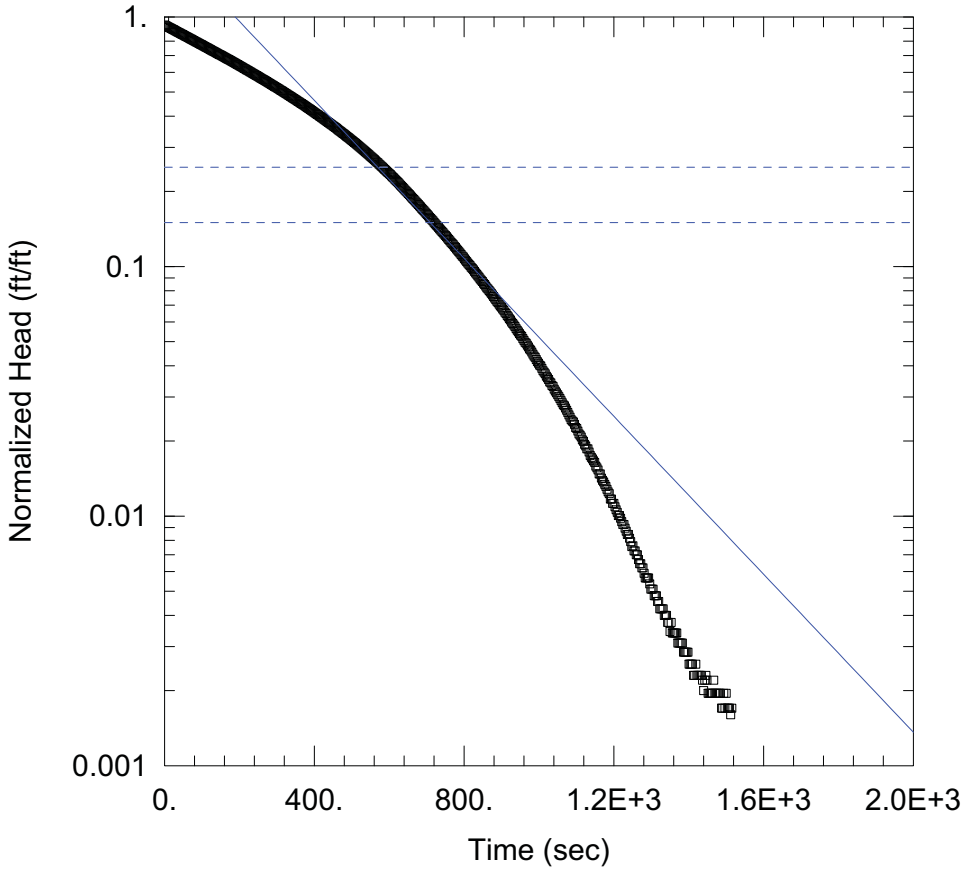

MW-39 TEST 2

Data Set: J:\...\MW-39 T2.aqt
Date: 04/19/07 Time: 14:26:05

PROJECT INFORMATION

Company: GZA GeoEnvironmental
Client: Indian Point Energy Center
Project: 41.0017869.10
Location: Buchanan, New York
Test Well: MW-39 (175.0-185.0)
Test Date: 04/5/06

AQUIFER DATA

Saturated Thickness: 300. ft Anisotropy Ratio (Kz/Kr): 0.1

WELL DATA (MW-39 Test 2)

Initial Displacement: 20. ft Static Water Column Height: 127.9 ft
Total Well Penetration Depth: 127.9 ft Screen Length: 10. ft
Casing Radius: 0.08333 ft Wellbore Radius: 0.159 ft

SOLUTION

Aquifer Model: Unconfined Solution Method: Hvorslev

K = 0.5784 ft/day y0 = 39.77 ft

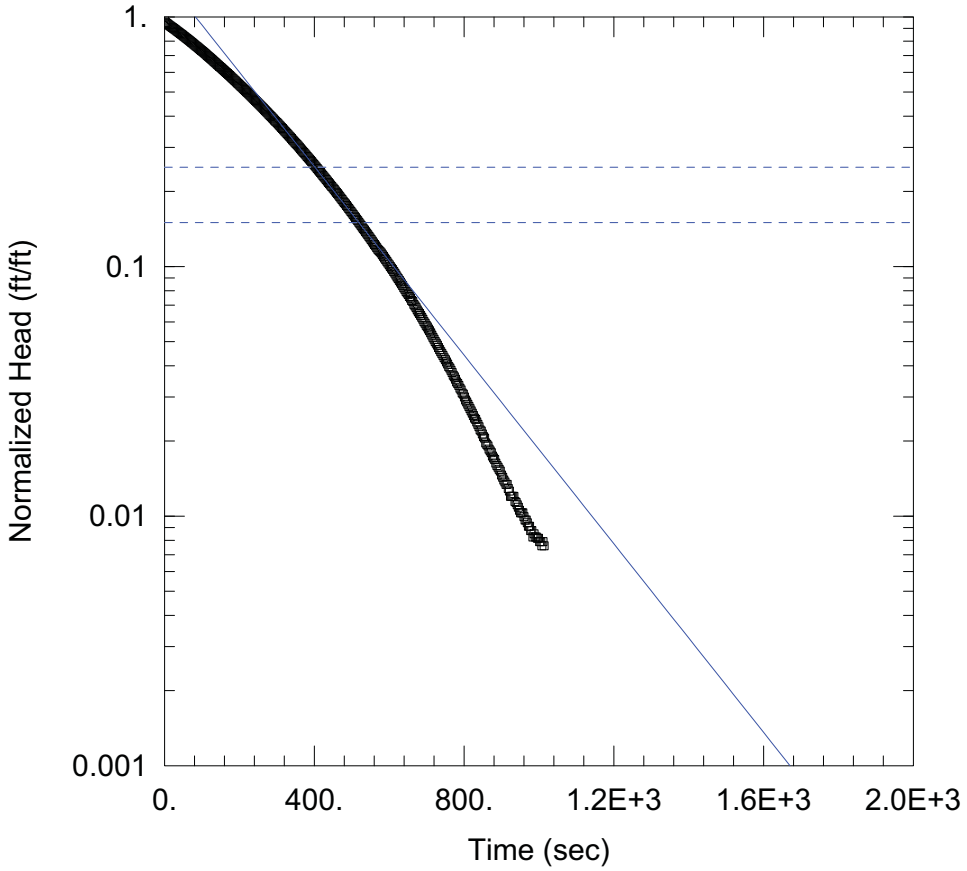

MW-39 TEST 1

Data Set: J:\...\MW-39 t1.aqt
Date: 04/19/07 Time: 14:25:30

PROJECT INFORMATION

Company: GZA GeoEnvironmental
Client: Indian Point Energy Center
Project: 41.0017869.10
Location: Buchanan, New York
Test Well: MW-39 (183.2-193.2)
Test Date: 04/5/06

AQUIFER DATA

Saturated Thickness: 300. ft Anisotropy Ratio (Kz/Kr): 0.1

WELL DATA (MW-39 Test 1)

Initial Displacement: 20. ft Static Water Column Height: 136.1 ft
Total Well Penetration Depth: 136.1 ft Screen Length: 10. ft
Casing Radius: 0.08333 ft Wellbore Radius: 0.159 ft

SOLUTION

Aquifer Model: Unconfined Solution Method: Hvorslev

K = 0.6907 ft/day y0 = 28.68 ft

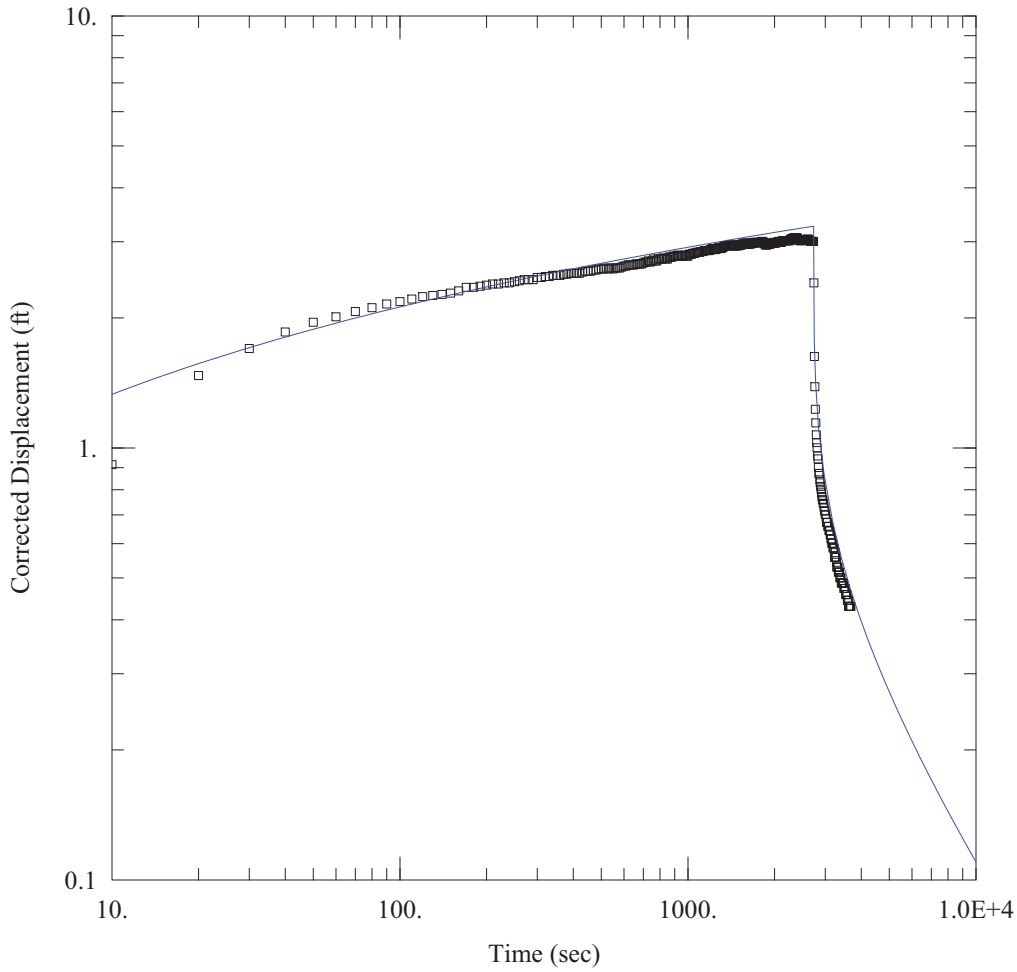

MW-40 T12 PACKERED EXTRACTION

Data Set: J:\...\MW-40 t12 theis.aqt
Date: 09/10/07 Time: 16:53:28

PROJECT INFORMATION

Company: GZA GeoEnvironmental
Client: Indian Point Energy Center
Project: 41.0017869.10
Location: Buchanan, NY
Test Well: MW-40
Test Date: 5/16/06

WELL DATA

Pumping Wells

Well Name	X (ft)	Y (ft)
MW-40	0	0

Observation Wells

Well Name	X (ft)	Y (ft)
▫ MW-40	0	0

SOLUTION

Aquifer Model: Unconfined
Solution Method: Theis

T = 74.05 ft^2/day
S = 0.01628
Kz/Kr = 1.
b = 300. ft

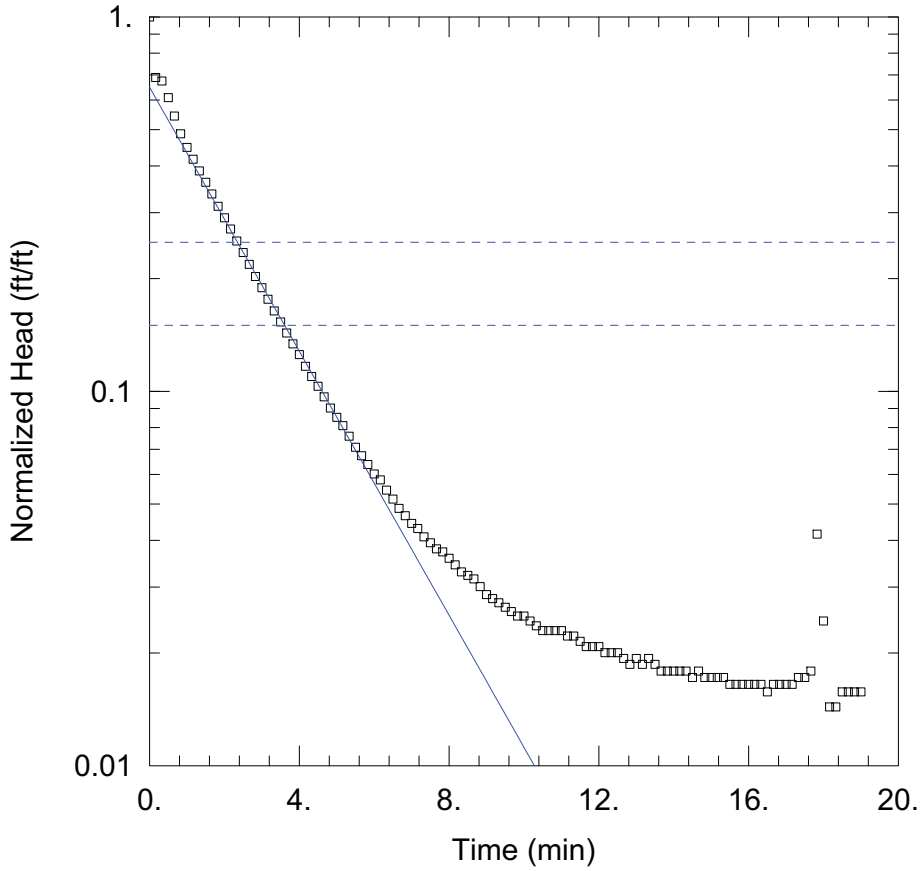

MW-40 TEST 11

Data Set: J:\...\MW-40 t11.aqt
Date: 04/19/07 Time: 15:54:26

PROJECT INFORMATION

Company: GZA GeoEnvironmental
Client: Indian Point Energy Center
Project: 41.0017869.10
Location: Buchanan, New York
Test Well: MW-40 (28.0-38.0)
Test Date: 5/16/06

AQUIFER DATA

Saturated Thickness: 300. ft Anisotropy Ratio (Kz/Kr): 0.1

WELL DATA (MW-40 T11)

Initial Displacement: 20. ft Static Water Column Height: 21.74 ft
Total Well Penetration Depth: 21.74 ft Screen Length: 10. ft
Casing Radius: 0.08333 ft Wellbore Radius: 0.159 ft

SOLUTION

Aquifer Model: Unconfined Solution Method: Hvorslev

K = 1.074 ft/day y0 = 12.98 ft

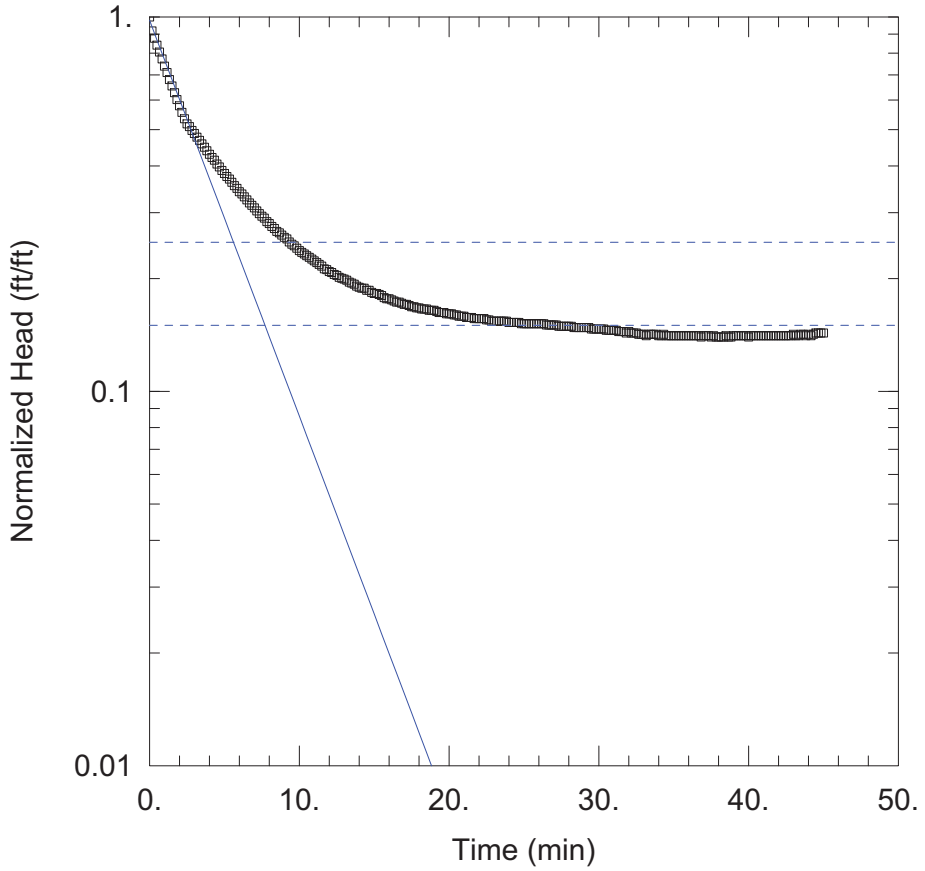

MW-40 TEST 10

Data Set: J:\...\MW-40 t10.aqt
Date: 09/10/07 Time: 16:56:15

PROJECT INFORMATION

Company: GZA GeoEnvironmental
Client: Indian Point Energy Center
Project: 41.0017869.10
Location: Buchanan, New York
Test Well: MW-40 (34.0-44.0)
Test Date: 5/15/06

AQUIFER DATA

Saturated Thickness: 300. ft Anisotropy Ratio (Kz/Kr): 0.1

WELL DATA (MW-40 T10)

Initial Displacement: 12. ft Static Water Column Height: 27.74 ft
Total Well Penetration Depth: 27.74 ft Screen Length: 10. ft
Casing Radius: 0.08333 ft Wellbore Radius: 0.159 ft

SOLUTION

Aquifer Model: Unconfined Solution Method: Hvorslev

K = 0.6442 ft/day y0 = 11.76 ft

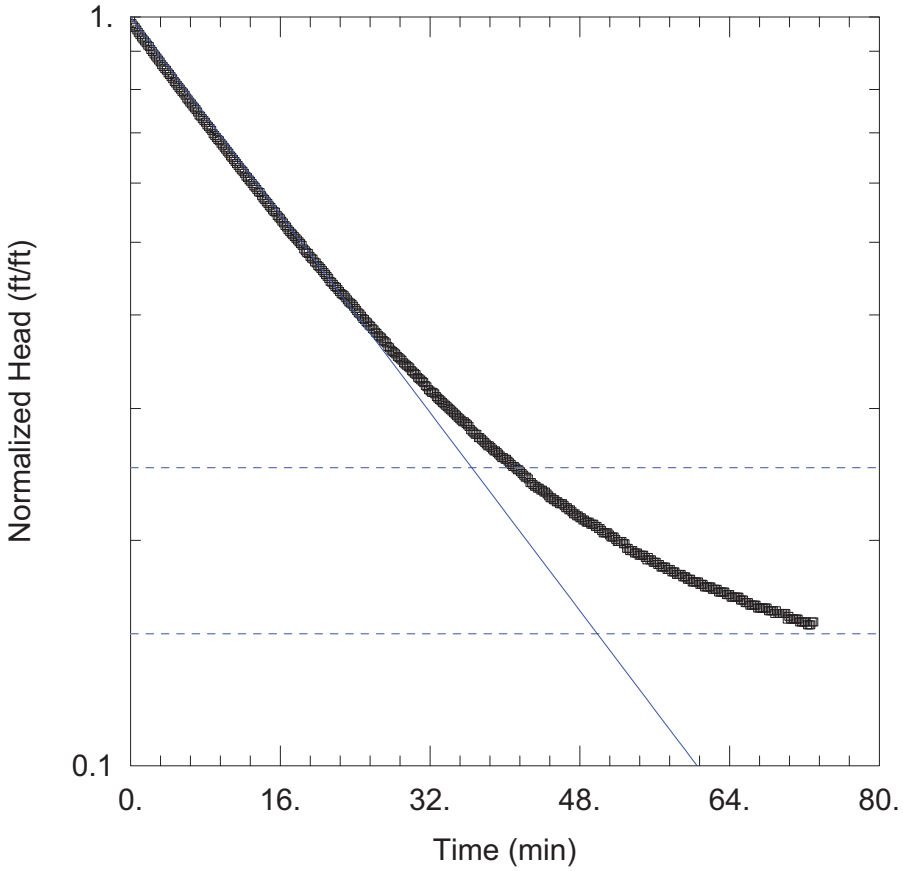

MW-40 TEST 9

Data Set: J:\...\MW-40 t9.aqt
Date: 09/10/07 Time: 16:56:02

PROJECT INFORMATION

Company: GZA GeoEnvironmental
Client: Indian Point Energy Center
Project: 41.0017869.10
Location: Buchanan, New York
Test Well: MW-40 (44.0-54.0)
Test Date: 5/15/06

AQUIFER DATA

Saturated Thickness: 300. ft Anisotropy Ratio (Kz/Kr): 0.1

WELL DATA (MW-40 Test 9)

Initial Displacement: 10.5 ft Static Water Column Height: 37.85 ft
Total Well Penetration Depth: 37.85 ft Screen Length: 10. ft
Casing Radius: 0.08333 ft Wellbore Radius: 0.159 ft

SOLUTION

Aquifer Model: Unconfined Solution Method: Hvorslev

K = 0.1007 ft/day y0 = 10.52 ft

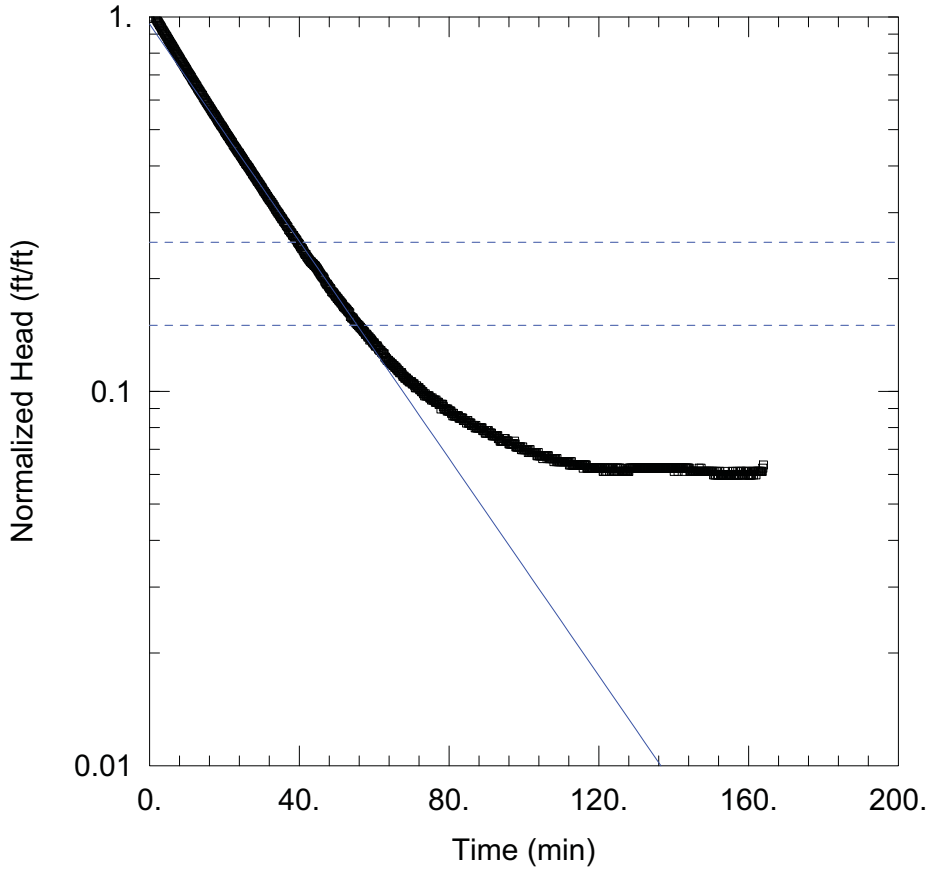

MW-40 TEST 8

Data Set: J:\...\MW-40 t8.aqt
Date: 04/19/07 Time: 15:53:18

PROJECT INFORMATION

Company: GZA GeoEnvironmental
Client: Indian Point Energy Center
Project: 41.0017869.10
Location: Buchanan, New York
Test Well: MW-40 (52.0-62.0)
Test Date: 5/15/06

AQUIFER DATA

Saturated Thickness: 300. ft Anisotropy Ratio (Kz/Kr): 0.1

WELL DATA (MW-40 Test 8)

Initial Displacement: 11.5 ft Static Water Column Height: 45.85 ft
Total Well Penetration Depth: 45.85 ft Screen Length: 10. ft
Casing Radius: 0.08333 ft Wellbore Radius: 0.159 ft

SOLUTION

Aquifer Model: Unconfined Solution Method: Hvorslev

K = 0.08836 ft/day y0 = 11. ft

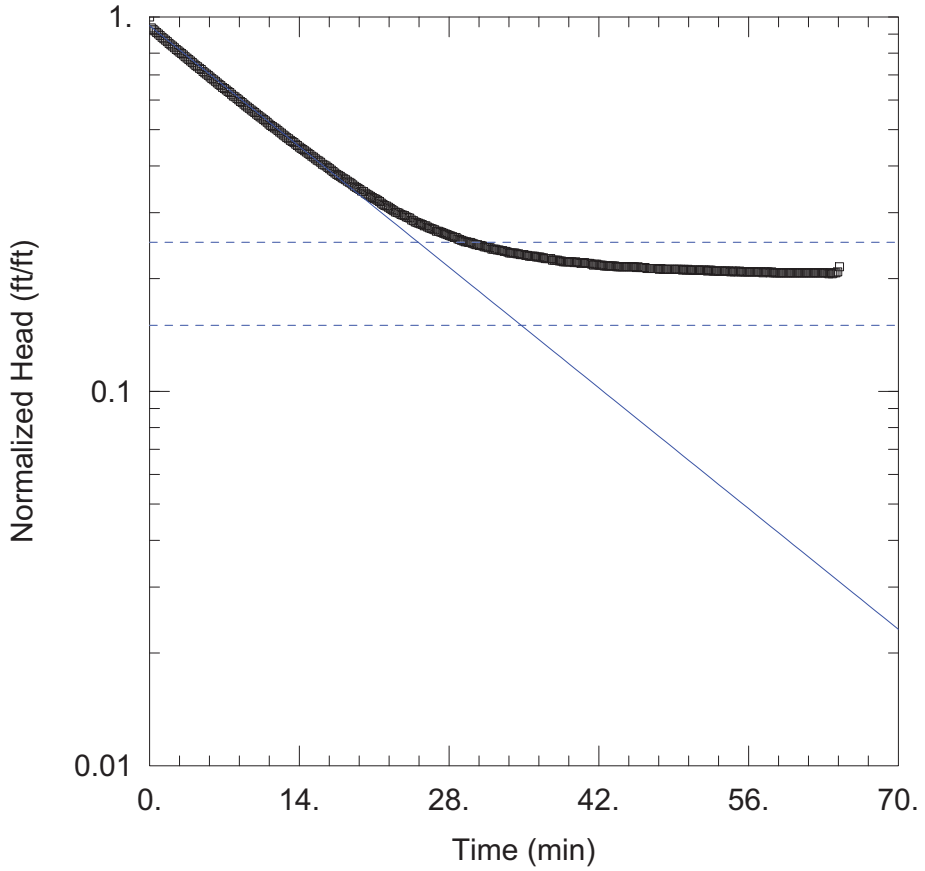

MW-40 TEST7

Data Set: J:\...\MW-40 t7.aqt
Date: 09/10/07 Time: 16:55:46

PROJECT INFORMATION

Company: GZA GeoEnvironmental
Client: Indian Point Energy Center
Project: 41.0017869.10
Location: Buchanan, New York
Test Well: MW-40 (62.5-72.5)
Test Date: 5/15/06

AQUIFER DATA

Saturated Thickness: 300. ft Anisotropy Ratio (Kz/Kr): 0.1

WELL DATA (MW-40 Test 1)

Initial Displacement: 12.8 ft Static Water Column Height: 56.45 ft
Total Well Penetration Depth: 56.45 ft Screen Length: 10. ft
Casing Radius: 0.08333 ft Wellbore Radius: 0.159 ft

SOLUTION

Aquifer Model: Unconfined Solution Method: Hvorslev

K = 0.1403 ft/day y0 = 12.13 ft

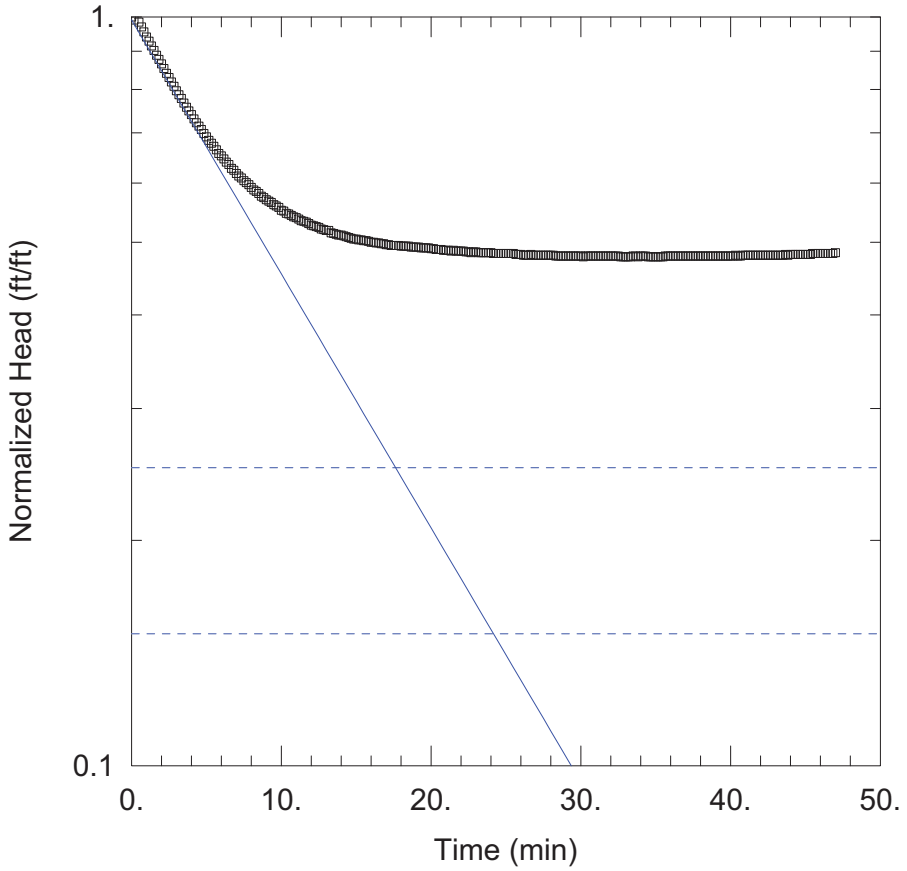

MW-40 TEST 6

Data Set: J:\...\MW-40 t6.aqt
Date: 09/10/07 Time: 16:55:31

PROJECT INFORMATION

Company: GZA GeoEnvironmental
Client: Indian Point Energy Center
Project: 41.0017869.10
Location: Buchanan, New York
Test Well: MW-40 (80.0-90.0)
Test Date: 5/12/06

AQUIFER DATA

Saturated Thickness: 300. ft Anisotropy Ratio (Kz/Kr): 0.1

WELL DATA (MW-40 Test 6)

Initial Displacement: 11.7 ft Static Water Column Height: 74.4 ft
Total Well Penetration Depth: 74.4 ft Screen Length: 10. ft
Casing Radius: 0.08333 ft Wellbore Radius: 0.159 ft

SOLUTION

Aquifer Model: Unconfined Solution Method: Hvorslev

K = 0.2067 ft/day y0 = 11.59 ft

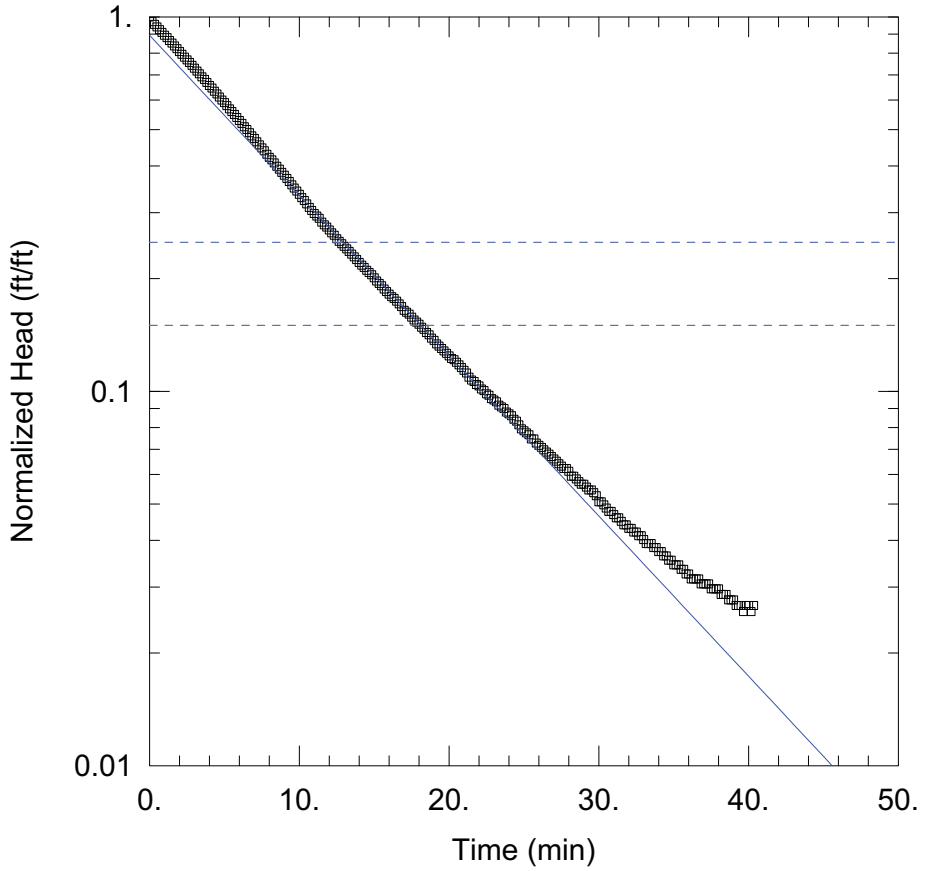

MW-40 TEST 5

Data Set: J:\...\MW-40 t5.aqt
Date: 04/19/07 Time: 15:51:04

PROJECT INFORMATION

Company: GZA GeoEnvironmental
Client: Indian Point Energy Center
Project: 41.0017869.10
Location: Buchanan, New York
Test Well: MW-40 (95.0-105.0)
Test Date: 5/11/06

AQUIFER DATA

Saturated Thickness: 300. ft Anisotropy Ratio (Kz/Kr): 0.1

WELL DATA (MW-40 Test 5)

Initial Displacement: 15. ft Static Water Column Height: 88.87 ft
Total Well Penetration Depth: 88.87 ft Screen Length: 10. ft
Casing Radius: 0.08333 ft Wellbore Radius: 0.159 ft

SOLUTION

Aquifer Model: Unconfined Solution Method: Hvorslev

K = 0.2608 ft/day y0 = 13.4 ft

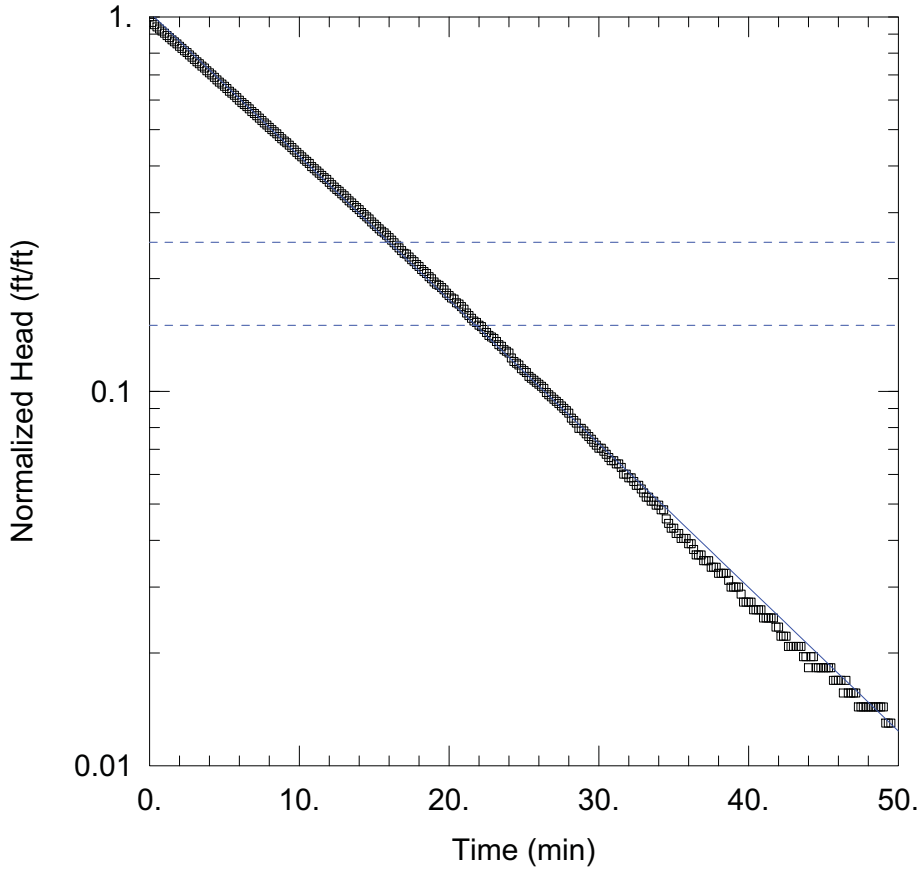

MW-40 TEST 4

Data Set: J:\...\MW-40 t4.aqt
Date: 04/19/07 Time: 15:51:29

PROJECT INFORMATION

Company: GZA GeoEnvironmental
Client: Indian Point Energy Center
Project: 41.0017869.10
Location: Buchanan, New York
Test Well: MW-40 (127.0-137.0)
Test Date: 5/11/06

AQUIFER DATA

Saturated Thickness: 300. ft Anisotropy Ratio (Kz/Kr): 0.1

WELL DATA (MW-40 Test 4)

Initial Displacement: 11. ft Static Water Column Height: 120.9 ft
Total Well Penetration Depth: 120.9 ft Screen Length: 10. ft
Casing Radius: 0.08333 ft Wellbore Radius: 0.159 ft

SOLUTION

Aquifer Model: Unconfined Solution Method: Hvorslev

K = 0.2339 ft/day y0 = 11.31 ft

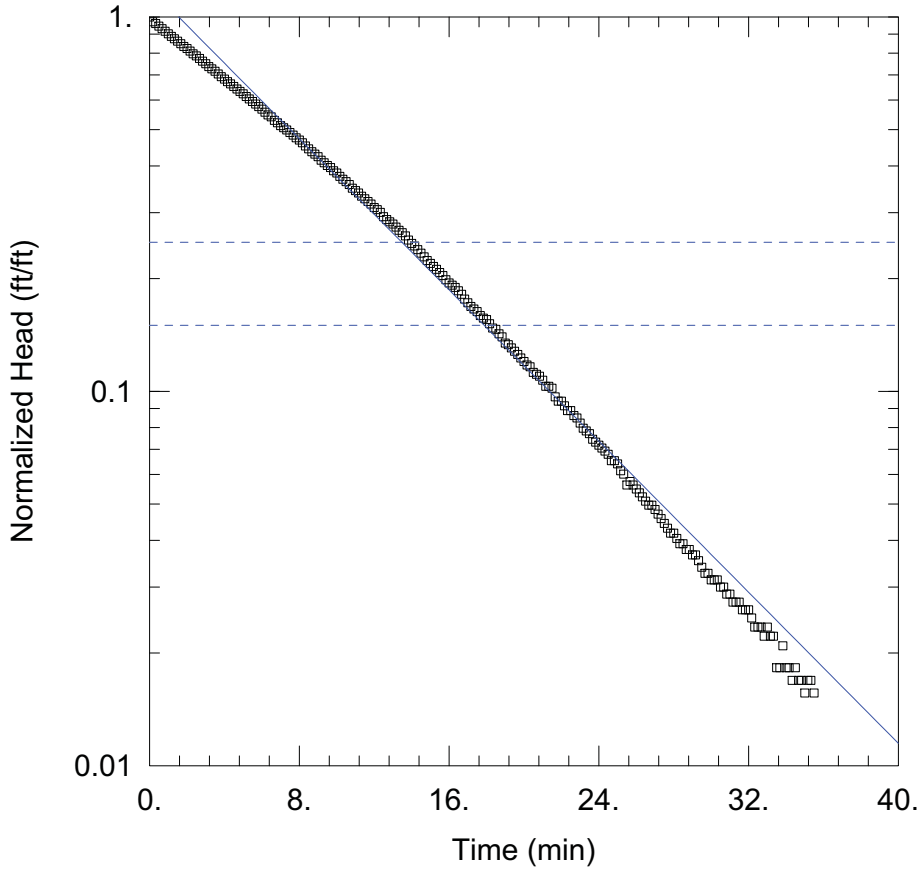

MW-40 TEST 3

Data Set: J:\...\MW-40 t3.aqt
Date: 04/19/07 Time: 15:50:04

PROJECT INFORMATION

Company: GZA GeoEnvironmental
Client: Indian Point Energy Center
Project: 41.0017869.10
Location: Buchanan, New York
Test Well: MW-40 (146.0-156.0)
Test Date: 5/11/06

AQUIFER DATA

Saturated Thickness: 300. ft Anisotropy Ratio (Kz/Kr): 0.1

WELL DATA (MW-40 Test 3)

Initial Displacement: 11. ft Static Water Column Height: 139.9 ft
Total Well Penetration Depth: 139.9 ft Screen Length: 10. ft
Casing Radius: 0.08333 ft Wellbore Radius: 0.159 ft

SOLUTION

Aquifer Model: Unconfined Solution Method: Hvorslev

K = 0.3075 ft/day y0 = 13.18 ft

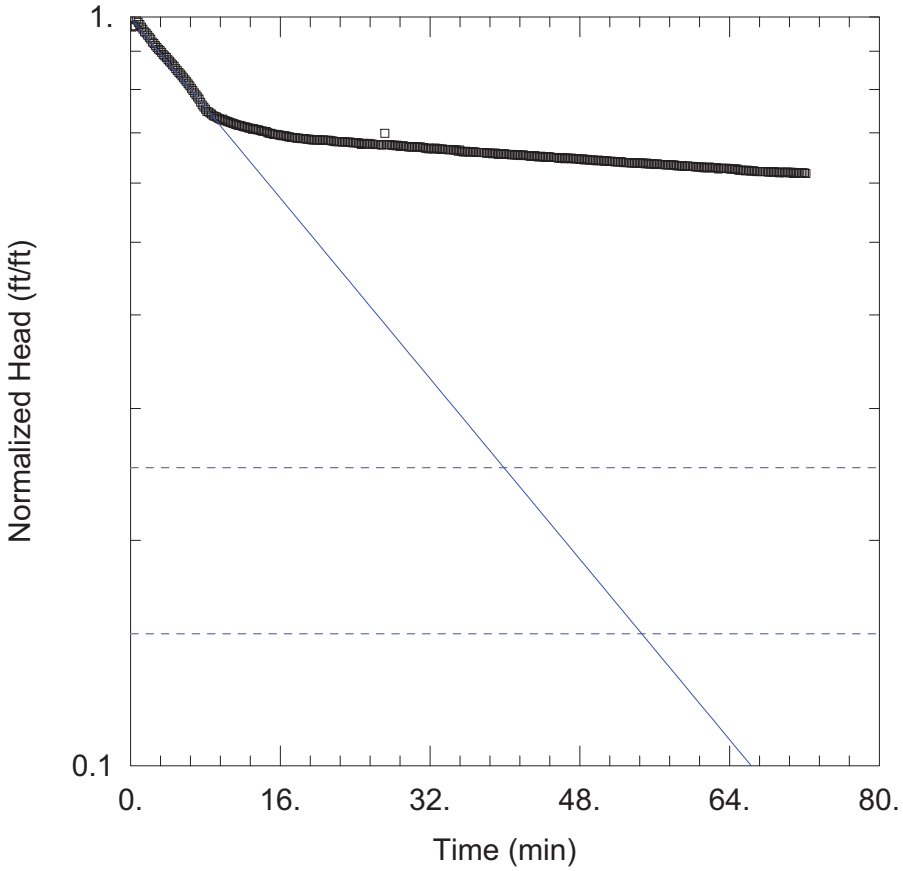

MW-40 TEST 2

Data Set: J:\...\MW-40 t2.aqt
Date: 09/10/07 Time: 16:55:08

PROJECT INFORMATION

Company: GZA GeoEnvironmental
Client: Indian Point Energy Center
Project: 41.0017869.10
Location: Buchanan, New York
Test Well: MW-40 (160.0-170.0)
Test Date: 5/10/06

AQUIFER DATA

Saturated Thickness: 300. ft Anisotropy Ratio (Kz/Kr): 0.1

WELL DATA (MW-40 Test 2)

Initial Displacement: 11.5 ft Static Water Column Height: 154. ft
Total Well Penetration Depth: 154. ft Screen Length: 10. ft
Casing Radius: 0.08333 ft Wellbore Radius: 0.159 ft

SOLUTION

Aquifer Model: Unconfined Solution Method: Hvorslev

K = 0.0918 ft/day y0 = 11.48 ft

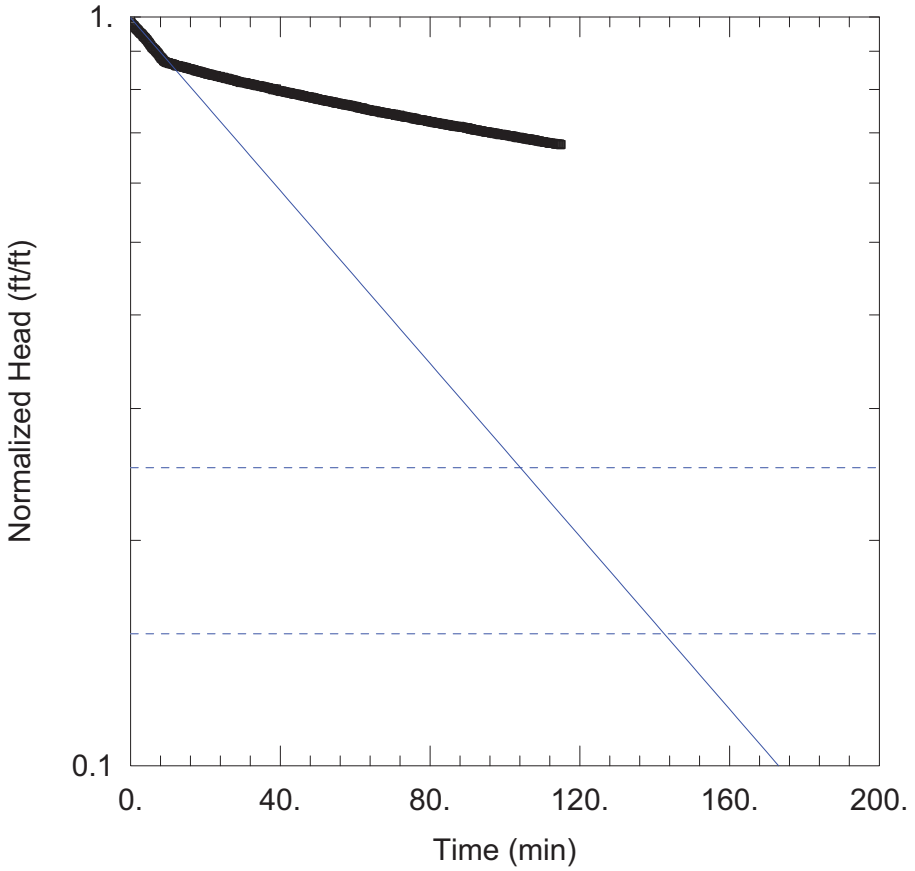

MW-40 TEST 1

Data Set: J:\...\MW-40 t1.aqt
Date: 09/10/07 Time: 16:54:53

PROJECT INFORMATION

Company: GZA GeoEnvironmental
Client: Indian Point Energy Center
Project: 41.0017869.10
Location: Buchanan, New York
Test Well: MW-40 (178.0-188.0)
Test Date: 5/10/06

AQUIFER DATA

Saturated Thickness: 300. ft Anisotropy Ratio (Kz/Kr): 0.1

WELL DATA (MW-40 Test 1)

Initial Displacement: 20. ft Static Water Column Height: 136.1 ft
Total Well Penetration Depth: 136.1 ft Screen Length: 10. ft
Casing Radius: 0.08333 ft Wellbore Radius: 0.159 ft

SOLUTION

Aquifer Model: Unconfined Solution Method: Hvorslev

K = 0.03516 ft/day y0 = 19.95 ft

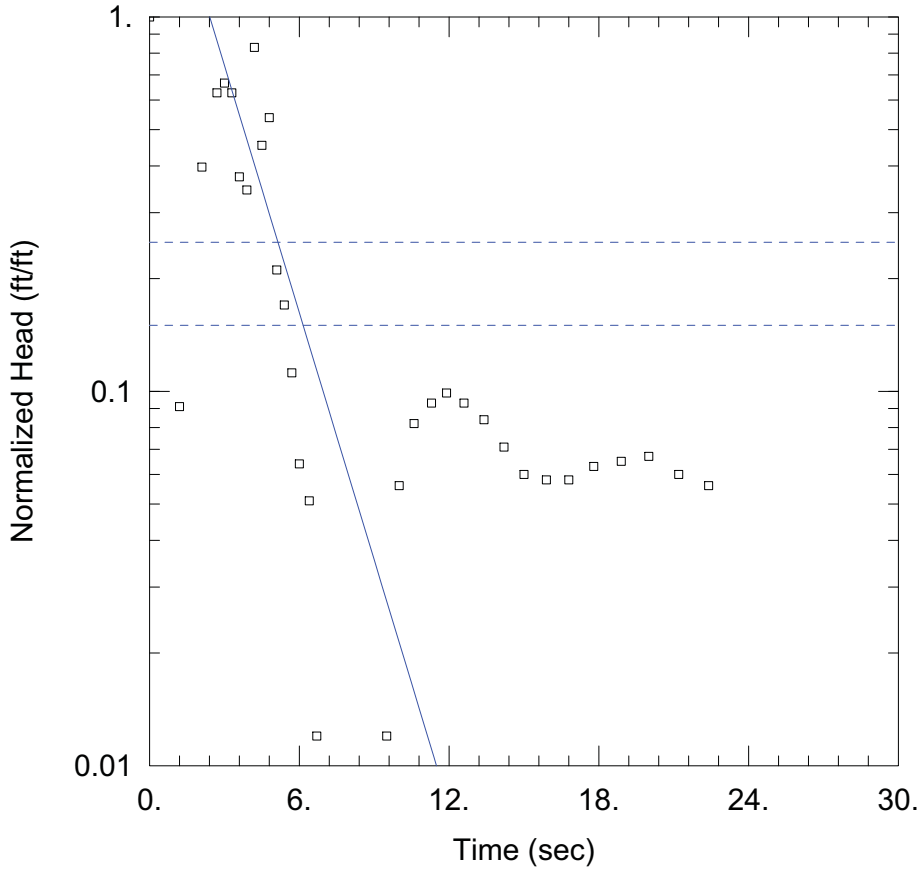

MW-41-64 SLUG TEST (RISING)

Data Set: J:\...\MW-41-64rising.aqt
Date: 04/23/07 Time: 14:38:48

PROJECT INFORMATION

Company: GZA GeoEnvironmental
Client: Indian Point Energy Center
Project: 41.0017869.10
Location: Buchanan, New York
Test Well: MW-41-64
Test Date: 5/2/06

AQUIFER DATA

Saturated Thickness: 300. ft Anisotropy Ratio (Kz/Kr): 0.1

WELL DATA (MW-41-64)

Initial Displacement: 1. ft Static Water Column Height: 64. ft
Total Well Penetration Depth: 9. ft Screen Length: 9. ft
Casing Radius: 0.04167 ft Wellbore Radius: 0.159 ft

SOLUTION

Aquifer Model: Unconfined Solution Method: Hvorslev

K = 21.9 ft/day y0 = 3.392 ft

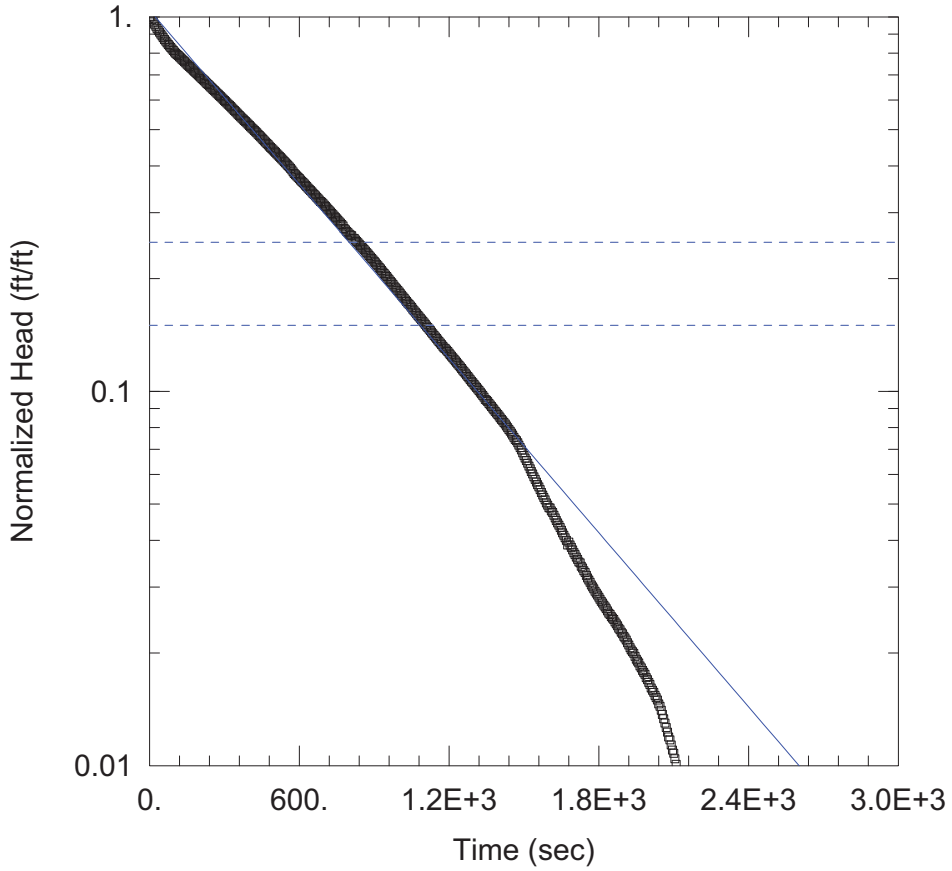

MW-41-42 SLUG TEST (RISING)

Data Set: J:\...\MW-41-42rising.aqt
Date: 09/11/07 Time: 18:49:26

PROJECT INFORMATION

Company: GZA GeoEnvironmental
Client: Indian Point Energy Center
Project: 41.0017869.10
Location: Buchanan, New York
Test Well: MW-41-42
Test Date: 5/11/06

AQUIFER DATA

Saturated Thickness: 300. ft Anisotropy Ratio (Kz/Kr): 0.1

WELL DATA (MW-41-42)

Initial Displacement: 14.08 ft Static Water Column Height: 22.46 ft
Total Well Penetration Depth: 22.46 ft Screen Length: 22.46 ft
Casing Radius: 0.04167 ft Wellbore Radius: 0.159 ft

SOLUTION

Aquifer Model: Unconfined Solution Method: Hvorslev

K = 0.03638 ft/day y0 = 14.68 ft

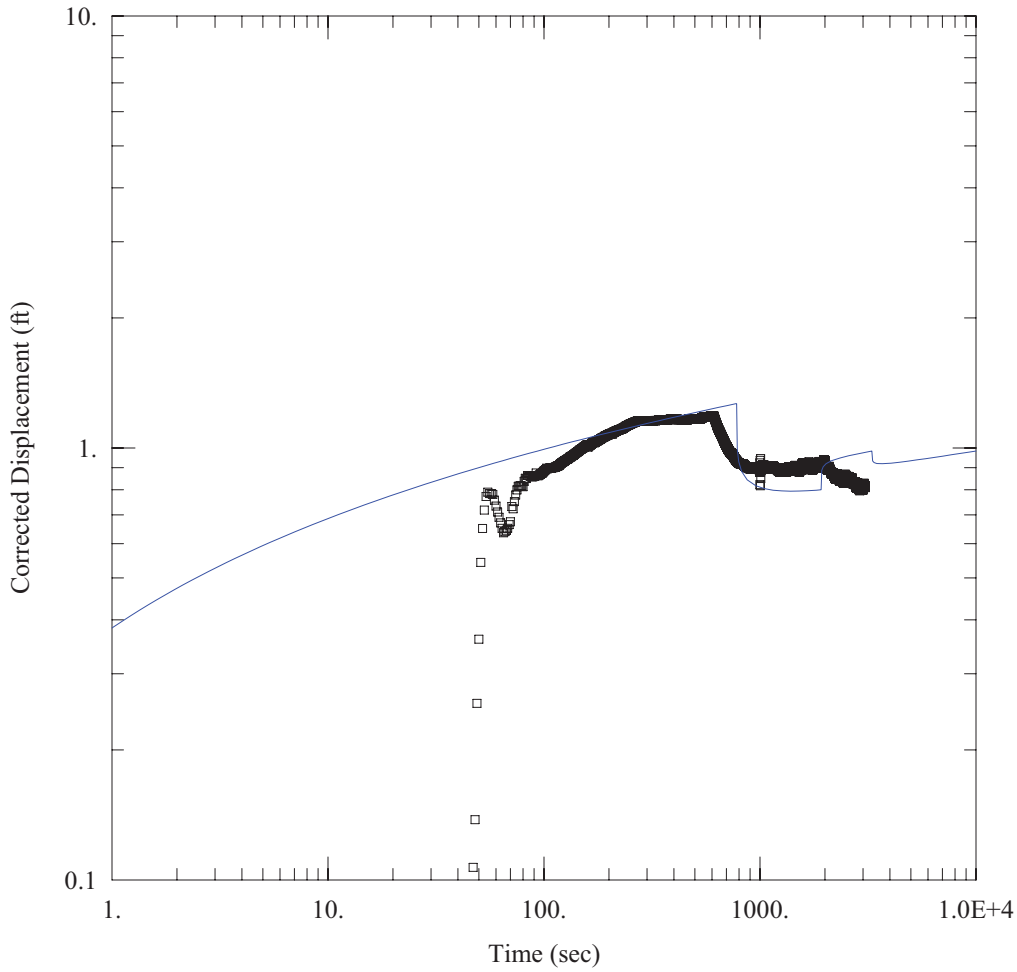

MW-42-51 EXTRACTION

Data Set: J:\...\sy42-51 theis.aqt
Date: 09/11/07 Time: 18:50:30

PROJECT INFORMATION

Company: GZA GeoEnvironmental
Client: Indian Point Energy Center
Project: 41.0017869.10
Location: Buchanan, NY
Test Well: MW-42-51
Test Date: 5/30/06

WELL DATA

Pumping Wells

Well Name	X (ft)	Y (ft)
MW-42-51	0	0

Observation Wells

Well Name	X (ft)	Y (ft)
▫ MW-42-51	0	0

SOLUTION

Aquifer Model: Unconfined
Solution Method: Theis

T = 12.64 ft^2/day
S = 0.00076
Kz/Kr = 1.
b = 50. ft

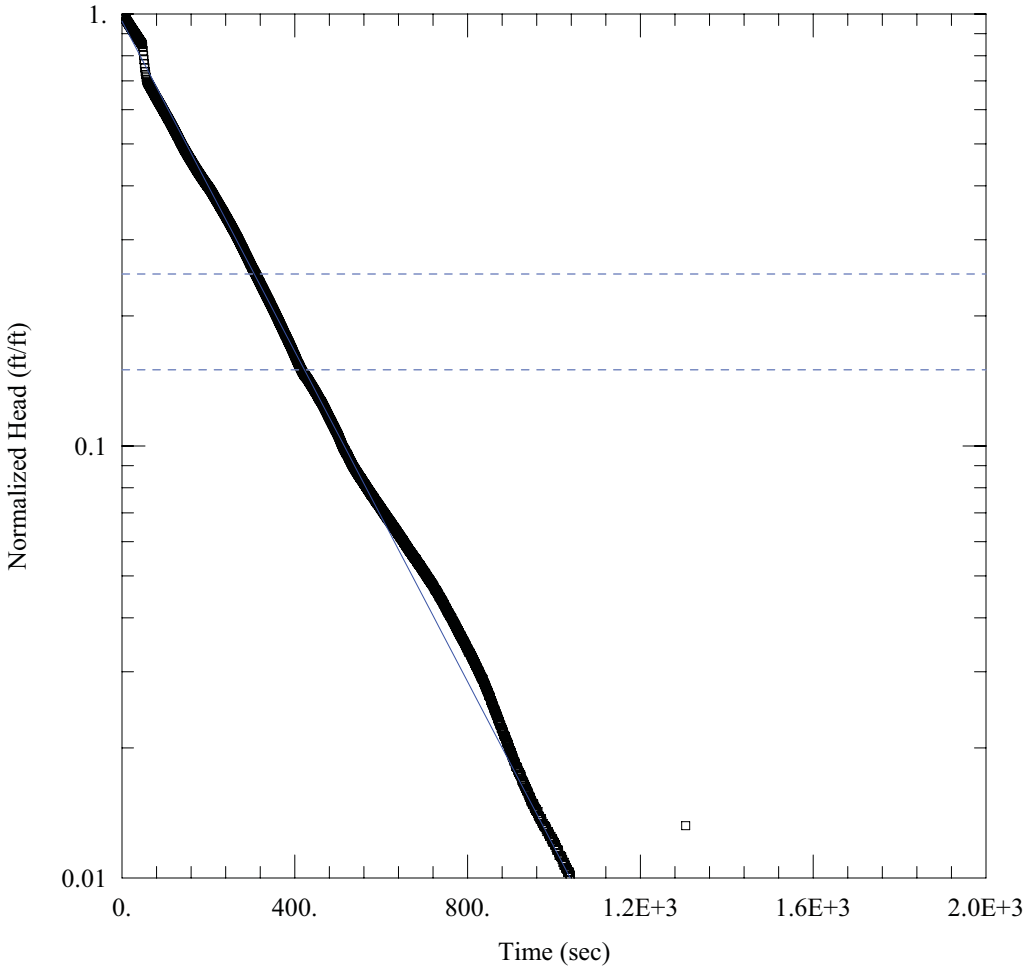

MW-42-51 RISING HEAD TEST

Data Set: J:\...\MW42-51 rising head.aqt
Date: 04/24/07 Time: 09:27:43

PROJECT INFORMATION

Company: GZA GeoEnvironmental
Client: Indian Point Energy Center
Project: 41.0017869.10
Location: Buchanan, NY
Test Well: MW-42-51
Test Date: 5/30/06

AQUIFER DATA

Saturated Thickness: 300. ft Anisotropy Ratio (Kz/Kr): 0.1

WELL DATA (MW-42-51)

Initial Displacement: 12.42 ft Static Water Column Height: 14.37 ft
Total Well Penetration Depth: 14.37 ft Screen Length: 14.37 ft
Casing Radius: 0.08333 ft Wellbore Radius: 0.159 ft

SOLUTION

Aquifer Model: Unconfined Solution Method: Hvorslev

K = 0.5196 ft/day y0 = 11.95 ft

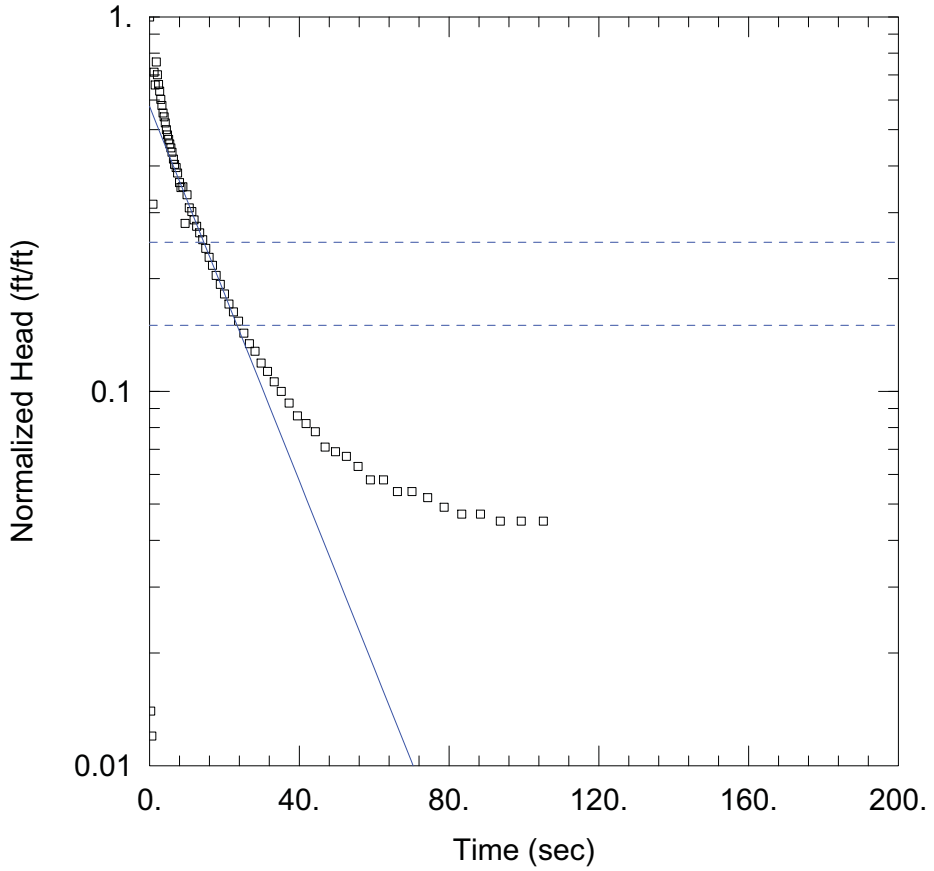

MW-42-79 SLUG TEST (RISING)

Data Set: J:\...\MW-42-79rising.aqt
Date: 04/23/07 Time: 16:05:13

PROJECT INFORMATION

Company: GZA GeoEnvironmental
Client: Indian Point Energy Center
Project: 41.0017869.10
Location: Buchanan, New York
Test Well: MW-42-79
Test Date: 4.27/06

AQUIFER DATA

Saturated Thickness: 300. ft Anisotropy Ratio (Kz/Kr): 0.1

WELL DATA (MW-42-79)

Initial Displacement: 1. ft Static Water Column Height: 46. ft
Total Well Penetration Depth: 46. ft Screen Length: 12. ft
Casing Radius: 0.04167 ft Wellbore Radius: 0.159 ft

SOLUTION

Aquifer Model: Unconfined Solution Method: Hvorslev

K = 1.97 ft/day y0 = 0.5766 ft

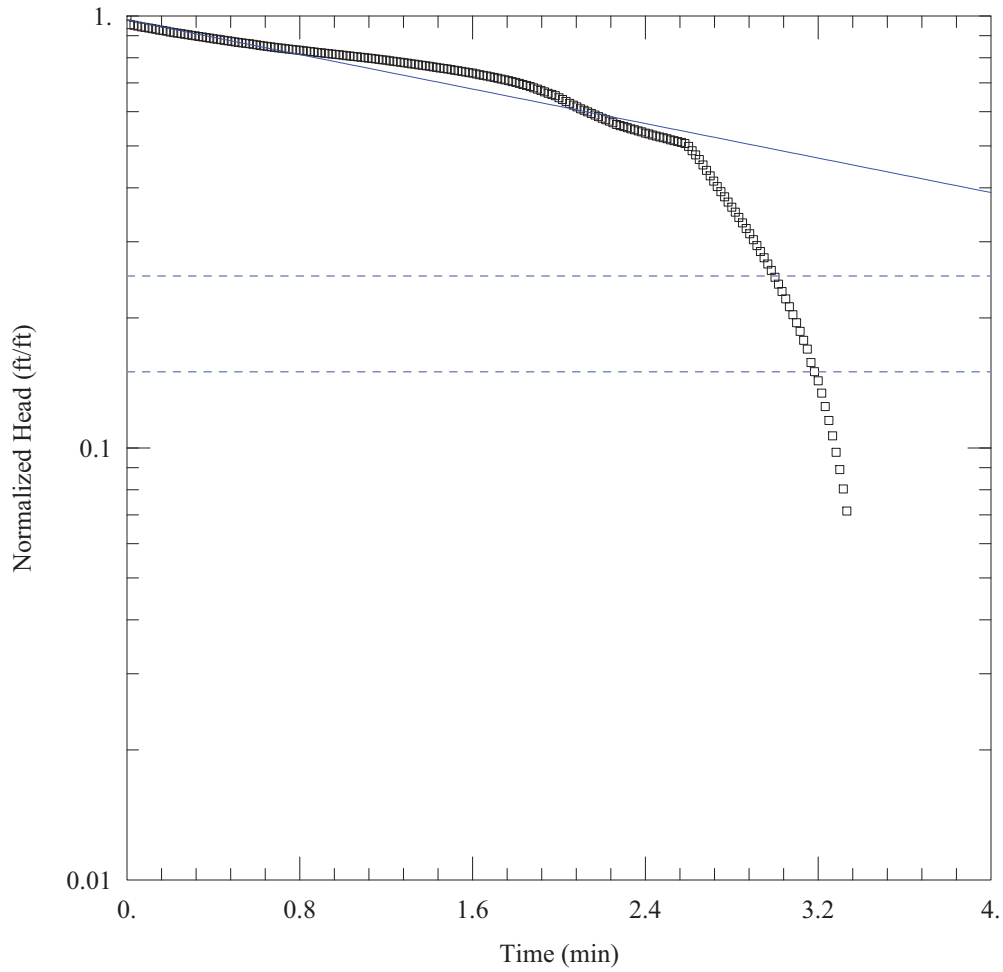

MW-43-28 RISING HEAD TEST

Data Set: J:\...\MW43-28 recovery.aqt
Date: 09/11/07 Time: 18:54:48

PROJECT INFORMATION

Company: GZA GeoEnvironmental
Client: Indian Point Energy Center
Project: 41.0017869.10
Location: Buchanan, NY
Test Well: MW-43-28
Test Date: 5/23/06

AQUIFER DATA

Saturated Thickness: 300. ft Anisotropy Ratio (Kz/Kr): 0.1

WELL DATA (MW-43-28)

Initial Displacement: 5.6 ft Static Water Column Height: 14.48 ft
Total Well Penetration Depth: 14.48 ft Screen Length: 14.48 ft
Casing Radius: 0.08333 ft Wellbore Radius: 0.159 ft

SOLUTION

Aquifer Model: Unconfined Solution Method: Hvorslev

K = 0.4494 ft/day y0 = 5.478 ft

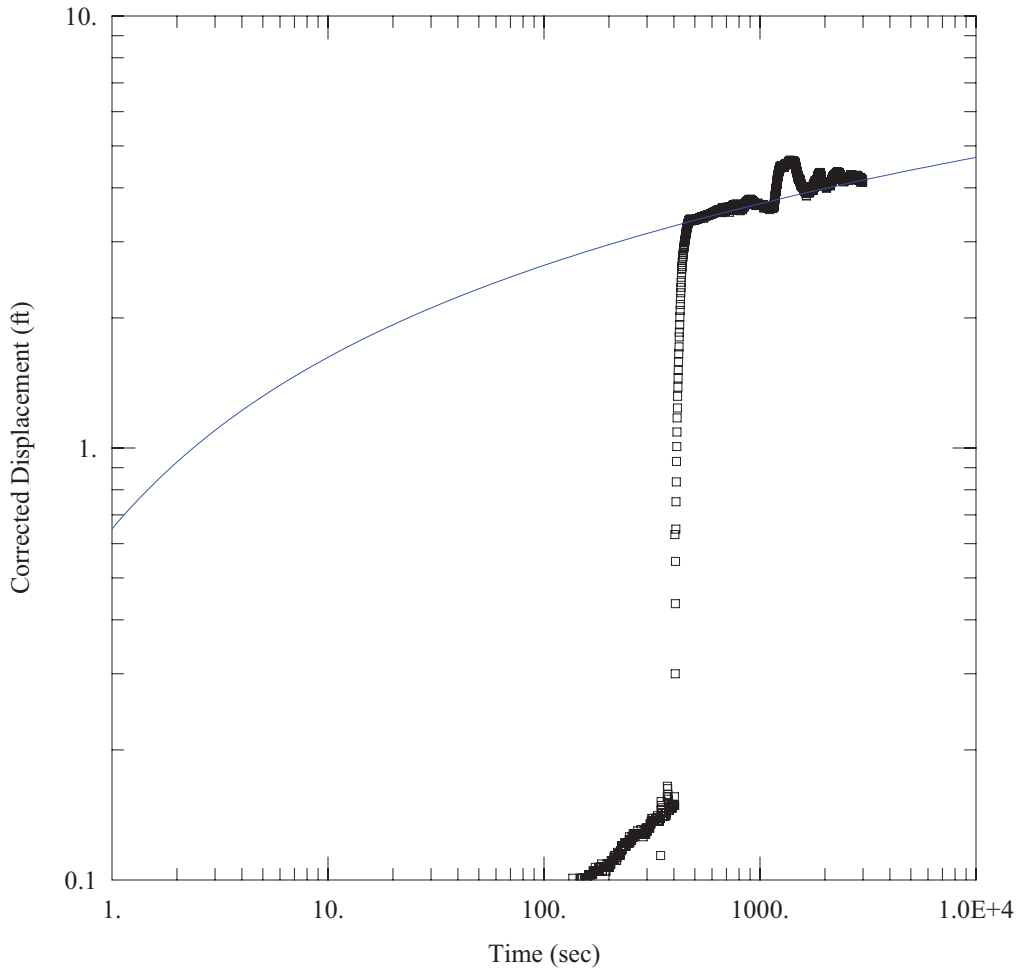

MW-43-62 EXTRACTION

Data Set: J:\...\sy43-62 theis.aqt
Date: 09/11/07 Time: 18:55:19

PROJECT INFORMATION

Company: GZA GeoEnvironmental
Client: Indian Point Energy Center
Project: 41.0017869.10
Location: Buchanan, NY
Test Well: MW-43-62
Test Date: 5/22/06

WELL DATA

Pumping Wells

Well Name	X (ft)	Y (ft)
MW-43-62	0	0

Observation Wells

Well Name	X (ft)	Y (ft)
▫ MW-43-62	0	0

SOLUTION

Aquifer Model: Unconfined
Solution Method: Theis

T = 3.594 ft^2/day
S = 0.001003
Kz/Kr = 1.
b = 50. ft

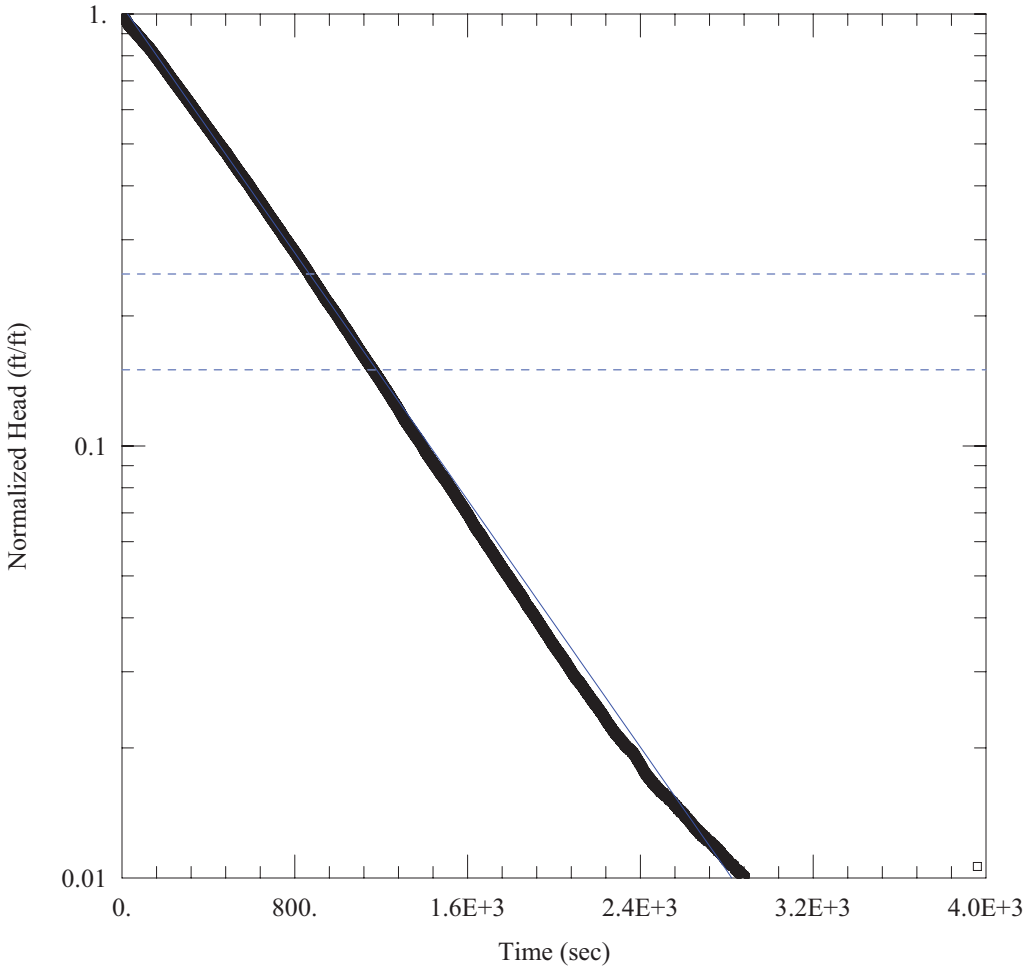

MW-43-62 RISING HEAD TEST

Data Set: J:\...\MW43-62 rising head.aqt
Date: 09/11/07 Time: 18:55:52

PROJECT INFORMATION

Company: GZA GeoEnvironmental
Client: Indian Point Energy Center
Project: 41.0017869.10
Location: Buchanan, NY
Test Well: MW-43-62
Test Date: 5/22/06

AQUIFER DATA

Saturated Thickness: 300. ft Anisotropy Ratio (Kz/Kr): 0.1

WELL DATA (MW-43-62)

Initial Displacement: 31.52 ft Static Water Column Height: 46.4 ft
Total Well Penetration Depth: 49.4 ft Screen Length: 25. ft
Casing Radius: 0.04167 ft Wellbore Radius: 0.159 ft

SOLUTION

Aquifer Model: Unconfined Solution Method: Hvorslev

K = 0.03067 ft/day y0 = 32.91 ft

Estimate Transmissivity from Specific Capcity Data

$R := 0.167$ Radius of Well (FT.)

$S := 0.01$ Storage Coefficient, Assumed

$t := \frac{27}{1440}$ Pumping Duration (Days.)

$T := 100$ Transmissivity (GPD/FT) *Initial Guess*

$Qp := 0.337$ Pumping Rate (GPM)

$s := 3.8$ Drawdown (FT.)

$\frac{Qp}{s} = 0.089$ Specific Capcity (GPM/FT)

$$aT := \text{root}\left(\frac{Qp}{s} - \frac{T}{264 \cdot \log\left(\frac{0.3 \cdot T \cdot t}{R^2 \cdot S}\right)}, T\right)$$

Groundwater Resource Evaluation
William C. Walton Mc-Graw-hill 1970

$T := aT$

$T = 74$ Computed Transmissivity (GPD/ Ft)

$Tft := \frac{T}{7.48}$

$Tft = 10$ **Computed Transmissivity (Sq.ft./Day)**

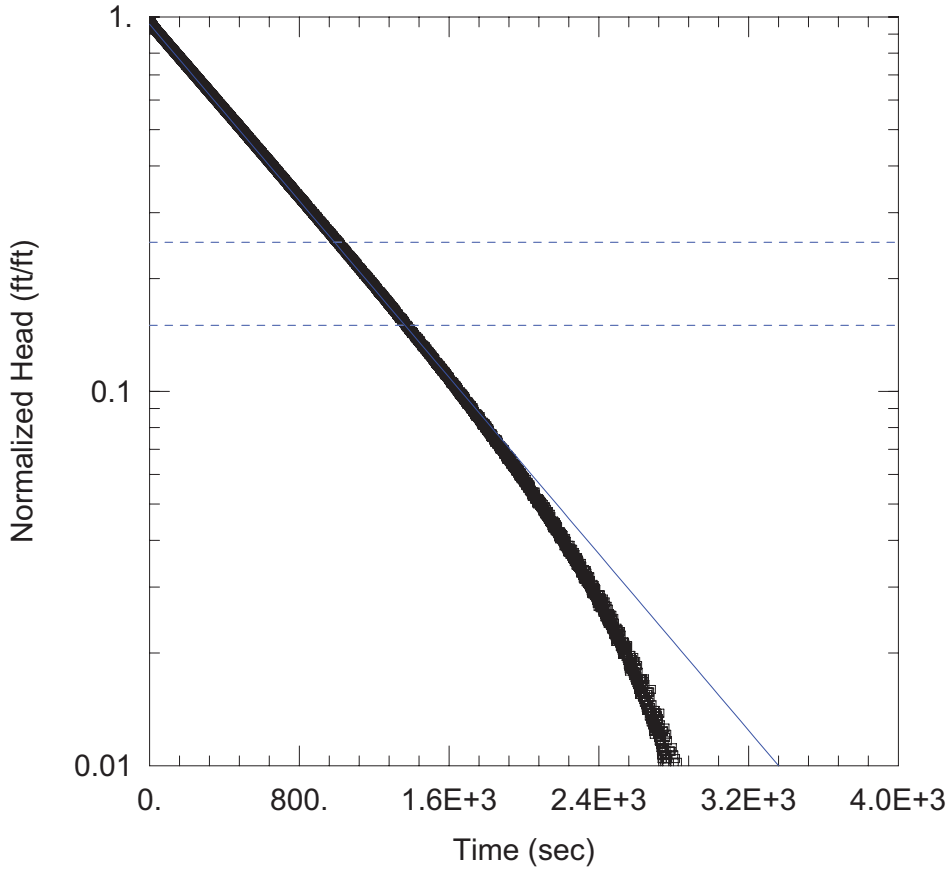

MW-44-104 PNEUMATIC SLUG (TEST2)

Data Set: J:\...\MW-44-104 T2.aqt
Date: 09/11/07 Time: 18:57:40

PROJECT INFORMATION

Company: GZA GeoEnvironmental
Client: Indian Point Energy Center
Project: 41.0017869.10
Location: Buchanan, New York
Test Well: MW-44-104
Test Date: 5/8/07

AQUIFER DATA

Saturated Thickness: 300. ft Anisotropy Ratio (Kz/Kr): 0.1

WELL DATA (MW-44-104)

Initial Displacement: 8.325 ft Static Water Column Height: 37.22 ft
Total Well Penetration Depth: 37.22 ft Screen Length: 28. ft
Casing Radius: 0.08333 ft Wellbore Radius: 0.159 ft

SOLUTION

Aquifer Model: Unconfined Solution Method: Hvorslev

K = 0.09192 ft/day y0 = 7.959 ft

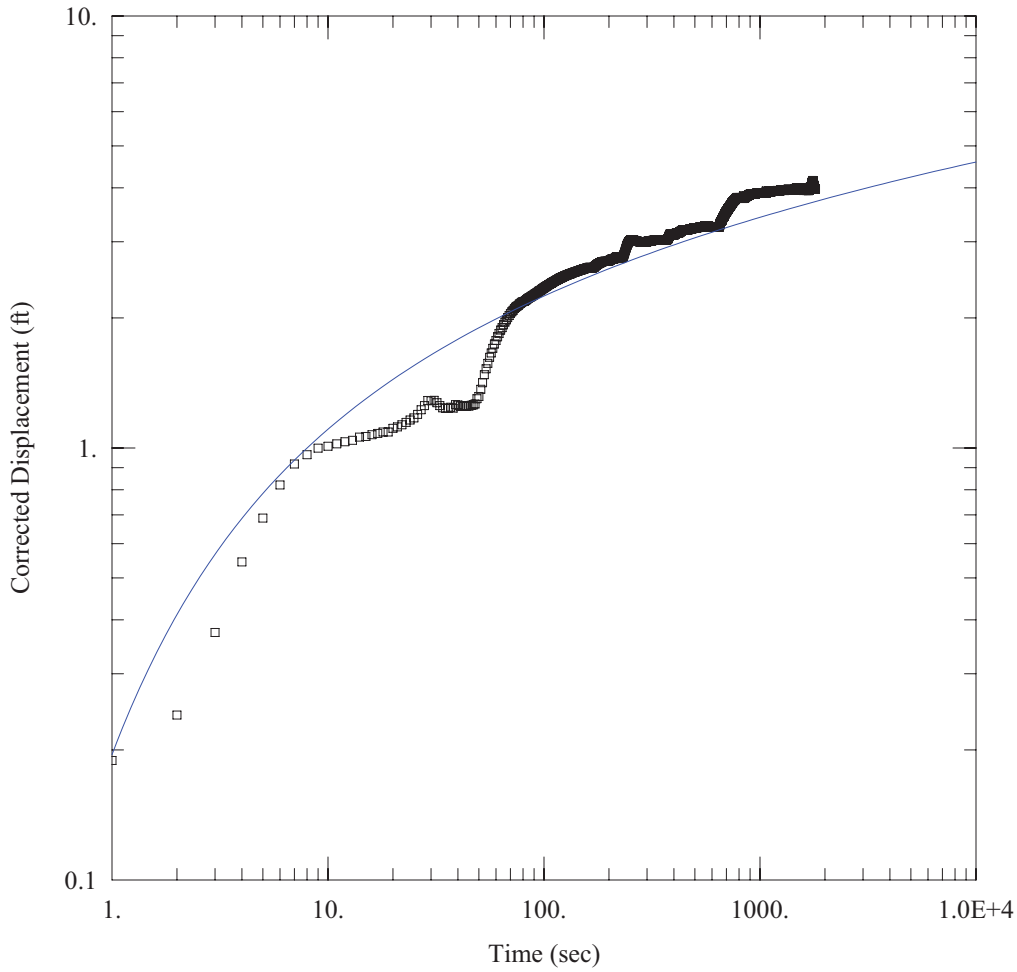

MW-45-43 EXTRACTION

Data Set: J:\...\sy45-43 mw45-43 theis.aqt
Date: 09/11/07 Time: 18:59:02

PROJECT INFORMATION

Company: GZA GeoEnvironmental
Client: Indian Point Energy Center
Project: 41.0017869.10
Location: Buchanan, NY
Test Well: MW-45-43
Test Date: 5/24/06

WELL DATA

Pumping Wells

Well Name	X (ft)	Y (ft)
MW-45-43	0	0

Observation Wells

Well Name	X (ft)	Y (ft)
▫ MW-45-43	0	0

SOLUTION

Aquifer Model: Unconfined
Solution Method: Theis

T = 0.09019 ft^2/day
S = 0.0001136
Kz/Kr = 1.
b = 300. ft

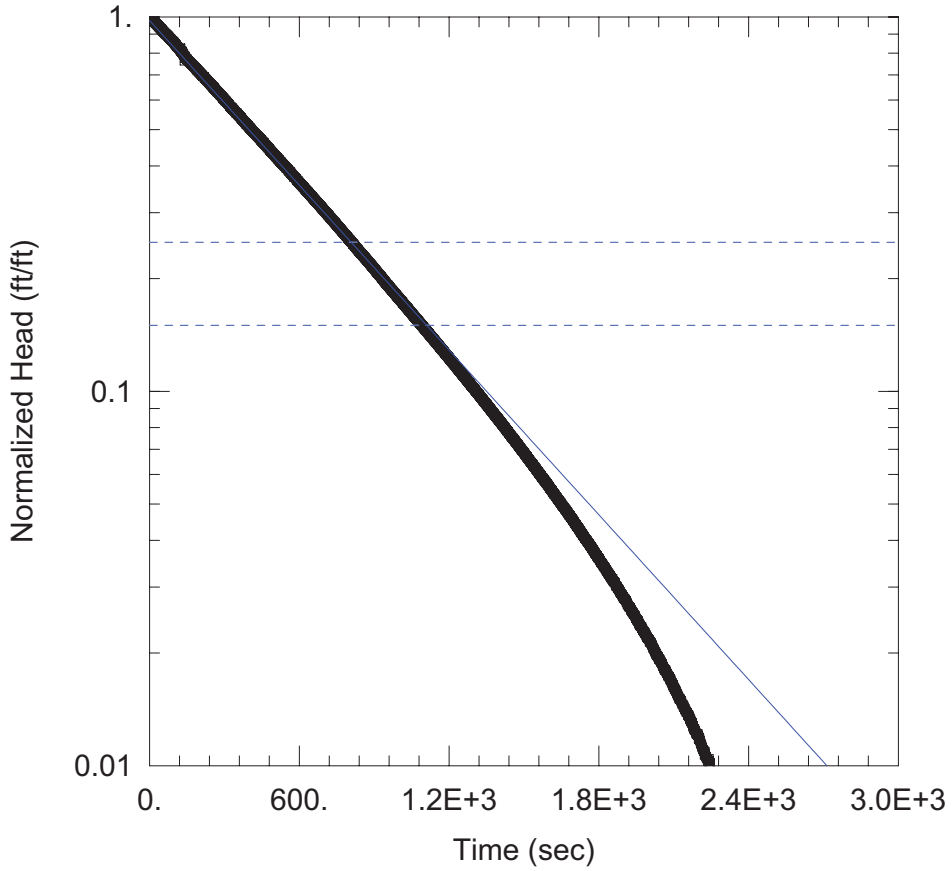

MW-45-62 PNEUMATIC SLUG (TEST1)

Data Set: J:\...\MW-45-62 T1.aqt
Date: 07/01/07 Time: 18:08:00

PROJECT INFORMATION

Company: GZA GeoEnvironmental
Client: Indian Point Energy Center
Project: 41.0017869.10
Location: Buchanan, New York
Test Well: MW-45-62
Test Date: 5/7/07

AQUIFER DATA

Saturated Thickness: 300. ft Anisotropy Ratio (Kz/Kr): 0.1

WELL DATA (MW-45-62)

Initial Displacement: 16.2 ft Static Water Column Height: 40.54 ft
Total Well Penetration Depth: 40.54 ft Screen Length: 14.5 ft
Casing Radius: 0.08333 ft Wellbore Radius: 0.159 ft

SOLUTION

Aquifer Model: Unconfined Solution Method: Hvorslev

K = 0.1979 ft/day y0 = 15.85 ft

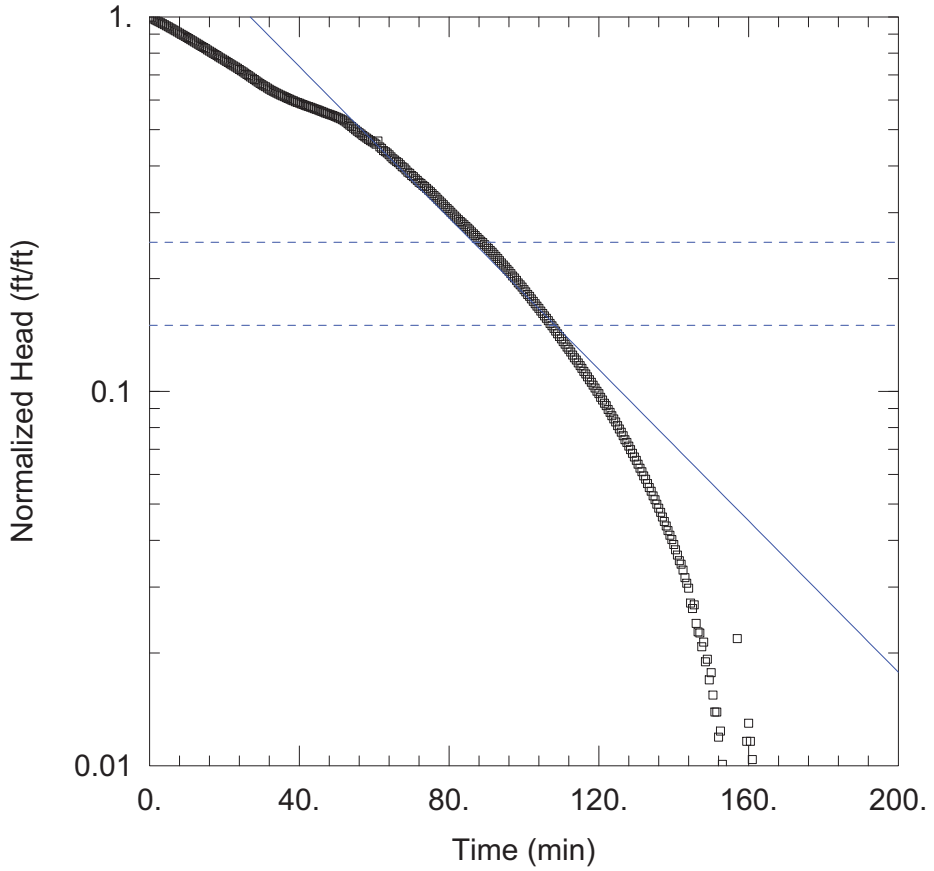

MW-46 EXTRACTION TEST RECOVERY

Data Set: J:\...\SY MW-46 recovery.aqt
Date: 07/01/07 Time: 17:57:12

PROJECT INFORMATION

Company: GZA GeoEnvironmental
Client: Indian Point Energy Center
Project: 41.0017869.10
Location: Buchanan, New York
Test Well: MW-46
Test Date: 5/23/07

AQUIFER DATA

Saturated Thickness: 300. ft
Anisotropy Ratio (Kz/Kr): 0.1

WELL DATA (MW-46)

Initial Displacement: 6.544 ft
Static Water Column Height: 25.68 ft
Total Well Penetration Depth: 25.68 ft
Screen Length: 25.68 ft
Casing Radius: 0.159 ft
Wellbore Radius: 0.159 ft

SOLUTION

Aquifer Model: Unconfined
Solution Method: Hvorslev

K = 0.1029 ft/day
y0 = 12.24 ft

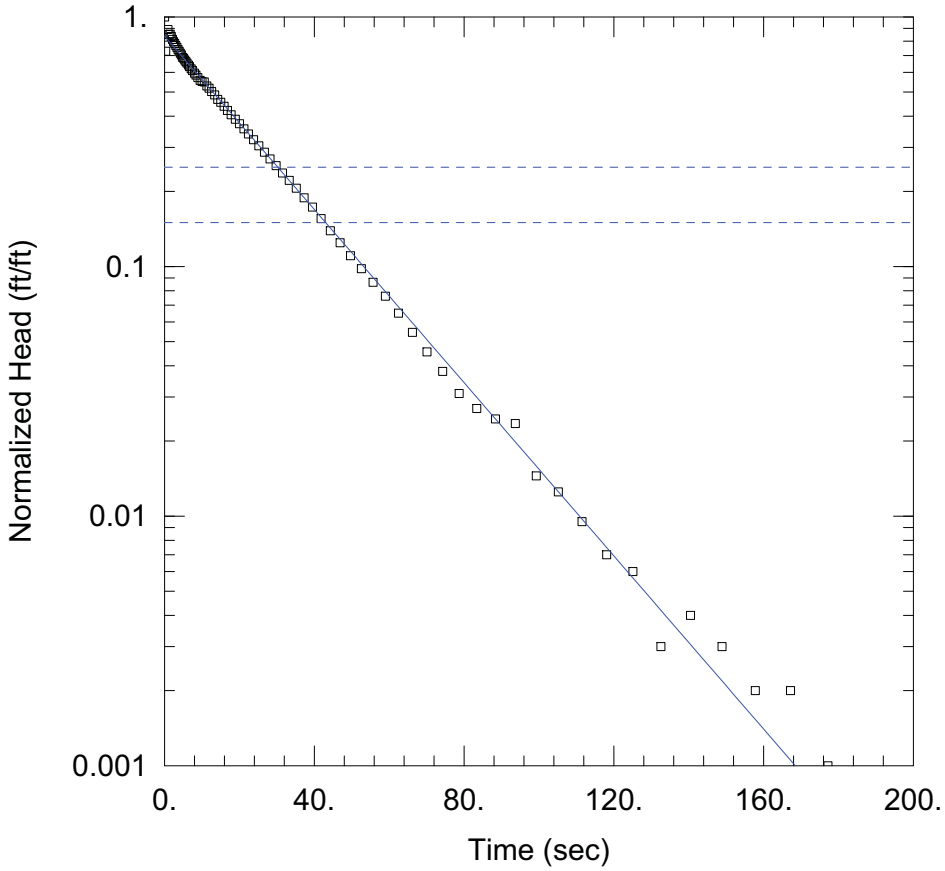

MW-47-80 SLUG TEST (RISING)

Data Set: J:\...\MW-47-80rising.aqt
Date: 04/24/07 Time: 08:32:40

PROJECT INFORMATION

Company: GZA GeoEnvironmental
Client: Indian Point Energy Center
Project: 41.0017869.10
Location: Buchanan, New York
Test Well: MW-47-80
Test Date: 5/2/06

AQUIFER DATA

Saturated Thickness: 300. ft Anisotropy Ratio (Kz/Kr): 0.1

WELL DATA (MW-47-80)

Initial Displacement: 2. ft Static Water Column Height: 80. ft
Total Well Penetration Depth: 12. ft Screen Length: 12. ft
Casing Radius: 0.04167 ft Wellbore Radius: 0.159 ft

SOLUTION

Aquifer Model: Unconfined Solution Method: Hvorslev

K = 1.367 ft/day y0 = 1.673 ft

Estimate Transmissivity from Specific Capcity Data

$R := 0.159$ Radius of Well (FT.)

$S := 0.25$ Storage Coefficient, Assumed

$t := \frac{48}{1440}$ Pumping Duration (Days.)

$T := 100$ Transmissivity (GPD/FT) *Initial Guess*

$Qp := 2.22$ Pumping Rate (GPM)

$s := 3$ Drawdown (FT.)

$\frac{Qp}{s} = 0.74$ Specific Capcity (GPM/FT)

$$aT := \text{root}\left(\frac{Qp}{s} - \frac{T}{264 \cdot \log\left(\frac{0.3 \cdot T \cdot t}{R^2 \cdot S}\right)}, T\right)$$

Groundwater Resource Evaluation
William C. Walton Mc-Graw-hill 1970

$T := aT$

$T = 579$ Computed Transmissivity (GPD/ Ft)

$Tft := \frac{T}{7.48}$

$Tft = 77$ **Computed Transmissivity (Sq.ft./Day)**

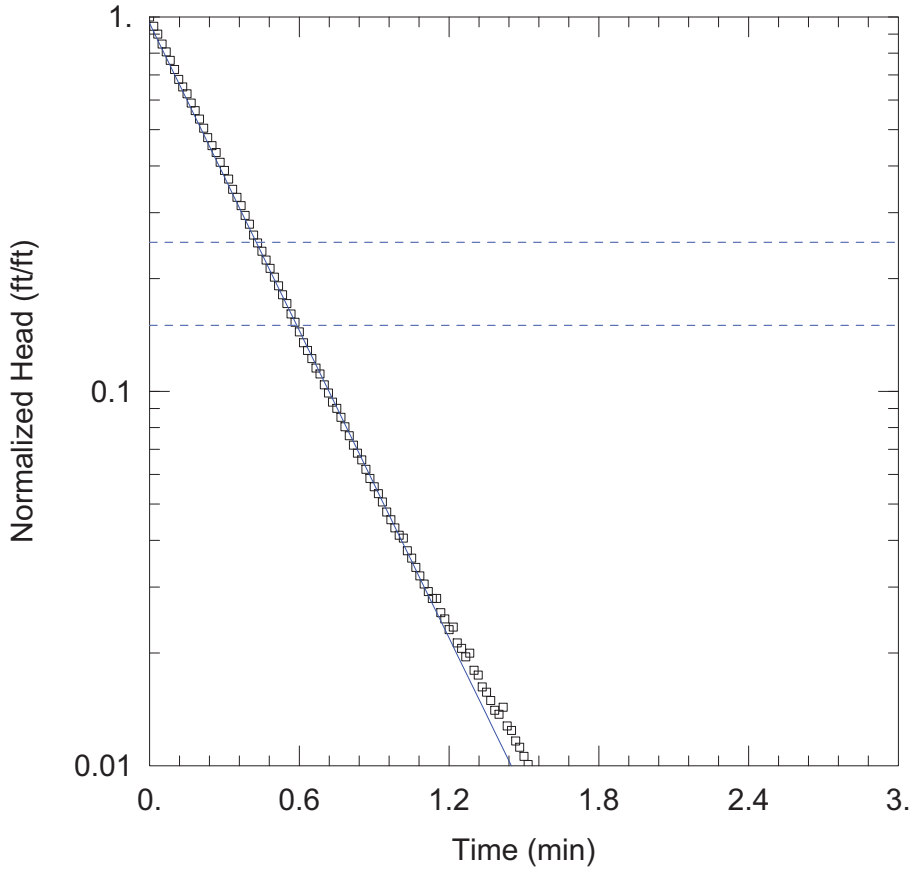

MW-48-38 PNEUMATIC SLUG TEST 1

Data Set: J:\...\MW-48-38 T1.aqt
Date: 07/01/07 Time: 18:00:29

PROJECT INFORMATION

Company: GZA GeoEnvironmental
Client: Indian Point Energy Center
Project: 41.0017869.10
Location: Buchanan, New York
Test Well: MW-48-38
Test Date: 5/25/07

AQUIFER DATA

Saturated Thickness: 300. ft Anisotropy Ratio (Kz/Kr): 0.1

WELL DATA (MW-48-38)

Initial Displacement: 11.52 ft Static Water Column Height: 25.36 ft
Total Well Penetration Depth: 25.36 ft Screen Length: 8. ft
Casing Radius: 0.04167 ft Wellbore Radius: 0.159 ft

SOLUTION

Aquifer Model: Unconfined Solution Method: Hvorslev

K = 2.496 ft/day y0 = 11.07 ft

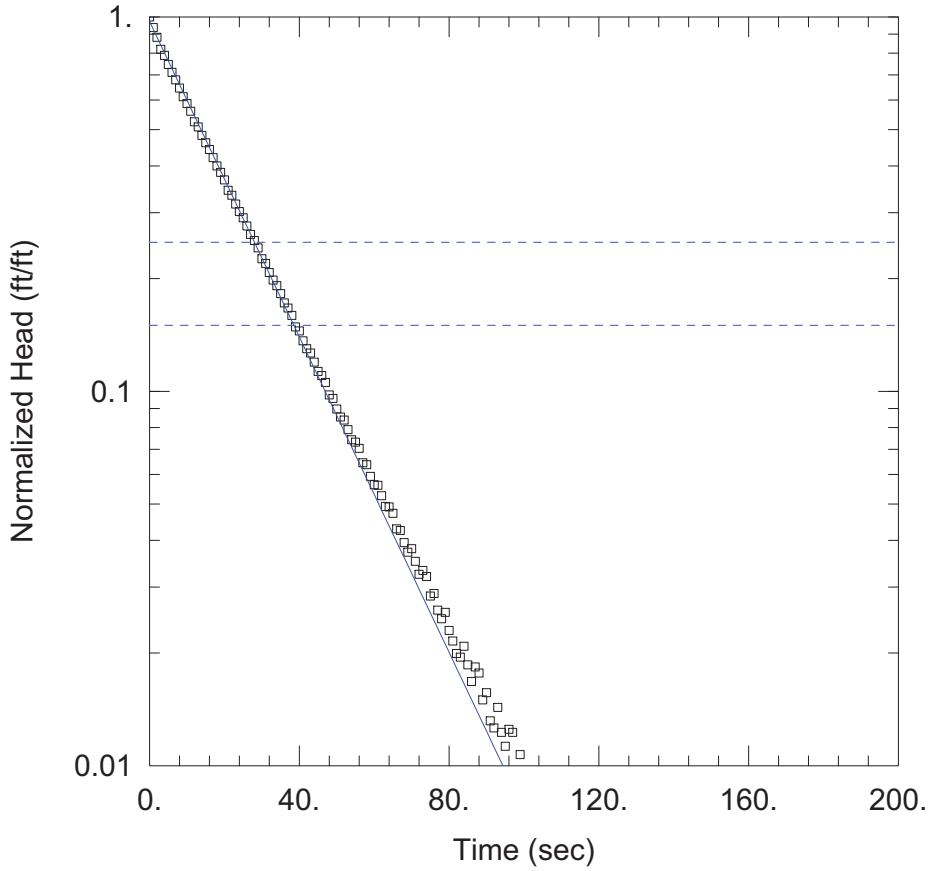

MW-49-42 PNEUMATIC SLUG (TEST1)

Data Set: J:\...\MW-49-42 T1.aqt
Date: 07/01/07 Time: 18:03:04

PROJECT INFORMATION

Company: GZA GeoEnvironmental
Client: Indian Point Energy Center
Project: 41.0017869.10
Location: Buchanan, New York
Test Well: MW-49-42
Test Date: 5/9/07

AQUIFER DATA

Saturated Thickness: 300. ft Anisotropy Ratio (Kz/Kr): 0.1

WELL DATA (MW-49-42 T1)

Initial Displacement: 8.874 ft Static Water Column Height: 32. ft
Total Well Penetration Depth: 32. ft Screen Length: 13. ft
Casing Radius: 0.08333 ft Wellbore Radius: 0.159 ft

SOLUTION

Aquifer Model: Unconfined Solution Method: Hvorslev

K = 6.218 ft/day y0 = 8.639 ft

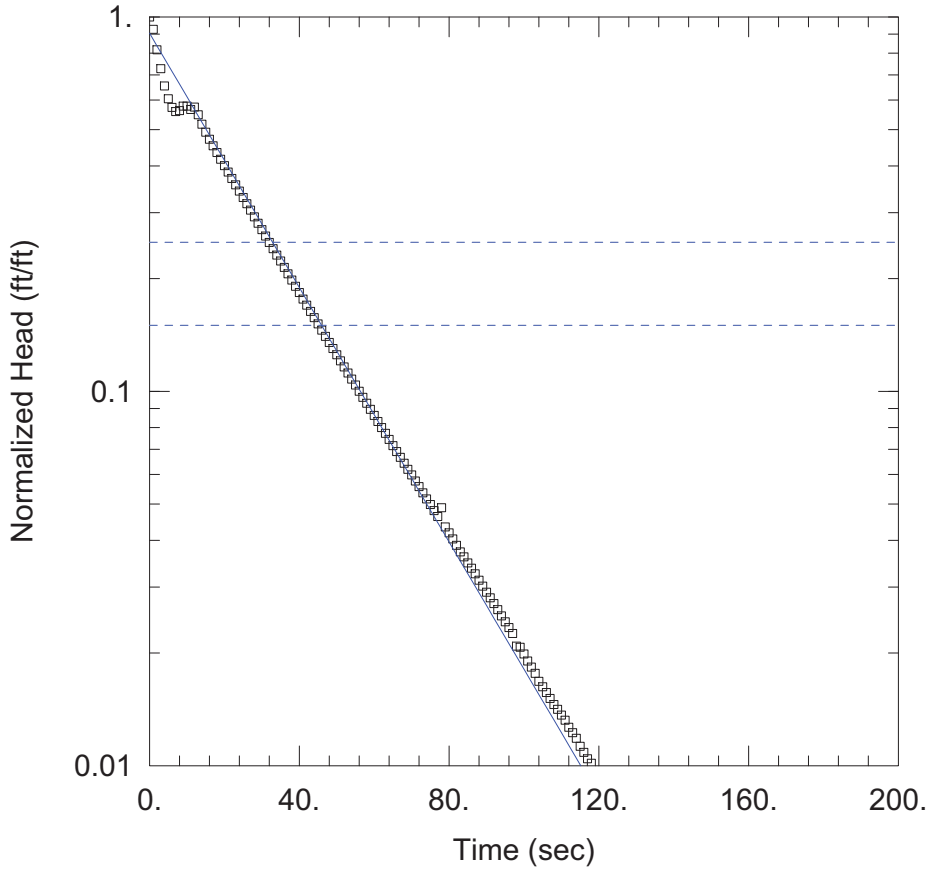

MW-49-66 PNEUMATIC SLUG (TEST1)

Data Set: J:\...\MW-49-65 T1.aqt
Date: 07/01/07 Time: 18:03:19

PROJECT INFORMATION

Company: GZA GeoEnvironmental
Client: Indian Point Energy Center
Project: 41.0017869.10
Location: Buchanan, New York
Test Well: MW-49-66
Test Date: 5/4/07

AQUIFER DATA

Saturated Thickness: 300. ft Anisotropy Ratio (Kz/Kr): 0.1

WELL DATA (MW-49-66 T1)

Initial Displacement: 14.28 ft Static Water Column Height: 52.32 ft
Total Well Penetration Depth: 52.32 ft Screen Length: 10. ft
Casing Radius: 0.08333 ft Wellbore Radius: 0.159 ft

SOLUTION

Aquifer Model: Unconfined Solution Method: Hvorslev

K = 6.209 ft/day y0 = 12.92 ft

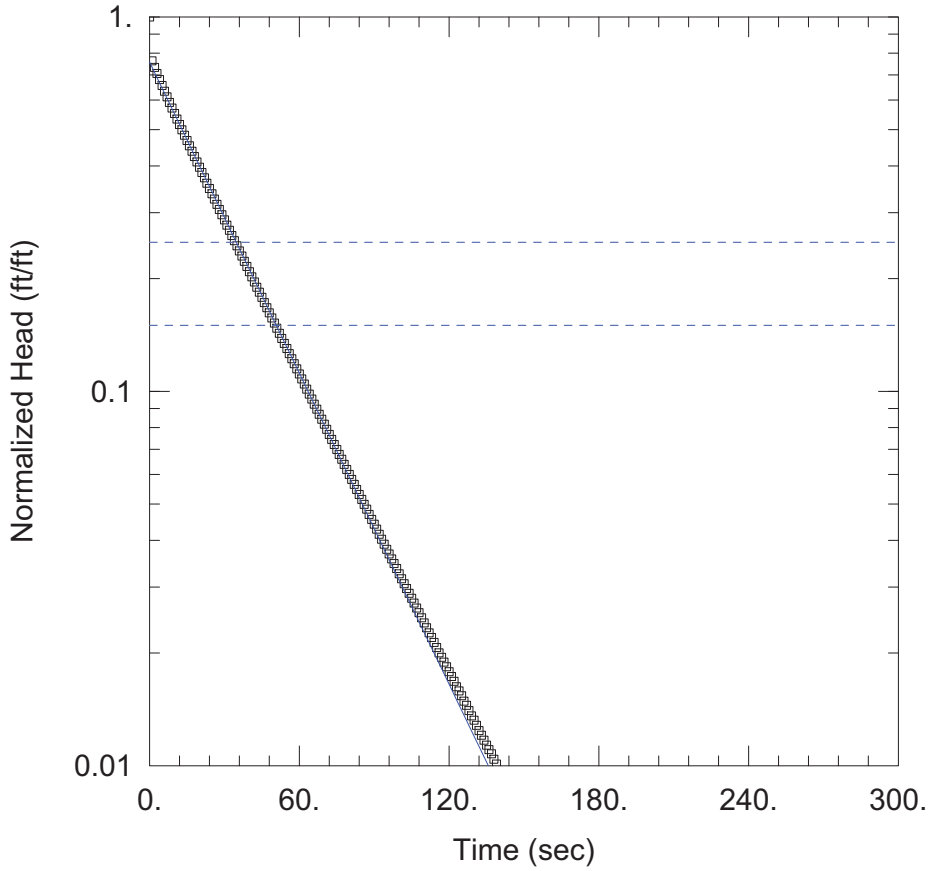

MW-49-66 PNEUMATIC SLUG (TEST2)

Data Set: J:\...\MW-49-65 T2.aqt
Date: 07/01/07 Time: 18:03:57

PROJECT INFORMATION

Company: GZA GeoEnvironmental
Client: Indian Point Energy Center
Project: 41.0017869.10
Location: Buchanan, New York
Test Well: MW-49-66
Test Date: 5/4/07

AQUIFER DATA

Saturated Thickness: 300. ft Anisotropy Ratio (Kz/Kr): 0.1

WELL DATA (MW-49-66 T2)

Initial Displacement: 39.39 ft Static Water Column Height: 52.32 ft
Total Well Penetration Depth: 52.32 ft Screen Length: 10. ft
Casing Radius: 0.08333 ft Wellbore Radius: 0.159 ft

SOLUTION

Aquifer Model: Unconfined Solution Method: Hvorslev

K = 5.063 ft/day y0 = 29.85 ft

Estimate Transmissivity from Specific Capcity Data

$R := 0.159$ Radius of Well (FT.)

$S := 0.01$ Storage Coefficient, Assumed

$t := \frac{30}{1440}$ Pumping Duration (Days.)

$T := 100$ Transmissivity (GPD/FT) *Initial Guess*

$Qp := 1.25$ Pumping Rate (GPM)

$s := 2.03$ Drawdown (FT.)

$\frac{Qp}{s} = 0.616$ Specific Capcity (GPM/FT)

$$aT := \text{root}\left(\frac{Qp}{s} - \frac{T}{264 \cdot \log\left(\frac{0.3 \cdot T \cdot t}{R^2 \cdot S}\right)}, T\right)$$

Groundwater Resource Evaluation
William C. Walton Mc-Graw-hill 1970

$T := aT$

$T = 688$ Computed Transmissivity (GPD/ Ft)

$Tft := \frac{T}{7.48}$

$Tft = 92$ **Computed Transmissivity (Sq.ft./Day)**

Estimate Transmissivity from Specific Capcity Data

$R := 0.159$ Radius of Well (FT.)

$S := 0.001$ Storage Coefficient, Assumed

$t := \frac{30}{1440}$ Pumping Duration (Days.)

$T := 100$ Transmissivity (GPD/FT) *Initial Guess*

$Qp := 0.03$ Pumping Rate (GPM)

$s := 4.46$ Drawdown (FT.)

$\frac{Qp}{s} = 6.726 \cdot 10^{-3}$ Specific Capcity (GPM/FT)

$$aT := \text{root}\left(\frac{Qp}{s} - \frac{T}{264 \cdot \log\left(\frac{0.3 \cdot T \cdot t}{R^2 \cdot S}\right)}, T\right)$$

Groundwater Resource Evaluation
William C. Walton Mc-Graw-hill 1970

$T := aT$

$T = 6$ Computed Transmissivity (GPD/ Ft)

$Tft := \frac{T}{7.48}$

$Tft = 1$ **Computed Transmissivity (Sq.ft./Day)**

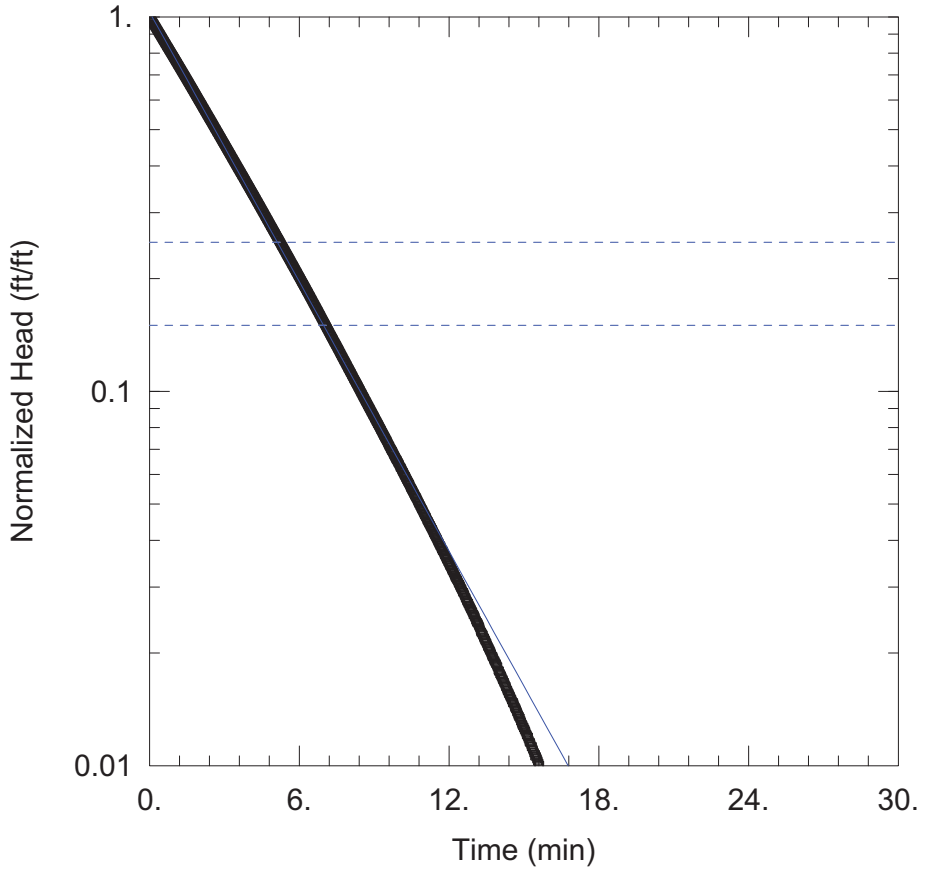

MW50-67 SLUG TEST

Data Set: J:\...\MW50-67.aqt
Date: 09/12/07 Time: 14:09:38

PROJECT INFORMATION

Company: GZA GeoEnvironmental
Client: Indian Point Energy Center
Project: 41.0017869.10
Location: Buchanan, New York
Test Well: MW50-67
Test Date: 1/2/07

AQUIFER DATA

Saturated Thickness: 300. ft Anisotropy Ratio (Kz/Kr): 0.1

WELL DATA (MW-50-67)

Initial Displacement: 14.87 ft Static Water Column Height: 67. ft
Total Well Penetration Depth: 67. ft Screen Length: 7. ft
Casing Radius: 0.04167 ft Wellbore Radius: 0.159 ft

SOLUTION

Aquifer Model: Unconfined Solution Method: Hvorslev

K = 0.2436 ft/day y0 = 15.32 ft

Estimate Transmissivity from Specific Capcity Data

$R := 0.159$ Radius of Well (FT.)

$S := 0.001$ Storage Coefficient, Assumed

$t := \frac{70}{1440}$ Pumping Duration (Days.)

$T := 100$ Transmissivity (GPD/FT) *Initial Guess*

$Qp := 1.0$ Pumping Rate (GPM)

$s := 16$ Drawdown (FT.)

$\frac{Qp}{s} = 0.063$ Specific Capcity (GPM/FT)

$$aT := \text{root}\left(\frac{Qp}{s} - \frac{T}{264 \cdot \log\left(\frac{0.3 \cdot T \cdot t}{R^2 \cdot S}\right)}, T\right)$$

Groundwater Resource Evaluation
William C. Walton Mc-Graw-hill 1970

$T := aT$

$T = 77$ Computed Transmissivity (GPD/ Ft)

$Tft := \frac{T}{7.48}$

$Tft = 10$ **Computed Transmissivity (Sq.ft./Day)**

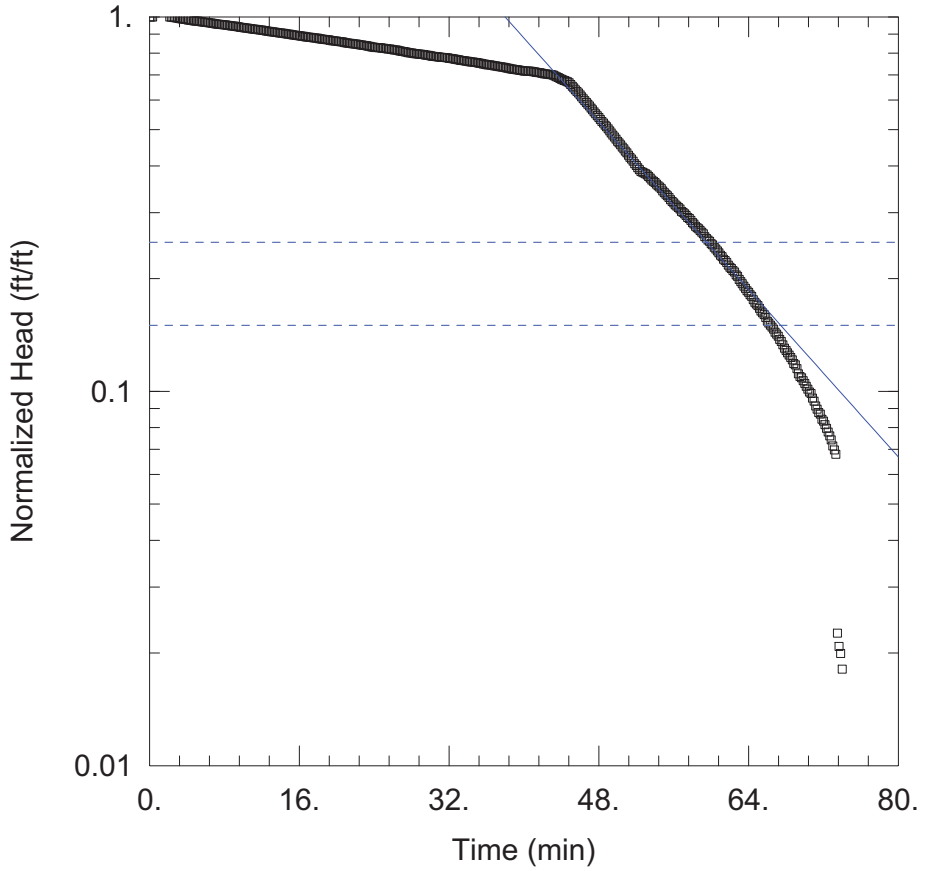

MW-51 TEST 15

Data Set: J:\...\MW-51 t15.aqt
Date: 09/10/07 Time: 17:01:40

PROJECT INFORMATION

Company: GZA GeoEnvironmental
Client: Indian Point Energy Center
Project: 41.0017869.10
Location: Buchanan, New York
Test Well: MW-51 (38.7-29)
Test Date: 5/24/06

AQUIFER DATA

Saturated Thickness: 300. ft Anisotropy Ratio (Kz/Kr): 0.1

WELL DATA (MW-51 T15)

Initial Displacement: 15.8 ft Static Water Column Height: 11.41 ft
Total Well Penetration Depth: 11.41 ft Screen Length: 10. ft
Casing Radius: 0.08333 ft Wellbore Radius: 0.159 ft

SOLUTION

Aquifer Model: Unconfined Solution Method: Hvorslev

K = 0.1704 ft/day y0 = 182.4 ft

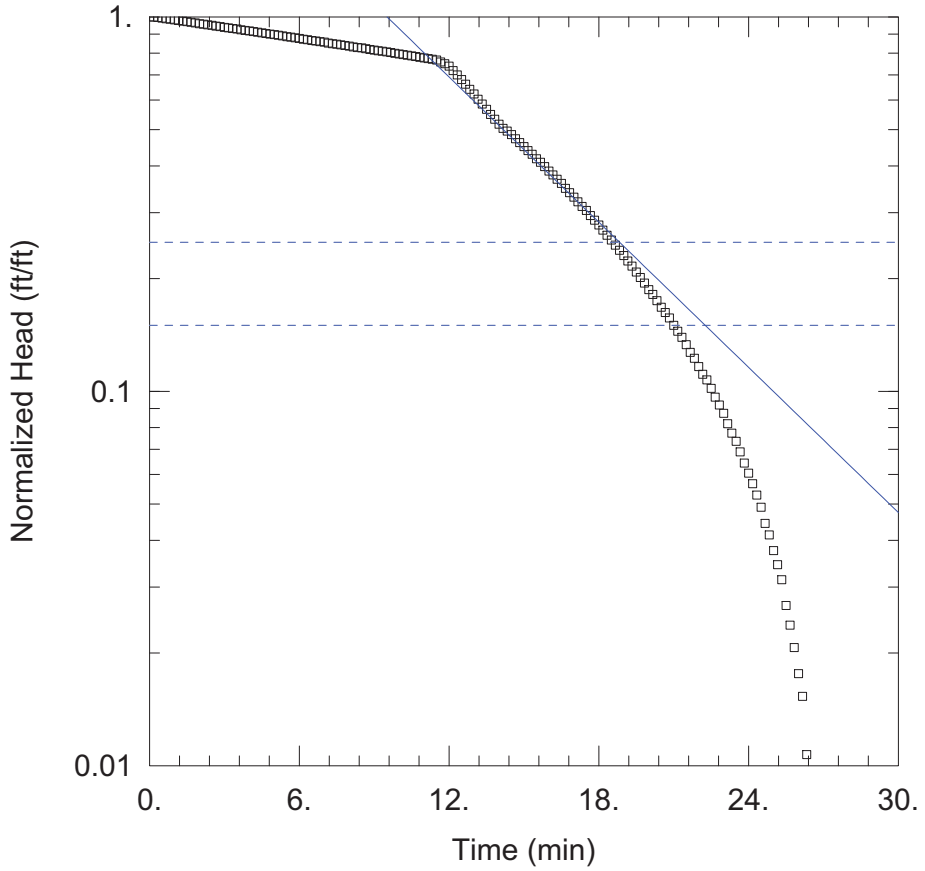

MW-51 TEST 14

Data Set: J:\...\MW-51 t14.aqt
Date: 09/10/07 Time: 17:01:57

PROJECT INFORMATION

Company: GZA GeoEnvironmental
Client: Indian Point Energy Center
Project: 41.0017869.10
Location: Buchanan, New York
Test Well: MW-51 (49.2-39.5)
Test Date: 5/24/06

AQUIFER DATA

Saturated Thickness: 300. ft Anisotropy Ratio (Kz/Kr): 0.1

WELL DATA (MW-51 T14)

Initial Displacement: 18.67 ft Static Water Column Height: 21.98 ft
Total Well Penetration Depth: 21.98 ft Screen Length: 10. ft
Casing Radius: 0.08333 ft Wellbore Radius: 0.159 ft

SOLUTION

Aquifer Model: Unconfined Solution Method: Hvorslev

K = 0.3938 ft/day y0 = 76.94 ft

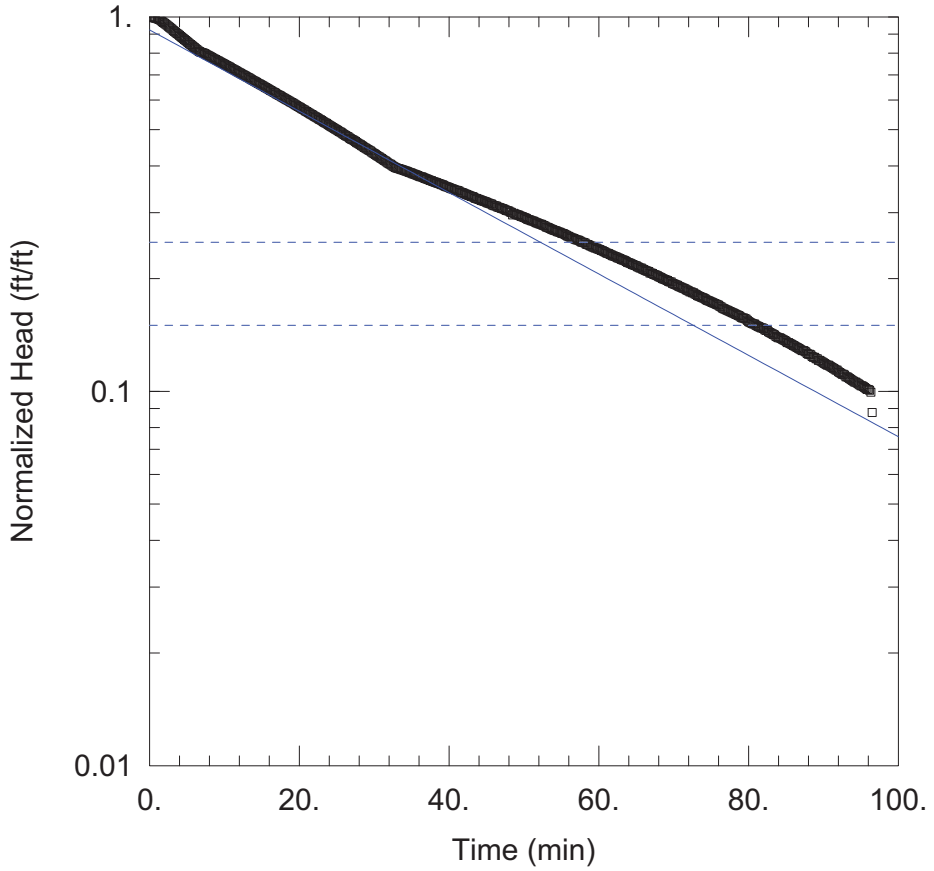

MW-51 TEST 13

Data Set: J:\...\MW-51 t13.aqt
Date: 09/10/07 Time: 17:02:09

PROJECT INFORMATION

Company: GZA GeoEnvironmental
Client: Indian Point Energy Center
Project: 41.0017869.10
Location: Buchanan, New York
Test Well: MW-51 (59.7-50)
Test Date: 5/24/06

AQUIFER DATA

Saturated Thickness: 300. ft Anisotropy Ratio (Kz/Kr): 0.1

WELL DATA (MW-51 T13)

Initial Displacement: 24.59 ft Static Water Column Height: 32.34 ft
Total Well Penetration Depth: 32.34 ft Screen Length: 10. ft
Casing Radius: 0.08333 ft Wellbore Radius: 0.159 ft

SOLUTION

Aquifer Model: Unconfined Solution Method: Hvorslev

K = 0.06621 ft/day y0 = 22.71 ft

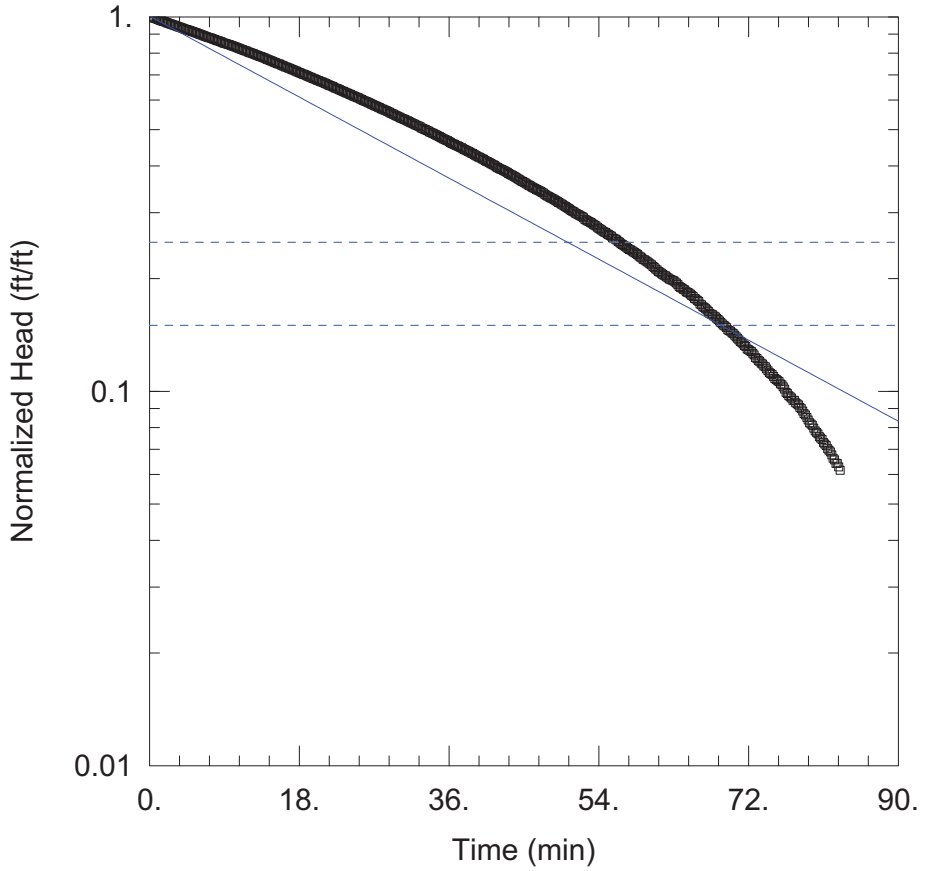

MW-51 TEST 12

Data Set: J:\...\MW-51 t12.aqt
Date: 09/10/07 Time: 17:24:02

PROJECT INFORMATION

Company: GZA GeoEnvironmental
Client: Indian Point Energy Center
Project: 41.0017869.10
Location: Buchanan, New York
Test Well: MW-51 (87.5-77.8)
Test Date: 5/23/06

AQUIFER DATA

Saturated Thickness: 300. ft Anisotropy Ratio (Kz/Kr): 0.1

WELL DATA (MW-51 T12)

Initial Displacement: 21.17 ft Static Water Column Height: 46.97 ft
Total Well Penetration Depth: 46.97 ft Screen Length: 10. ft
Casing Radius: 0.08333 ft Wellbore Radius: 0.159 ft

SOLUTION

Aquifer Model: Unconfined Solution Method: Hvorslev

K = 0.07326 ft/day y0 = 21.28 ft

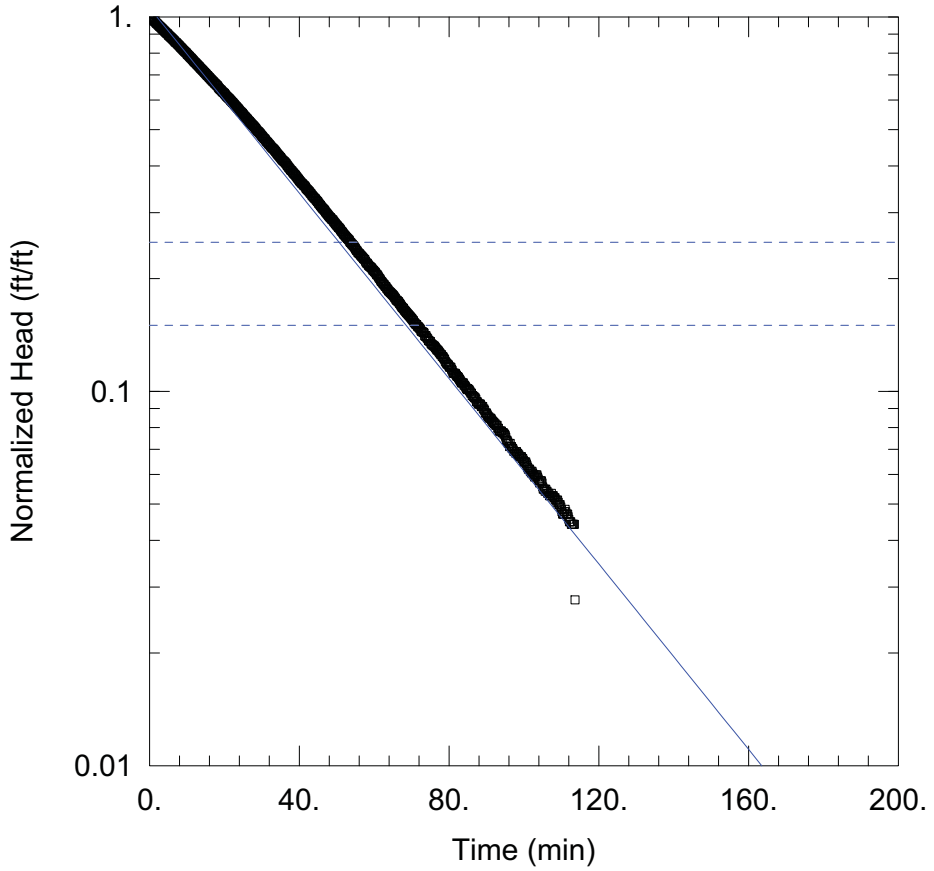

MW-51 TEST 11

Data Set: J:\...\MW-51 t11.aqt
Date: 04/19/07 Time: 16:11:37

PROJECT INFORMATION

Company: GZA GeoEnvironmental
Client: Indian Point Energy Center
Project: 41.0017869.10
Location: Buchanan, New York
Test Well: MW-51 (87.5-77.8)
Test Date: 5/23/06

AQUIFER DATA

Saturated Thickness: 300. ft Anisotropy Ratio (Kz/Kr): 0.1

WELL DATA (MW-51 T11)

Initial Displacement: 20.12 ft Static Water Column Height: 60.29 ft
Total Well Penetration Depth: 60.29 ft Screen Length: 10. ft
Casing Radius: 0.08333 ft Wellbore Radius: 0.159 ft

SOLUTION

Aquifer Model: Unconfined Solution Method: Hvorslev

K = 0.07544 ft/day y0 = 21.29 ft

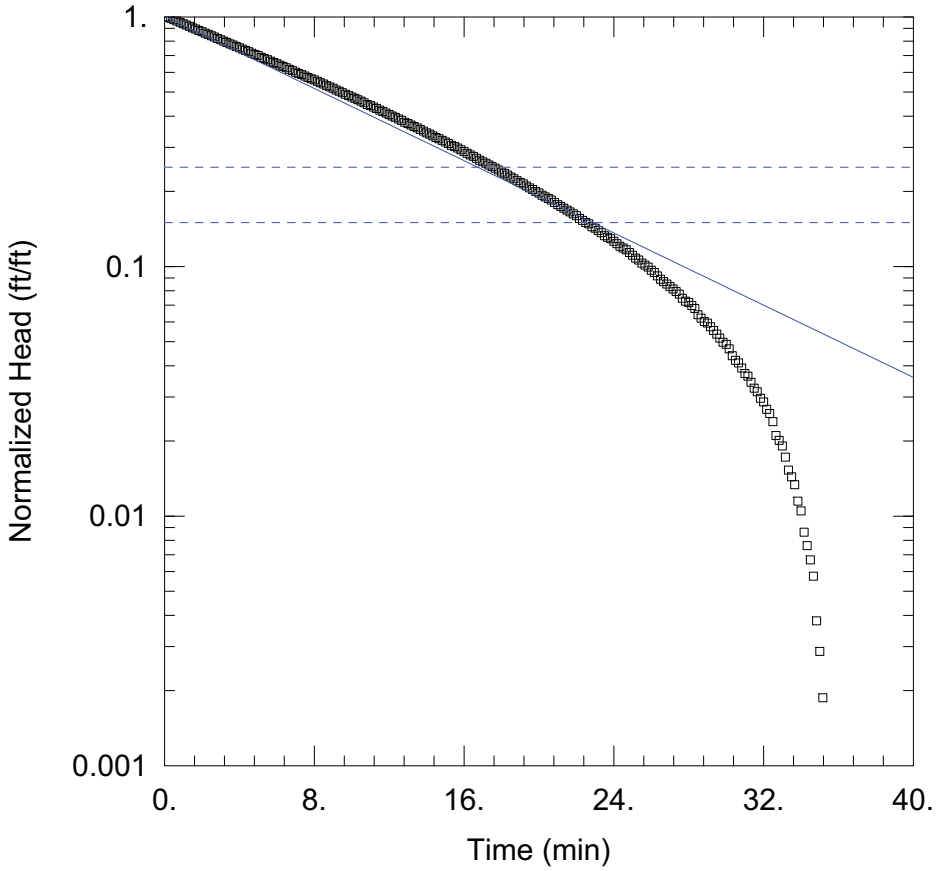

MW-51 TEST 10

Data Set: J:\...\MW-51 t10.aqt
Date: 04/19/07 Time: 16:11:14

PROJECT INFORMATION

Company: GZA GeoEnvironmental
Client: Indian Point Energy Center
Project: 41.0017869.10
Location: Buchanan, New York
Test Well: MW-51 (98.5-88.8)
Test Date: 5/23/06

AQUIFER DATA

Saturated Thickness: 300. ft Anisotropy Ratio (Kz/Kr): 0.1

WELL DATA (MW-51 T10)

Initial Displacement: 14.97 ft Static Water Column Height: 71.42 ft
Total Well Penetration Depth: 71.42 ft Screen Length: 10. ft
Casing Radius: 0.08333 ft Wellbore Radius: 0.159 ft

SOLUTION

Aquifer Model: Unconfined Solution Method: Hvorslev

K = 0.2204 ft/day y0 = 15.07 ft

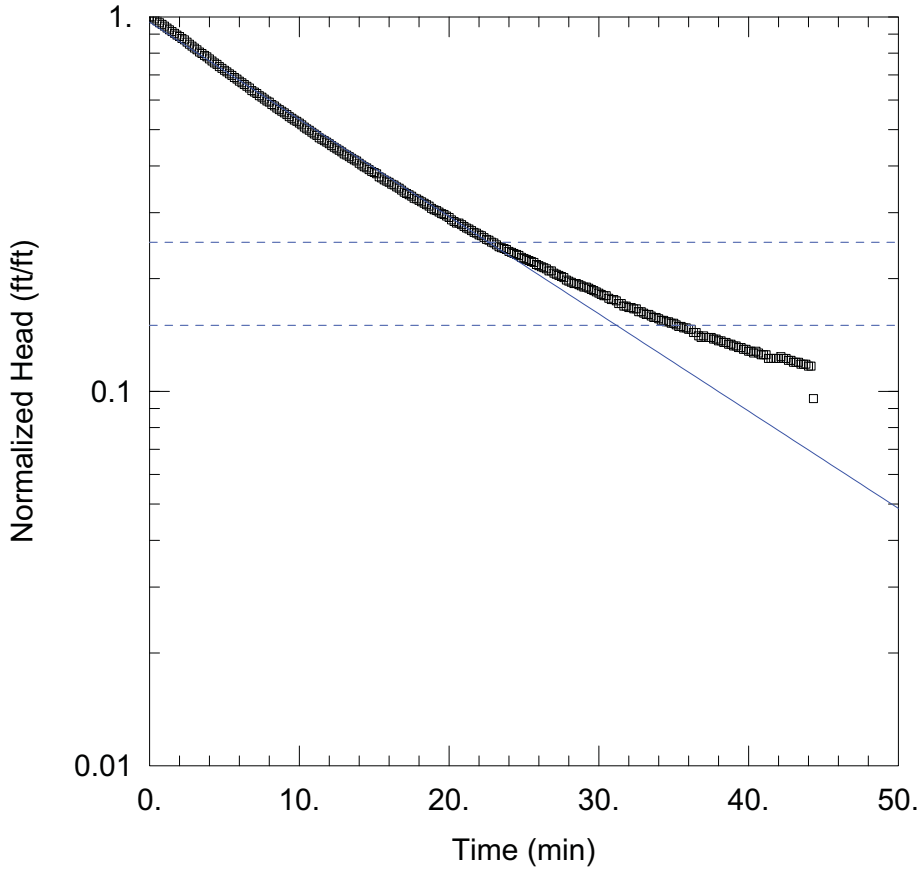

MW-51 TEST 9

Data Set: J:\...\MW-51 t9.aqt
Date: 04/19/07 Time: 16:10:44

PROJECT INFORMATION

Company: GZA GeoEnvironmental
Client: Indian Point Energy Center
Project: 41.0017869.10
Location: Buchanan, New York
Test Well: MW-51 (109.7-100)
Test Date: 5/22/06

AQUIFER DATA

Saturated Thickness: 300. ft Anisotropy Ratio (Kz/Kr): 0.1

WELL DATA (MW-51 Test 9)

Initial Displacement: 10.18 ft Static Water Column Height: 82.03 ft
Total Well Penetration Depth: 82.03 ft Screen Length: 10. ft
Casing Radius: 0.08333 ft Wellbore Radius: 0.159 ft

SOLUTION

Aquifer Model: Unconfined Solution Method: Hvorslev

K = 0.1583 ft/day y0 = 9.864 ft

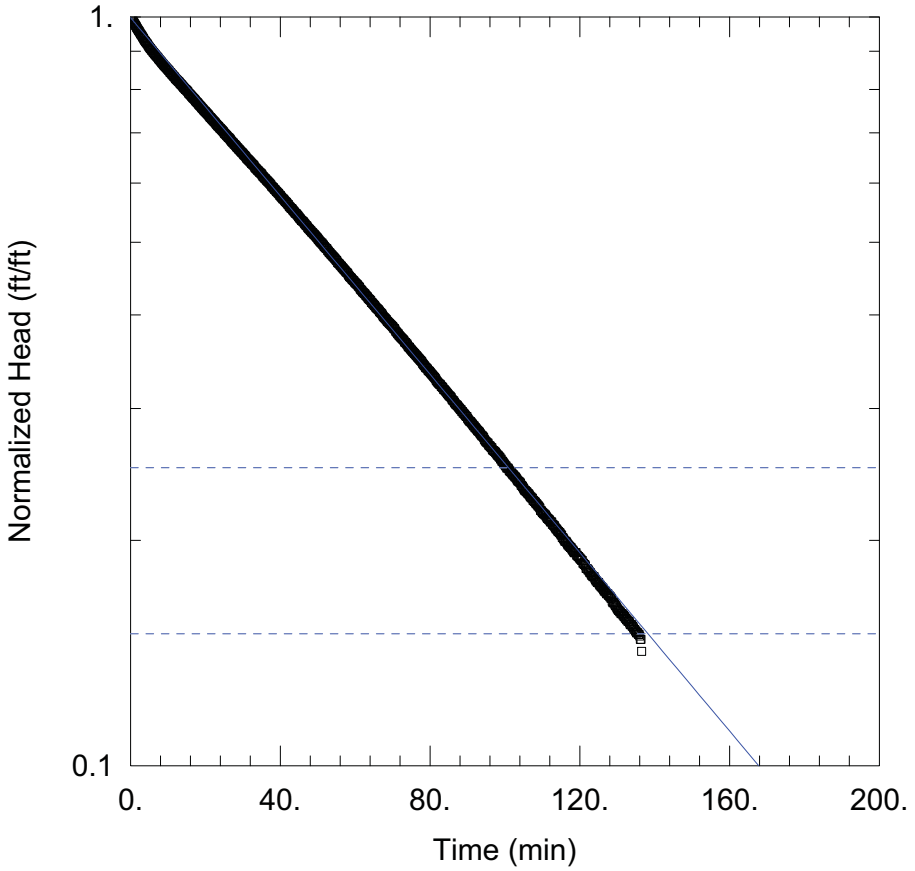

MW-51 TEST 8

Data Set: J:\...\MW-51 t8.aqt
Date: 04/19/07 Time: 16:10:02

PROJECT INFORMATION

Company: GZA GeoEnvironmental
Client: Indian Point Energy Center
Project: 41.0017869.10
Location: Buchanan, New York
Test Well: MW-51 (119-109.3)
Test Date: 5/22/06

AQUIFER DATA

Saturated Thickness: 300. ft Anisotropy Ratio (Kz/Kr): 0.1

WELL DATA (MW-51 Test 8)

Initial Displacement: 18.75 ft Static Water Column Height: 90.94 ft
Total Well Penetration Depth: 90.94 ft Screen Length: 10. ft
Casing Radius: 0.08333 ft Wellbore Radius: 0.159 ft

SOLUTION

Aquifer Model: Unconfined Solution Method: Hvorslev

K = 0.03628 ft/day y0 = 18.71 ft

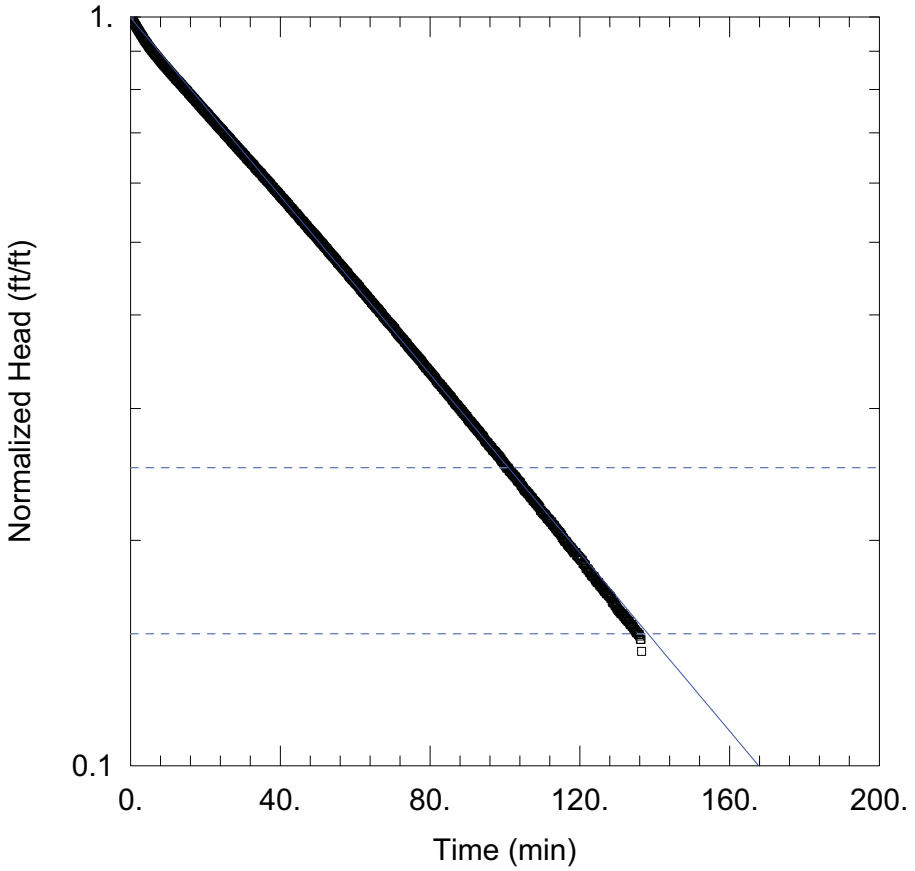

MW-51 TEST 7

Data Set: J:\...\MW-51 t7.aqt
Date: 04/19/07 Time: 16:09:22

PROJECT INFORMATION

Company: GZA GeoEnvironmental
Client: Indian Point Energy Center
Project: 41.0017869.10
Location: Buchanan, New York
Test Well: MW-51 (130.1-120.4)
Test Date: 5/22/06

AQUIFER DATA

Saturated Thickness: 300. ft Anisotropy Ratio (Kz/Kr): 0.1

WELL DATA (MW-51 Test 7)

Initial Displacement: 18.75 ft Static Water Column Height: 103.2 ft
Total Well Penetration Depth: 103.2 ft Screen Length: 10. ft
Casing Radius: 0.08333 ft Wellbore Radius: 0.159 ft

SOLUTION

Aquifer Model: Unconfined Solution Method: Hvorslev

K = 0.03628 ft/day y0 = 18.71 ft

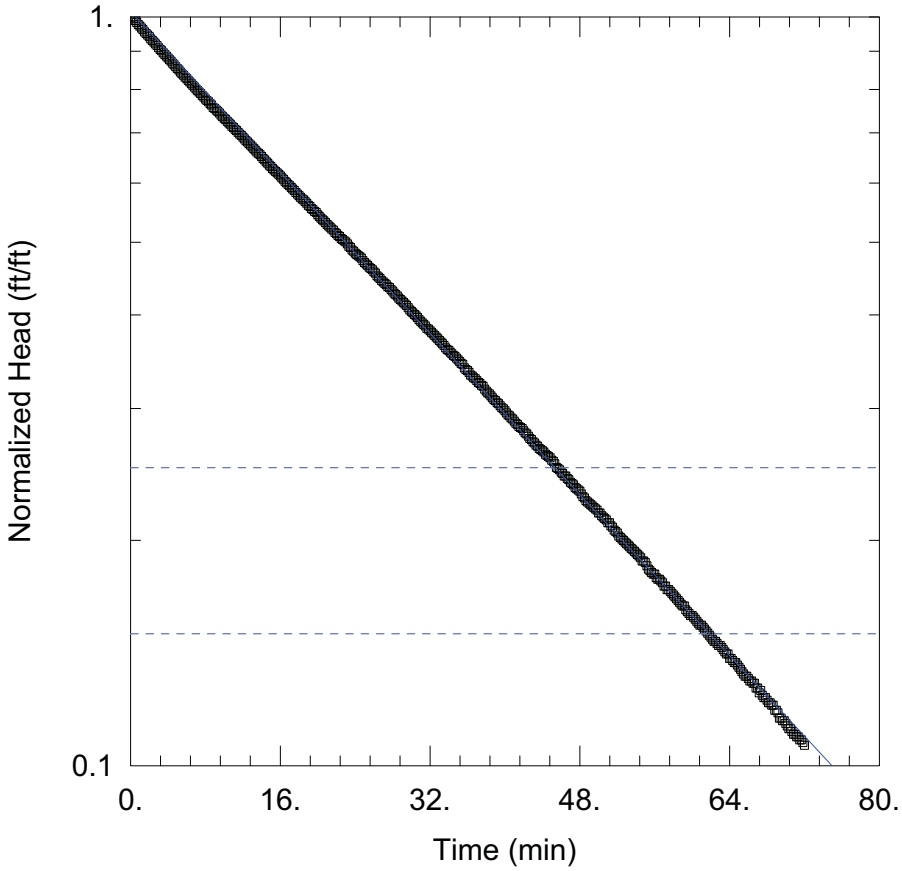

MW-51 TEST 6

Data Set: J:\...\MW-51 t6.aqt
Date: 04/19/07 Time: 16:08:53

PROJECT INFORMATION

Company: GZA GeoEnvironmental
Client: Indian Point Energy Center
Project: 41.0017869.10
Location: Buchanan, New York
Test Well: MW-51 (141.2-131.5)
Test Date: 5/19/06

AQUIFER DATA

Saturated Thickness: 300. ft Anisotropy Ratio (Kz/Kr): 0.1

WELL DATA (MW-51 Test 6)

Initial Displacement: 15.35 ft Static Water Column Height: 113.1 ft
Total Well Penetration Depth: 113.1 ft Screen Length: 10. ft
Casing Radius: 0.08333 ft Wellbore Radius: 0.159 ft

SOLUTION

Aquifer Model: Unconfined Solution Method: Hvorslev

K = 0.08191 ft/day y0 = 15.62 ft

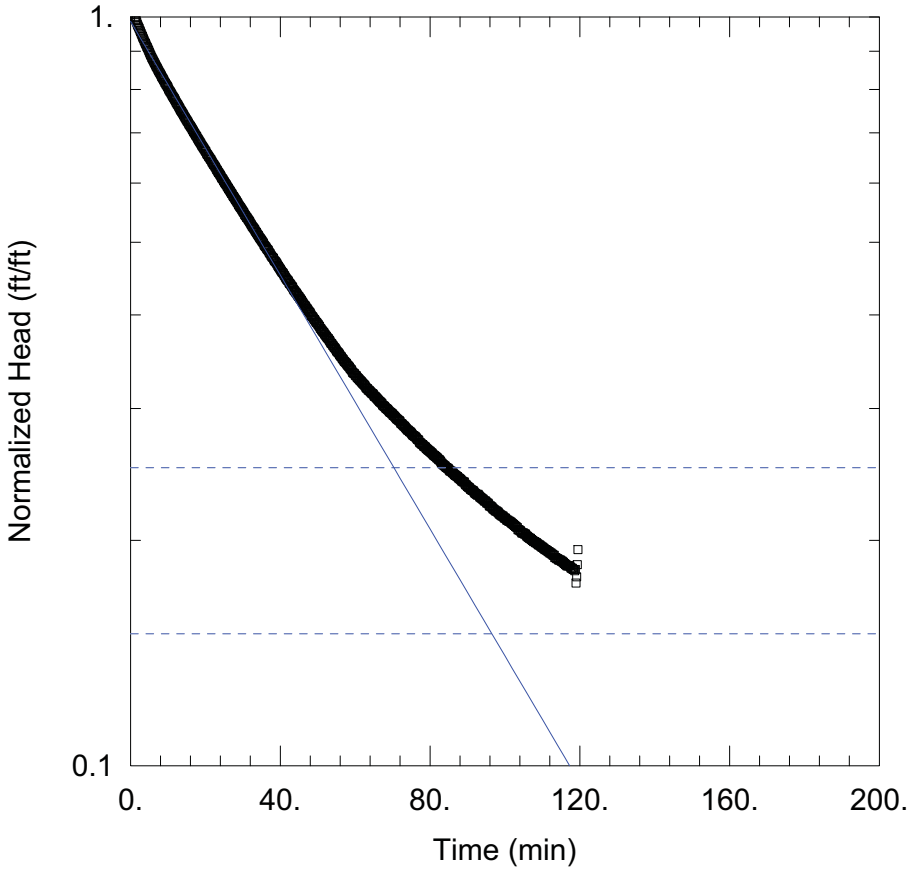

MW-51 TEST 5

Data Set: J:\...\MW-51 t5.aqt
Date: 04/19/07 Time: 16:08:06

PROJECT INFORMATION

Company: GZA GeoEnvironmental
Client: Indian Point Energy Center
Project: 41.0017869.10
Location: Buchanan, New York
Test Well: MW-51 (153.1-143.4)
Test Date: 5/19/06

AQUIFER DATA

Saturated Thickness: 300. ft Anisotropy Ratio (Kz/Kr): 0.1

WELL DATA (MW-51 Test 5)

Initial Displacement: 21.09 ft Static Water Column Height: 125.8 ft
Total Well Penetration Depth: 125.8 ft Screen Length: 10. ft
Casing Radius: 0.08333 ft Wellbore Radius: 0.159 ft

SOLUTION

Aquifer Model: Unconfined Solution Method: Hvorslev

K = 0.05165 ft/day y0 = 20.81 ft

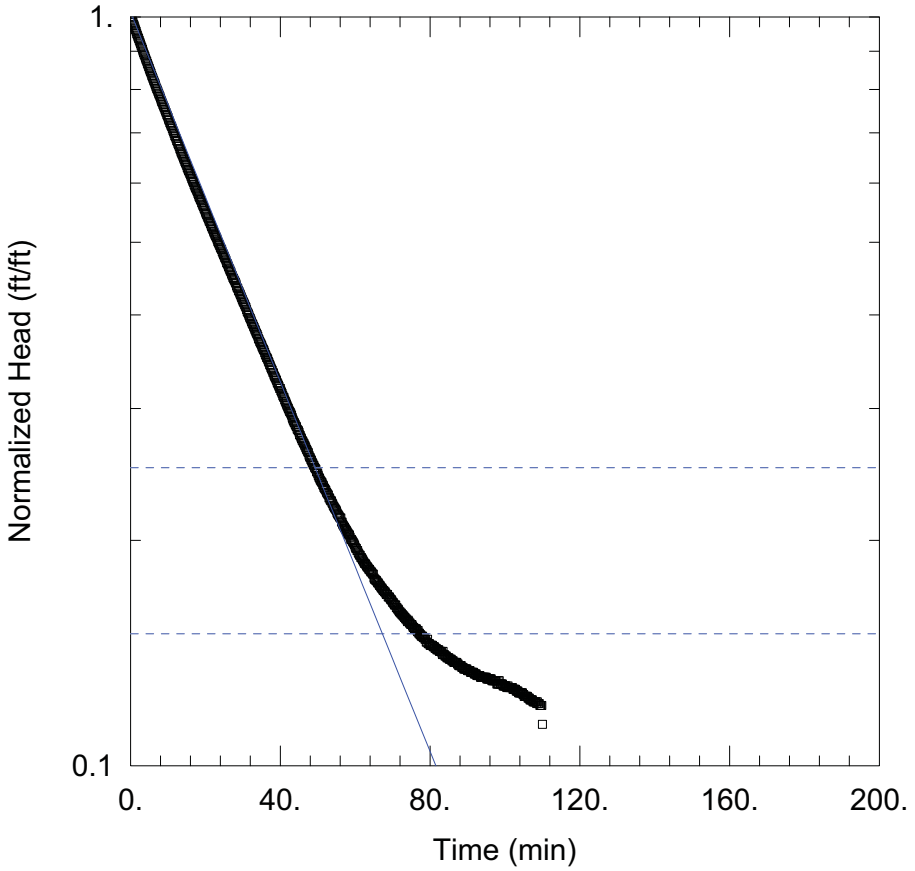

MW-51 TEST 4

Data Set: J:\...\MW-51 t4.aqt
Date: 04/19/07 Time: 16:07:12

PROJECT INFORMATION

Company: GZA GeoEnvironmental
Client: Indian Point Energy Center
Project: 41.0017869.10
Location: Buchanan, New York
Test Well: MW-51 (163.6-153.9)
Test Date: 5/19/06

AQUIFER DATA

Saturated Thickness: 300. ft Anisotropy Ratio (Kz/Kr): 0.1

WELL DATA (MW-51 Test 4)

Initial Displacement: 21.09 ft Static Water Column Height: 136.6 ft
Total Well Penetration Depth: 136.6 ft Screen Length: 10. ft
Casing Radius: 0.08333 ft Wellbore Radius: 0.159 ft

SOLUTION

Aquifer Model: Unconfined Solution Method: Hvorslev

K = 0.0752 ft/day y0 = 21.4 ft

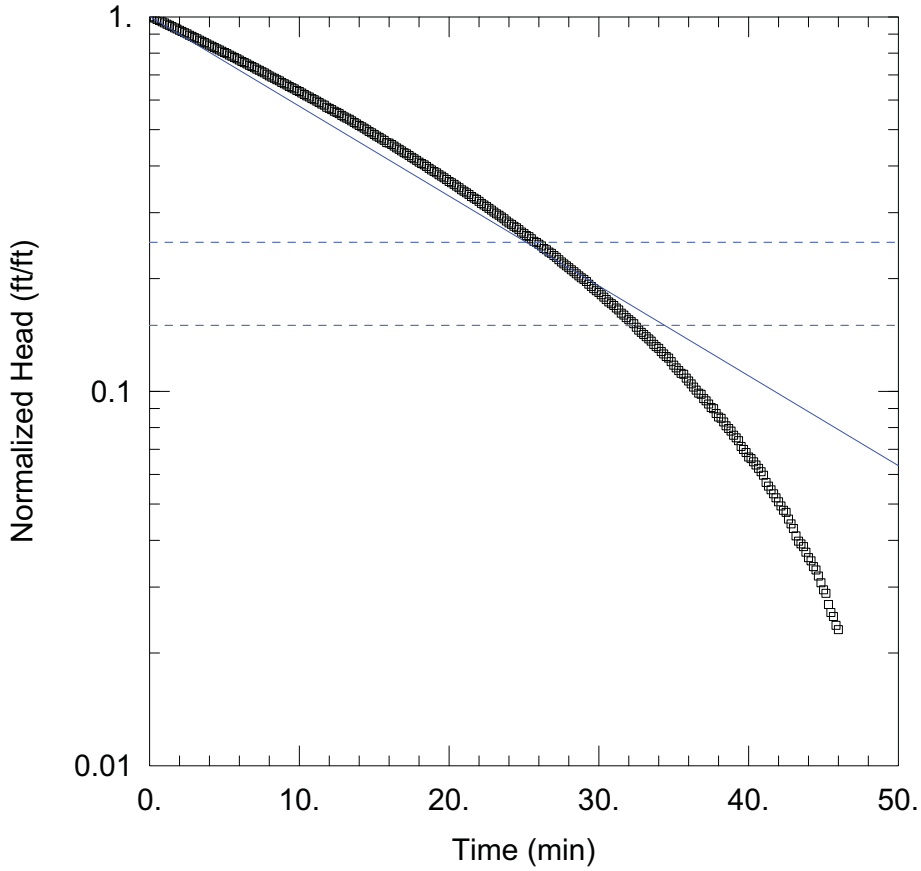

MW-51 TEST 3

Data Set: J:\...\MW-51 t3.aqt
Date: 04/26/07 Time: 23:13:22

PROJECT INFORMATION

Company: GZA GeoEnvironmental
Client: Indian Point Energy Center
Project: 41.0017869.10
Location: Buchanan, New York
Test Well: MW-51 (167.5-157.8)
Test Date: 5/18/06

AQUIFER DATA

Saturated Thickness: 300. ft Anisotropy Ratio (Kz/Kr): 0.1

WELL DATA (MW-51 Test 3)

Initial Displacement: 22.34 ft Static Water Column Height: 139.3 ft
Total Well Penetration Depth: 139.3 ft Screen Length: 10. ft
Casing Radius: 0.08333 ft Wellbore Radius: 0.159 ft

SOLUTION

Aquifer Model: Unconfined Solution Method: Hvorslev

K = 0.1463 ft/day y0 = 22.43 ft

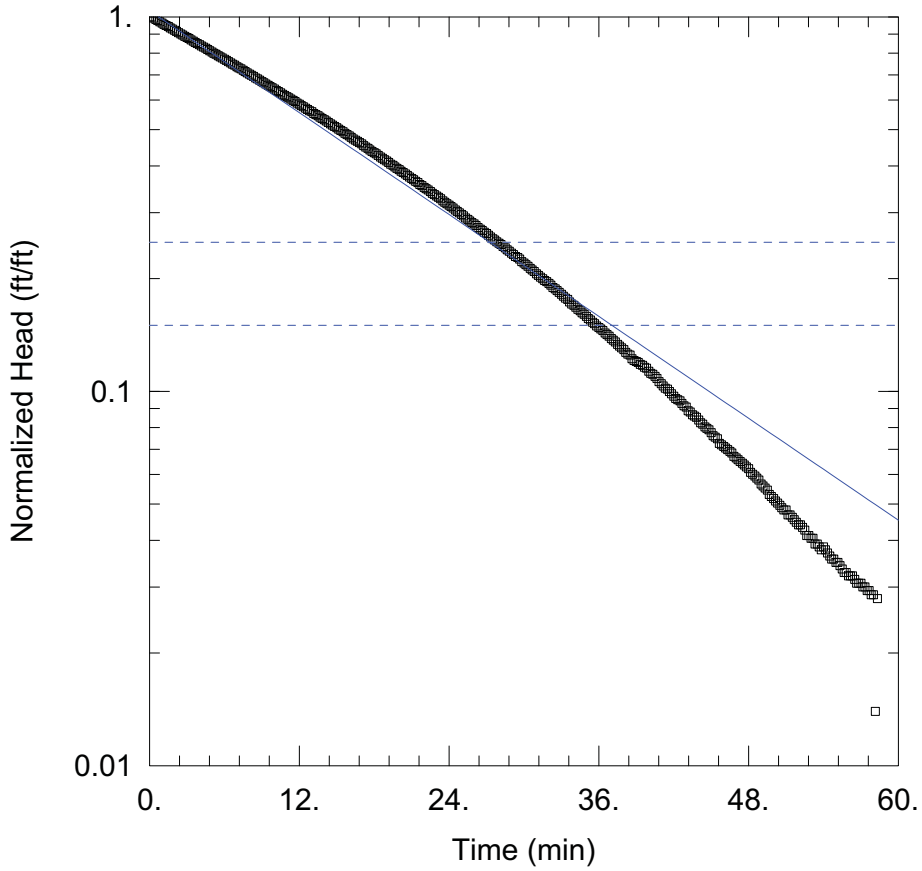

MW-51 TEST 2

Data Set: J:\...\MW-51 t2.aqt
Date: 04/19/07 Time: 16:06:24

PROJECT INFORMATION

Company: GZA GeoEnvironmental
Client: Indian Point Energy Center
Project: 41.0017869.10
Location: Buchanan, New York
Test Well: MW-51 (173.3-183.0)
Test Date: 5/18/06

AQUIFER DATA

Saturated Thickness: 300. ft Anisotropy Ratio (Kz/Kr): 0.1

WELL DATA (MW-51 Test 2)

Initial Displacement: 20.54 ft Static Water Column Height: 156.1 ft
Total Well Penetration Depth: 156.1 ft Screen Length: 10. ft
Casing Radius: 0.08333 ft Wellbore Radius: 0.159 ft

SOLUTION

Aquifer Model: Unconfined Solution Method: Hvorslev

K = 0.1382 ft/day y0 = 21.34 ft

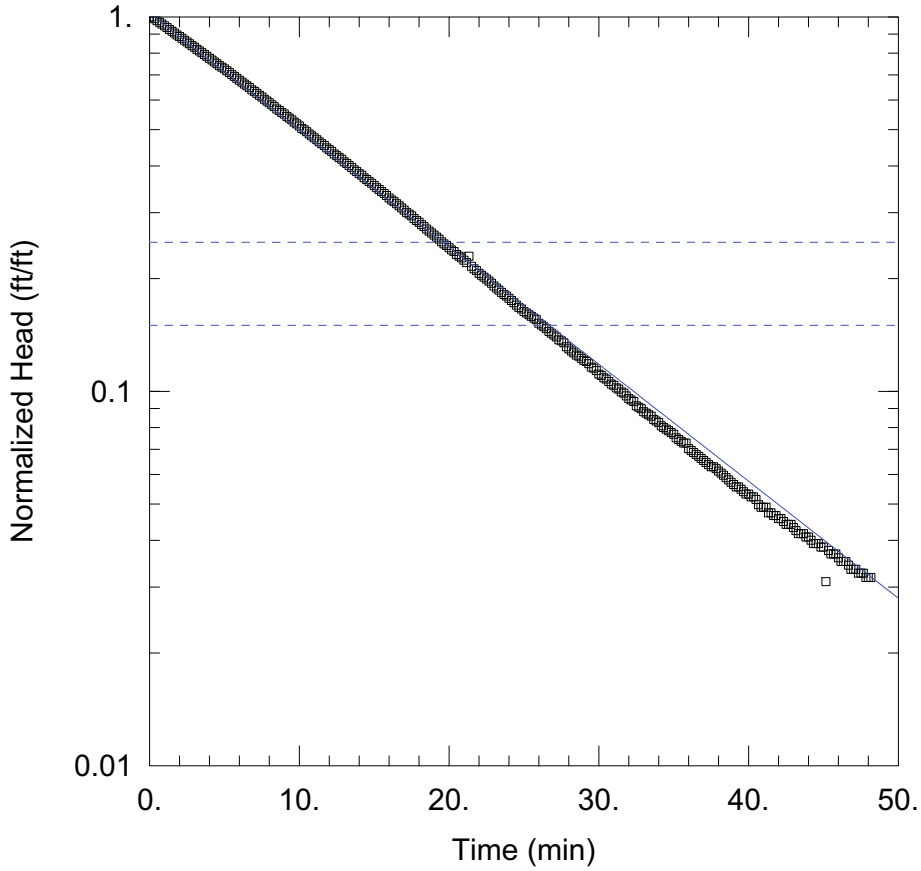

MW-51 TEST 1

Data Set: J:\...\MW-51 t1.aqt
Date: 04/19/07 Time: 16:05:25

PROJECT INFORMATION

Company: GZA GeoEnvironmental
Client: Indian Point Energy Center
Project: 41.0017869.10
Location: Buchanan, New York
Test Well: MW-51 (184.6-194.3)
Test Date: 5/18/06

AQUIFER DATA

Saturated Thickness: 300. ft Anisotropy Ratio (Kz/Kr): 0.1

WELL DATA (MW-51 Test 1)

Initial Displacement: 17.57 ft Static Water Column Height: 166.4 ft
Total Well Penetration Depth: 166.4 ft Screen Length: 10. ft
Casing Radius: 0.08333 ft Wellbore Radius: 0.159 ft

SOLUTION

Aquifer Model: Unconfined Solution Method: Hvorslev

K = 0.1904 ft/day y0 = 17.96 ft

Estimate Transmissivity from Specific Capcity Data

$R := 0.159$ Radius of Well (FT.)

$S := 0.001$ Storage Coefficient, Assumed

$t := \frac{30}{1440}$ Pumping Duration (Days.)

$T := 100$ Transmissivity (GPD/FT) *Initial Guess*

$Qp := 0.04$ Pumping Rate (GPM)

$s := 2.8$ Drawdown (FT.)

$\frac{Qp}{s} = 0.014$ Specific Capcity (GPM/FT)

$$aT := \text{root}\left(\frac{Qp}{s} - \frac{T}{264 \cdot \log\left(\frac{0.3 \cdot T \cdot t}{R^2 \cdot S}\right)}, T\right)$$

Groundwater Resource Evaluation
William C. Walton Mc-Graw-hill 1970

$T := aT$

$T = 13$ Computed Transmissivity (GPD/ Ft)

$Tft := \frac{T}{7.48}$

$Tft = 2$ **Computed Transmissivity (Sq.ft./Day)**

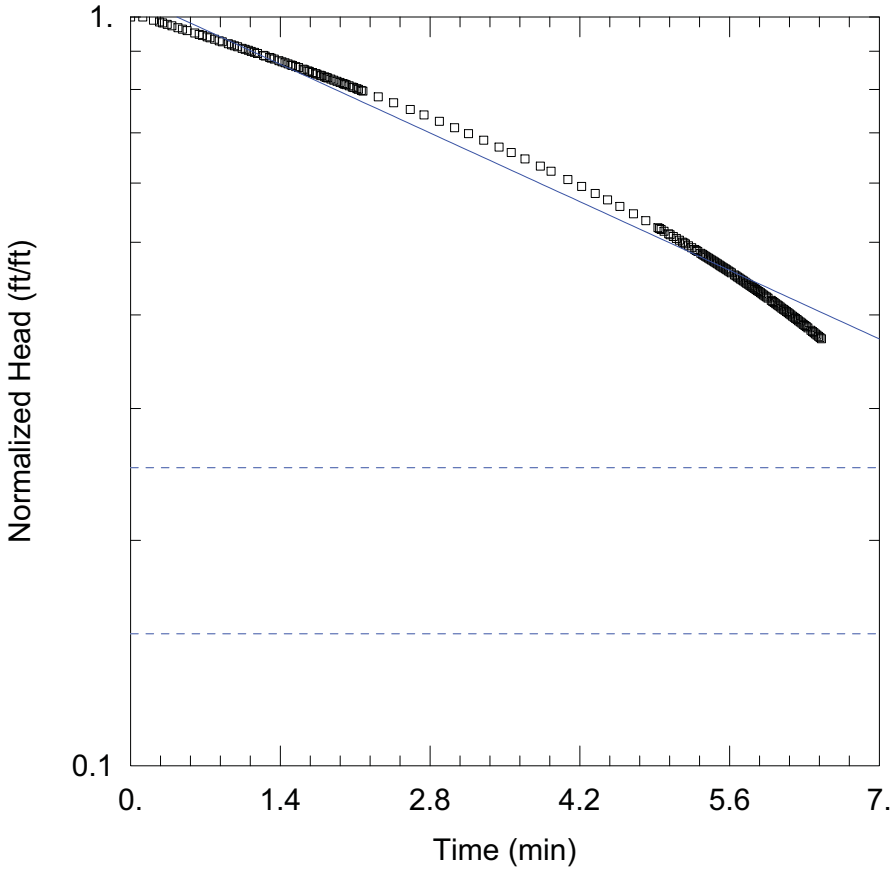

MW-52 TEST16

Data Set: J:\...\MW-52 t16.aqt
Date: 04/19/07 Time: 16:48:20

PROJECT INFORMATION

Company: GZA GeoEnvironmental
Client: Indian Point Energy Center
Project: 41.0017869.10
Location: Buchanan, New York
Test Well: MW-52 (12.5-22.2)
Test Date: 6/6/06

AQUIFER DATA

Saturated Thickness: 300. ft Anisotropy Ratio (Kz/Kr): 0.1

WELL DATA (MW-52 Test16)

Initial Displacement: 10.1 ft Static Water Column Height: 11.3 ft
Total Well Penetration Depth: 11.3 ft Screen Length: 10. ft
Casing Radius: 0.08333 ft Wellbore Radius: 0.159 ft

SOLUTION

Aquifer Model: Unconfined Solution Method: Hvorslev

K = 0.3991 ft/day y0 = 10.78 ft

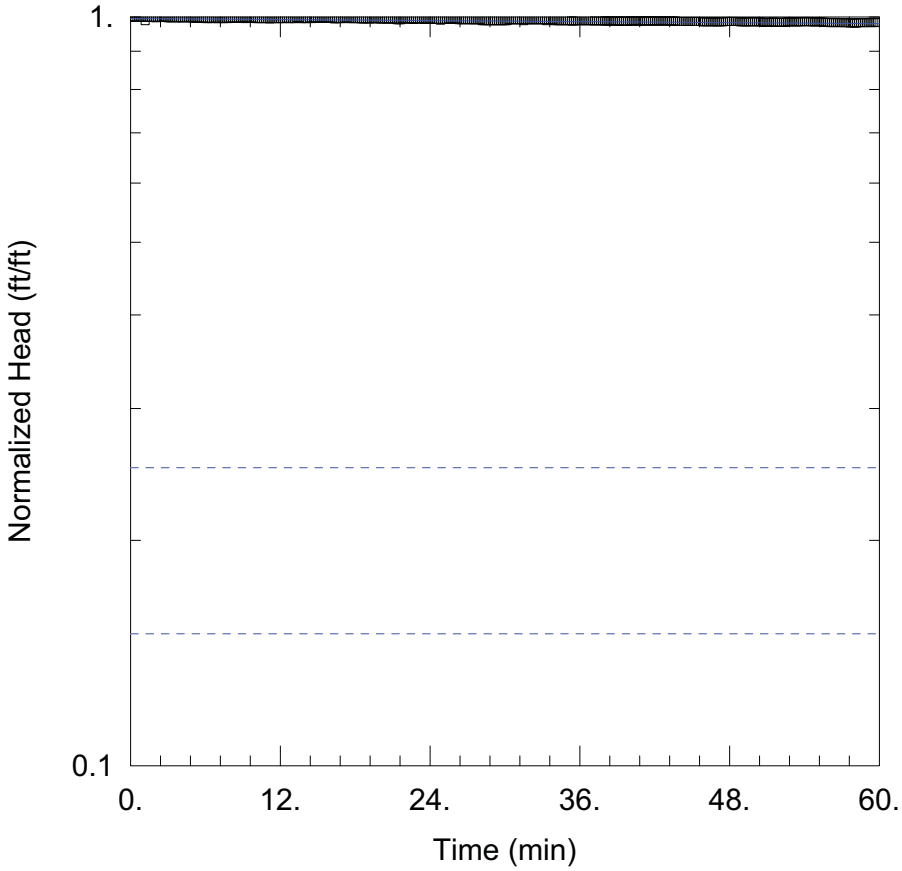

MW-52 TEST15

Data Set: J:\...\MW-52 t15.aqt
Date: 04/19/07 Time: 16:47:57

PROJECT INFORMATION

Company: GZA GeoEnvironmental
Client: Indian Point Energy Center
Project: 41.0017869.10
Location: Buchanan, New York
Test Well: MW-52 (18.5-28.2)
Test Date: 6/6/06

AQUIFER DATA

Saturated Thickness: 300. ft Anisotropy Ratio (Kz/Kr): 0.1

WELL DATA (MW-52 Test15)

Initial Displacement: 11.39 ft Static Water Column Height: 17.3 ft
Total Well Penetration Depth: 17.3 ft Screen Length: 10. ft
Casing Radius: 0.08333 ft Wellbore Radius: 0.159 ft

SOLUTION

Aquifer Model: Unconfined Solution Method: Hvorslev

K = 0.0006925 ft/day y0 = 11.34 ft

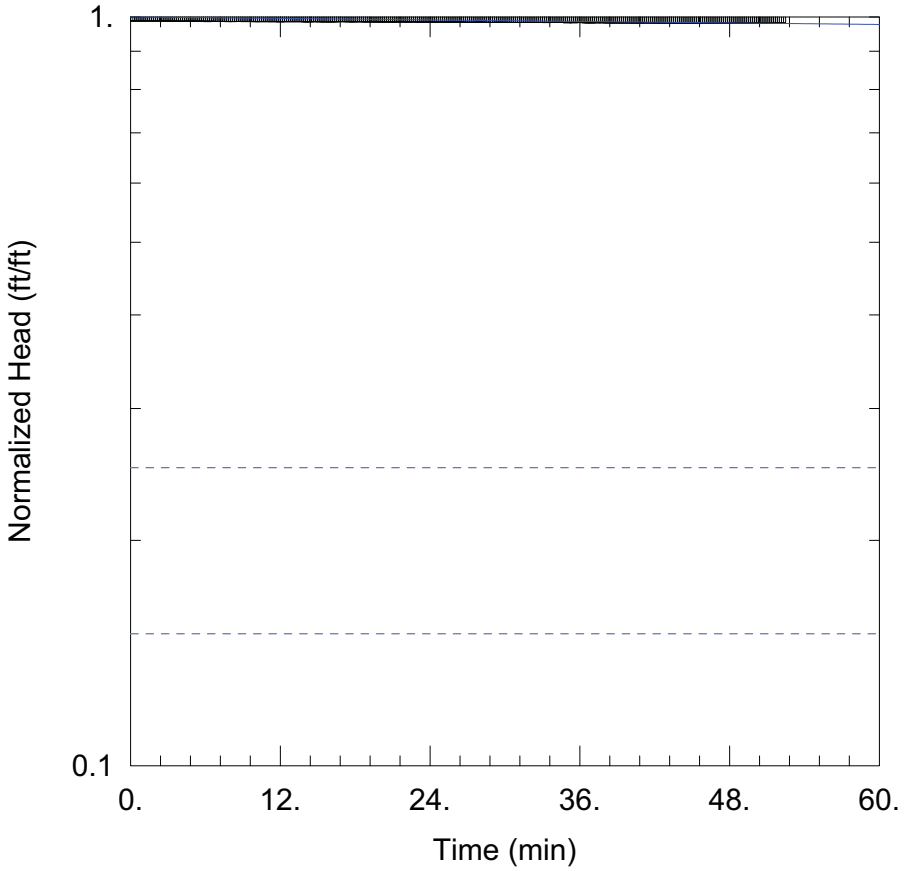

MW-52 TEST14

Data Set: J:\...\MW-52 t14.aqt
Date: 04/19/07 Time: 16:47:35

PROJECT INFORMATION

Company: GZA GeoEnvironmental
Client: Indian Point Energy Center
Project: 41.0017869.10
Location: Buchanan, New York
Test Well: MW-52 (28.2-37.9)
Test Date: 6/6/06

AQUIFER DATA

Saturated Thickness: 300. ft Anisotropy Ratio (Kz/Kr): 0.1

WELL DATA (MW-52 Test14)

Initial Displacement: 18.77 ft Static Water Column Height: 27. ft
Total Well Penetration Depth: 27. ft Screen Length: 10. ft
Casing Radius: 0.08333 ft Wellbore Radius: 0.159 ft

SOLUTION

Aquifer Model: Unconfined Solution Method: Hvorslev

K = 0.001021 ft/day y0 = 18.77 ft

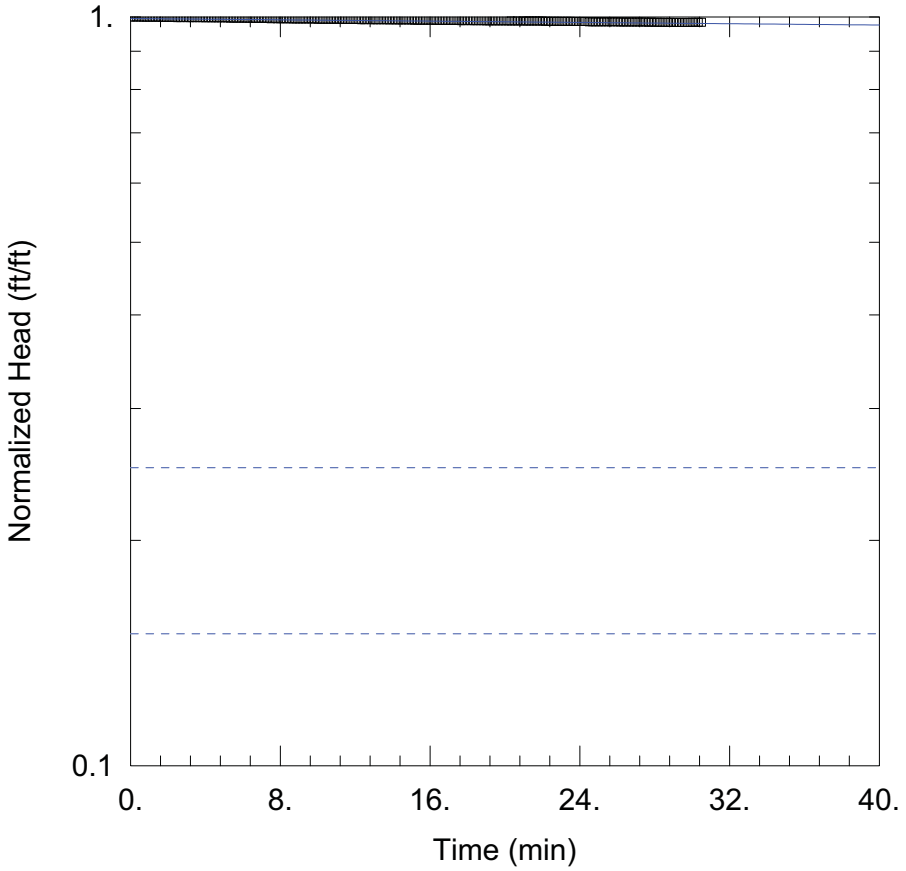

MW-52 TEST13

Data Set: J:\...\MW-52 t13.aqt
Date: 04/19/07 Time: 16:47:12

PROJECT INFORMATION

Company: GZA GeoEnvironmental
Client: Indian Point Energy Center
Project: 41.0017869.10
Location: Buchanan, New York
Test Well: MW-52 (38.8-48.5)
Test Date: 6/5/06

AQUIFER DATA

Saturated Thickness: 300. ft Anisotropy Ratio (Kz/Kr): 0.1

WELL DATA (MW-52 Test13)

Initial Displacement: 20.33 ft Static Water Column Height: 37.6 ft
Total Well Penetration Depth: 37.6 ft Screen Length: 10. ft
Casing Radius: 0.08333 ft Wellbore Radius: 0.159 ft

SOLUTION

Aquifer Model: Unconfined Solution Method: Hvorslev

K = 0.001321 ft/day y0 = 20.23 ft

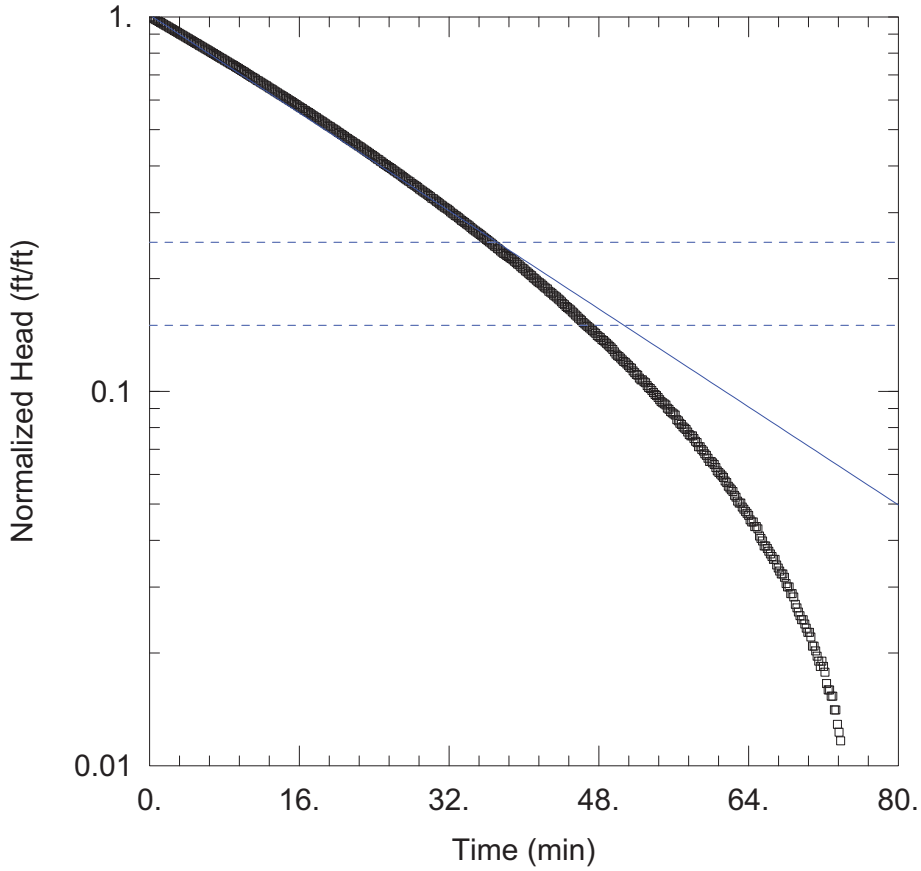

MW-52 TEST12

Data Set: J:\...\MW-52 t12.aqt
Date: 09/10/07 Time: 17:26:27

PROJECT INFORMATION

Company: GZA GeoEnvironmental
Client: Indian Point Energy Center
Project: 41.0017869.10
Location: Buchanan, New York
Test Well: MW-52 (50-59.7)
Test Date: 6/5/06

AQUIFER DATA

Saturated Thickness: 300. ft Anisotropy Ratio (Kz/Kr): 0.1

WELL DATA (MW-52 Test12)

Initial Displacement: 23.34 ft Static Water Column Height: 59.7 ft
Total Well Penetration Depth: 59.7 ft Screen Length: 10. ft
Casing Radius: 0.08333 ft Wellbore Radius: 0.159 ft

SOLUTION

Aquifer Model: Unconfined Solution Method: Hvorslev

K = 0.0997 ft/day y0 = 23.65 ft

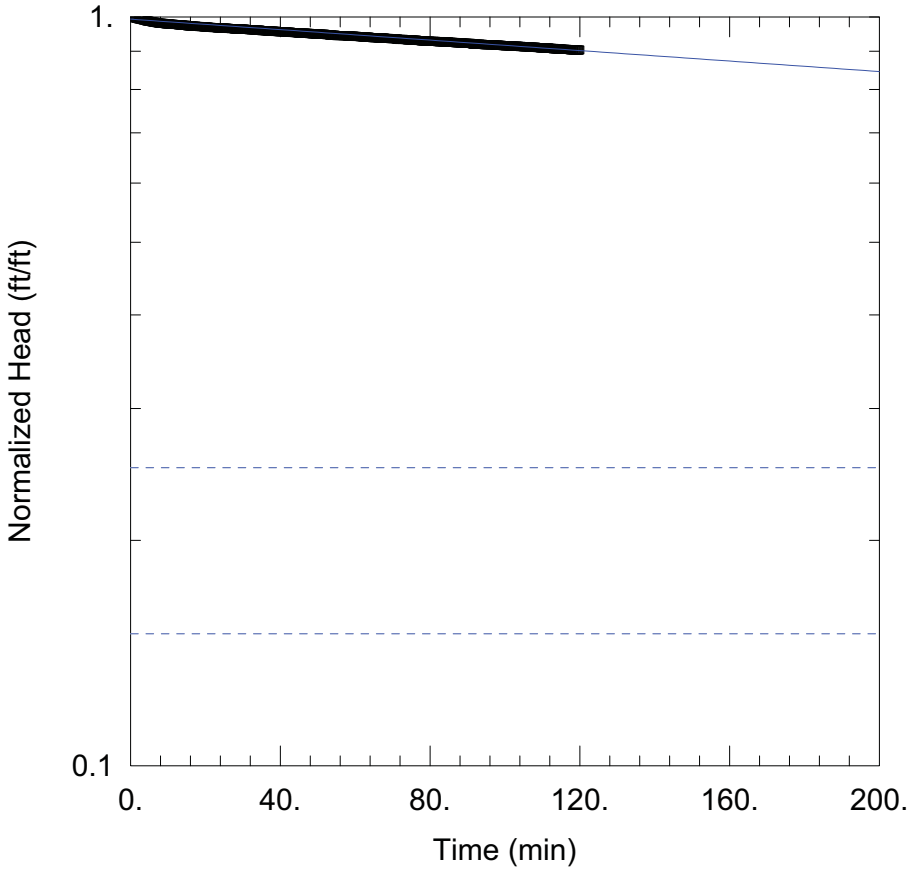

MW-52 TEST11

Data Set: J:\...\MW-52 t11.aqt
Date: 04/19/07 Time: 16:45:56

PROJECT INFORMATION

Company: GZA GeoEnvironmental
Client: Indian Point Energy Center
Project: 41.0017869.10
Location: Buchanan, New York
Test Well: MW-52 (60-69.7)
Test Date: 6/5/06

AQUIFER DATA

Saturated Thickness: 300. ft Anisotropy Ratio (Kz/Kr): 0.1

WELL DATA (MW-52 Test11)

Initial Displacement: 20.83 ft Static Water Column Height: 69.7 ft
Total Well Penetration Depth: 69.7 ft Screen Length: 10. ft
Casing Radius: 0.08333 ft Wellbore Radius: 0.159 ft

SOLUTION

Aquifer Model: Unconfined Solution Method: Hvorslev

K = 0.002132 ft/day y0 = 20.69 ft

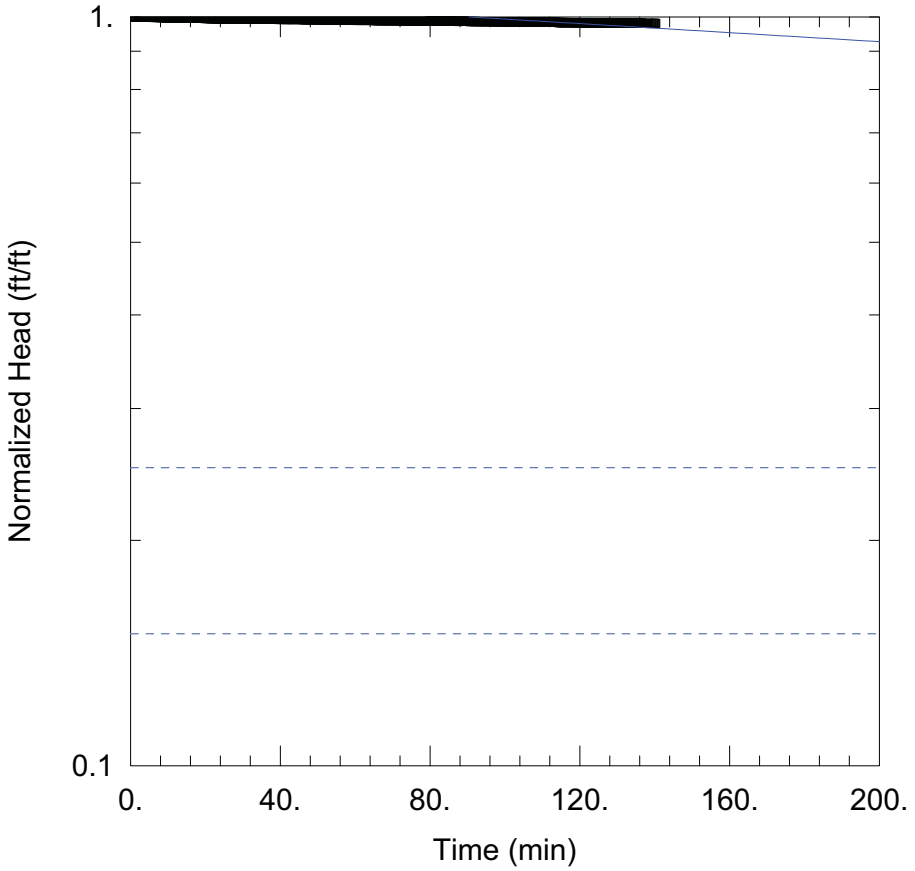

MW-52 TEST10

Data Set: J:\...\MW-52 t10.aqt
Date: 04/19/07 Time: 16:45:16

PROJECT INFORMATION

Company: GZA GeoEnvironmental
Client: Indian Point Energy Center
Project: 41.0017869.10
Location: Buchanan, New York
Test Well: MW-52 (69-78.7)
Test Date: 6/2/06

AQUIFER DATA

Saturated Thickness: 300. ft Anisotropy Ratio (Kz/Kr): 0.1

WELL DATA (MW-52 Test10)

Initial Displacement: 21.17 ft Static Water Column Height: 78.7 ft
Total Well Penetration Depth: 78.7 ft Screen Length: 10. ft
Casing Radius: 0.08333 ft Wellbore Radius: 0.159 ft

SOLUTION

Aquifer Model: Unconfined Solution Method: Hvorslev

K = 0.001839 ft/day y0 = 22.54 ft

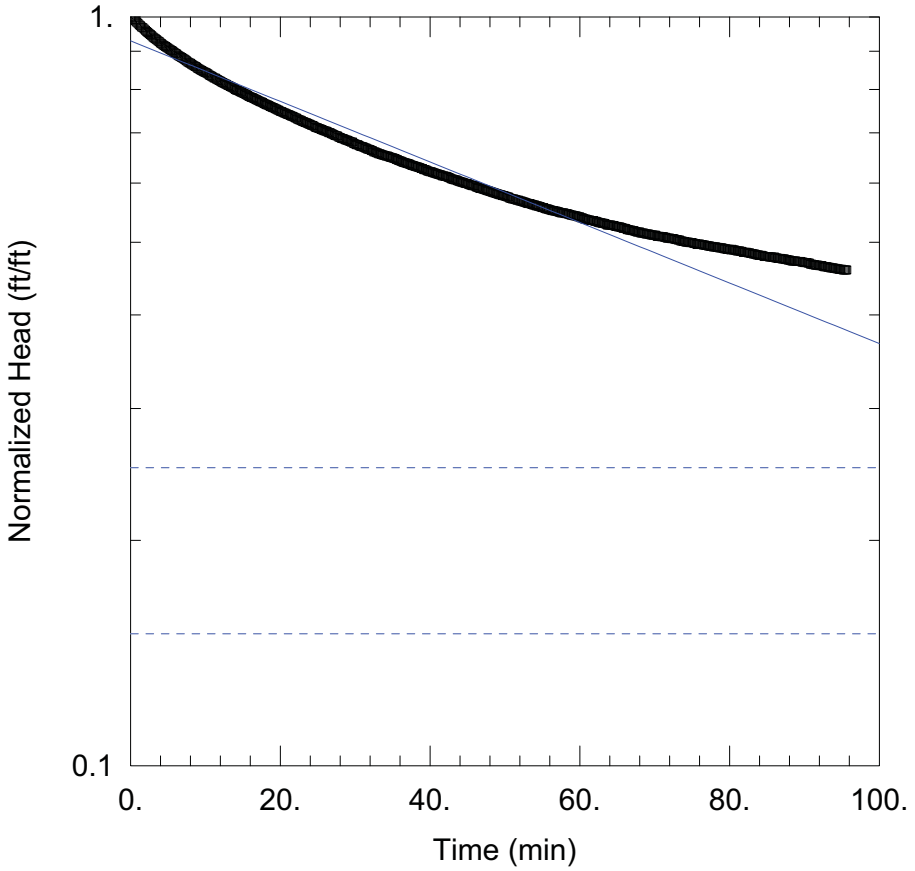

MW-52 TEST9

Data Set: J:\...\MW-52 t9.aqt
Date: 04/19/07 Time: 16:44:34

PROJECT INFORMATION

Company: GZA GeoEnvironmental
Client: Indian Point Energy Center
Project: 41.0017869.10
Location: Buchanan, New York
Test Well: MW-52 (76.4-86.1)
Test Date: 6/2/06

AQUIFER DATA

Saturated Thickness: 300. ft Anisotropy Ratio (Kz/Kr): 0.1

WELL DATA (MW-52 Test9)

Initial Displacement: 19.17 ft Static Water Column Height: 75.2 ft
Total Well Penetration Depth: 75.2 ft Screen Length: 10. ft
Casing Radius: 0.08333 ft Wellbore Radius: 0.159 ft

SOLUTION

Aquifer Model: Unconfined Solution Method: Hvorslev

K = 0.02463 ft/day y0 = 17.81 ft

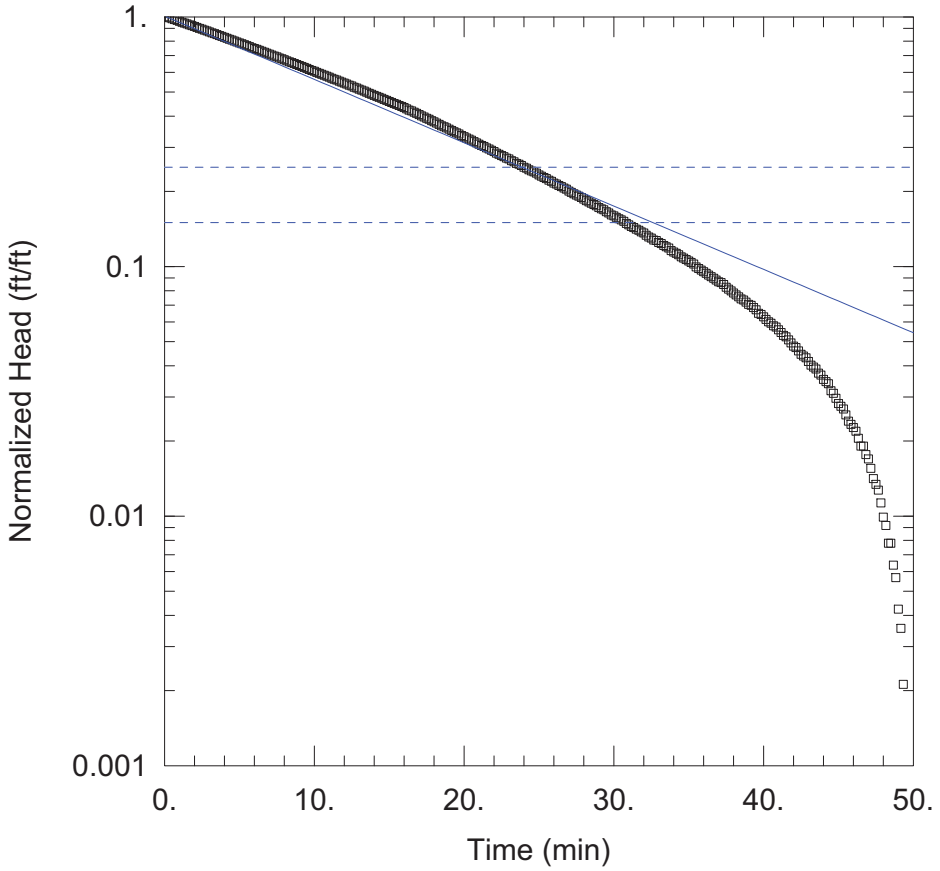

MW-52 TEST8

Data Set: J:\...\MW-52 t8.aqt
Date: 09/10/07 Time: 17:26:17

PROJECT INFORMATION

Company: GZA GeoEnvironmental
Client: Indian Point Energy Center
Project: 41.0017869.10
Location: Buchanan, New York
Test Well: MW-52 (89-98.7)
Test Date: 6/1/06

AQUIFER DATA

Saturated Thickness: 300. ft Anisotropy Ratio (Kz/Kr): 0.1

WELL DATA (MW-52 Test8)

Initial Displacement: 20.29 ft Static Water Column Height: 87.8 ft
Total Well Penetration Depth: 87.8 ft Screen Length: 10. ft
Casing Radius: 0.08333 ft Wellbore Radius: 0.159 ft

SOLUTION

Aquifer Model: Unconfined Solution Method: Hvorslev

K = 0.1546 ft/day y0 = 20.45 ft

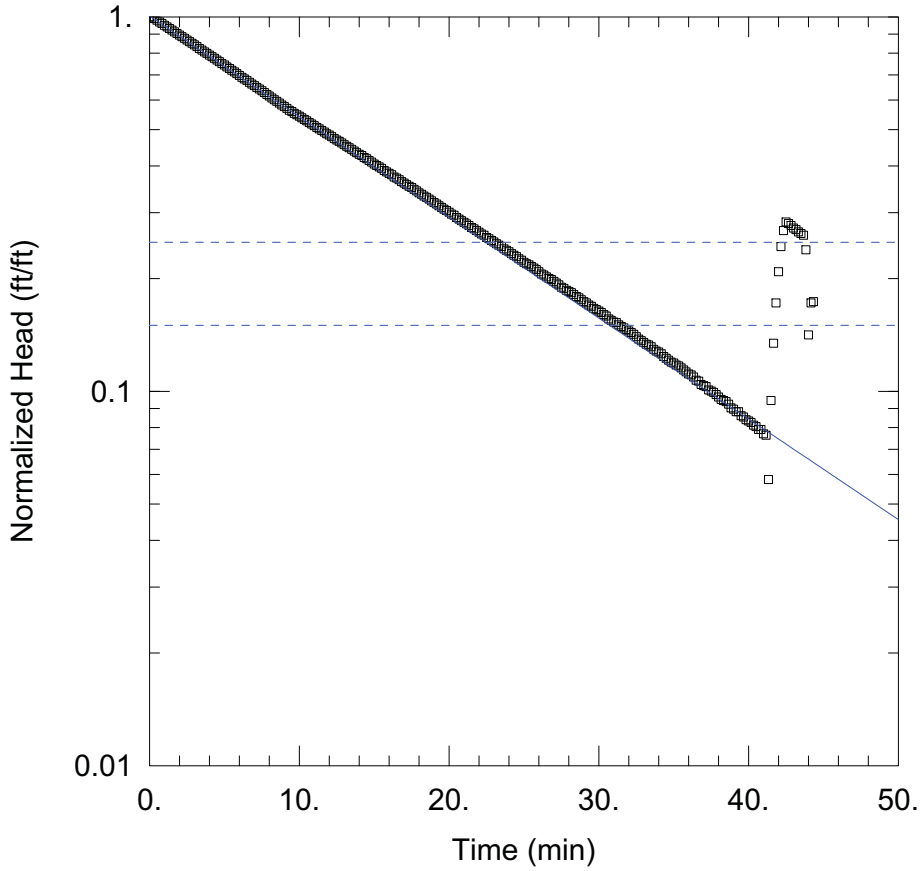

MW-52 TEST7

Data Set: J:\...\MW-52 t7.aqt
Date: 04/19/07 Time: 16:43:55

PROJECT INFORMATION

Company: GZA GeoEnvironmental
Client: Indian Point Energy Center
Project: 41.0017869.10
Location: Buchanan, New York
Test Well: MW-52 (100.5-110.2)
Test Date: 6/1/06

AQUIFER DATA

Saturated Thickness: 300. ft Anisotropy Ratio (Kz/Kr): 0.1

WELL DATA (MW-52 Test7)

Initial Displacement: 20.47 ft Static Water Column Height: 99.3 ft
Total Well Penetration Depth: 99.3 ft Screen Length: 10. ft
Casing Radius: 0.08333 ft Wellbore Radius: 0.159 ft

SOLUTION

Aquifer Model: Unconfined Solution Method: Hvorslev

K = 0.164 ft/day y0 = 20.61 ft

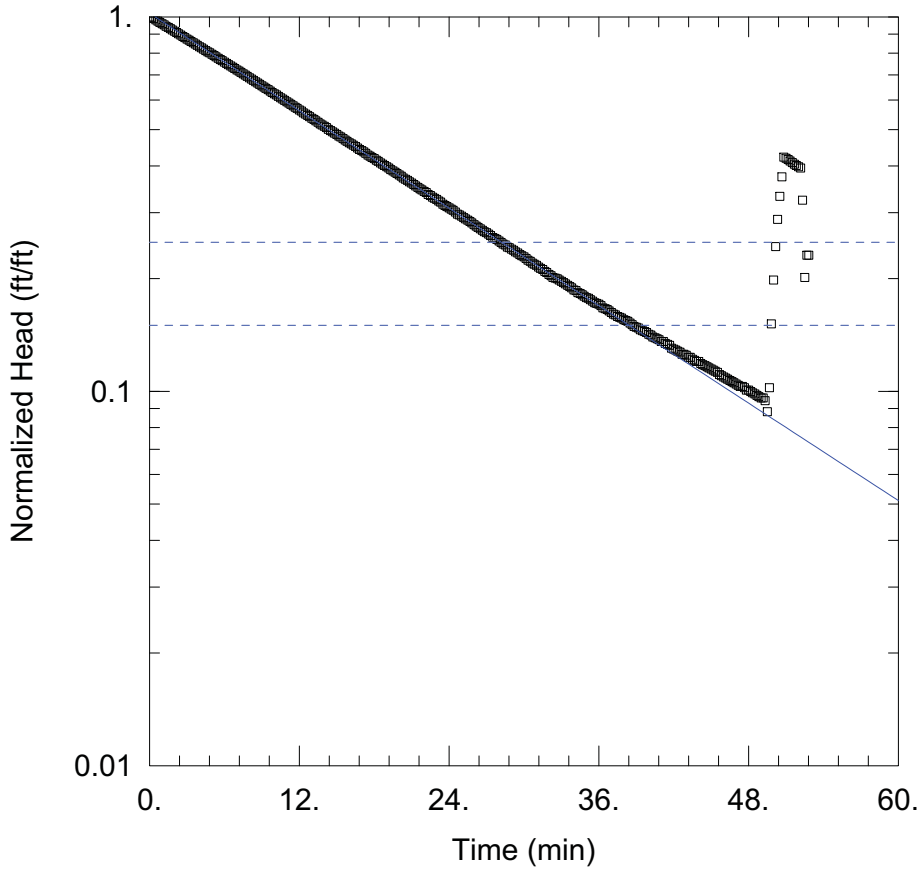

MW-52 TEST6

Data Set: J:\...\MW-52 t6.aqt
Date: 04/19/07 Time: 16:43:27

PROJECT INFORMATION

Company: GZA GeoEnvironmental
Client: Indian Point Energy Center
Project: 41.0017869.10
Location: Buchanan, New York
Test Well: MW-52 (115.3-125)
Test Date: 6/1/06

AQUIFER DATA

Saturated Thickness: 300. ft Anisotropy Ratio (Kz/Kr): 0.1

WELL DATA (MW-52 Test6)

Initial Displacement: 18.36 ft Static Water Column Height: 114.1 ft
Total Well Penetration Depth: 114.1 ft Screen Length: 10. ft
Casing Radius: 0.08333 ft Wellbore Radius: 0.159 ft

SOLUTION

Aquifer Model: Unconfined Solution Method: Hvorslev

K = 0.1322 ft/day y0 = 18.78 ft

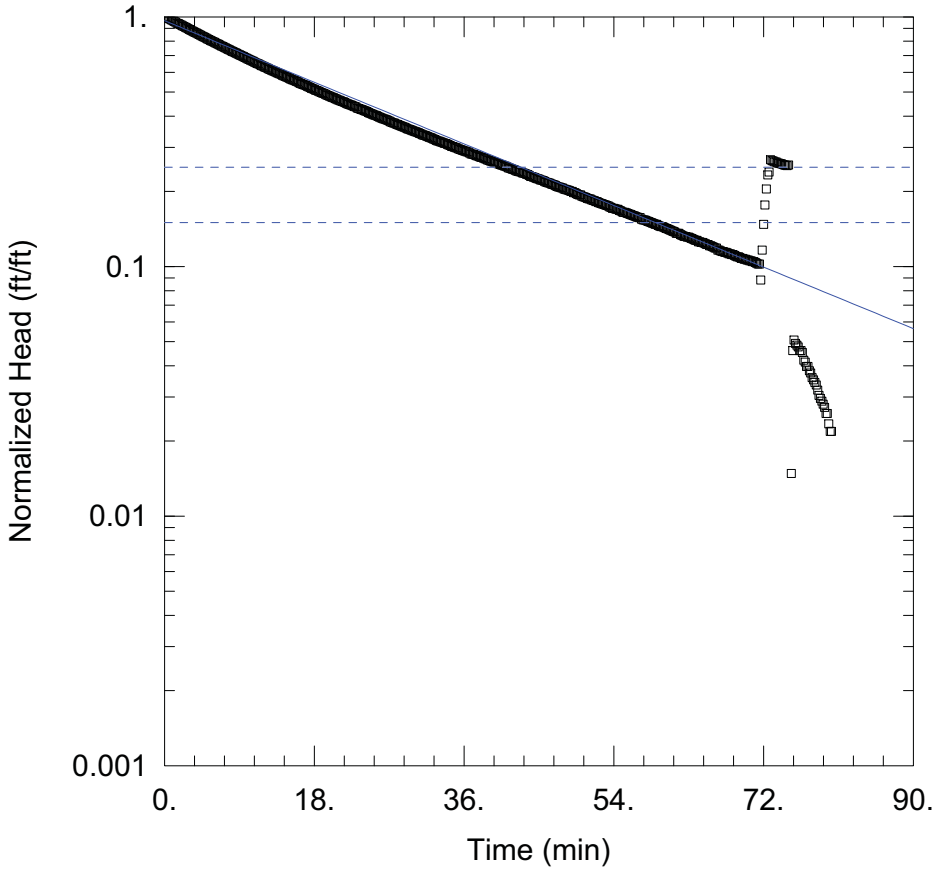

MW-52 TEST5

Data Set: J:\...\MW-52 t5.aqt
Date: 04/19/07 Time: 16:42:52

PROJECT INFORMATION

Company: GZA GeoEnvironmental
Client: Indian Point Energy Center
Project: 41.0017869.10
Location: Buchanan, New York
Test Well: MW-52 (133.2-142.9)
Test Date: 5/31/06

AQUIFER DATA

Saturated Thickness: 300. ft Anisotropy Ratio (Kz/Kr): 0.1

WELL DATA (MW-52 Test5)

Initial Displacement: 18.36 ft Static Water Column Height: 132. ft
Total Well Penetration Depth: 132. ft Screen Length: 10. ft
Casing Radius: 0.08333 ft Wellbore Radius: 0.159 ft

SOLUTION

Aquifer Model: Unconfined Solution Method: Hvorslev

K = 0.08353 ft/day y0 = 17.74 ft

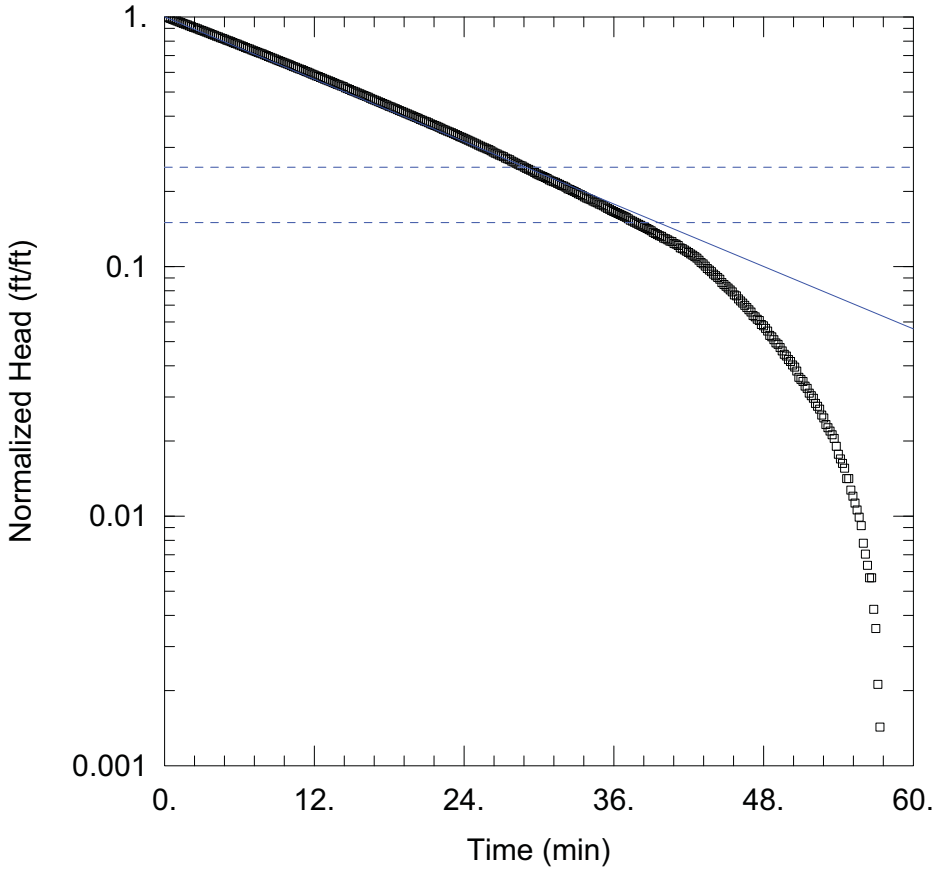

MW-52 TEST4

Data Set: J:\...\MW-52 t4.aqt
Date: 04/26/07 Time: 23:16:40

PROJECT INFORMATION

Company: GZA GeoEnvironmental
Client: Indian Point Energy Center
Project: 41.0017869.10
Location: Buchanan, New York
Test Well: MW-52 (143.5-153.2)
Test Date: 5/31/06

AQUIFER DATA

Saturated Thickness: 300. ft Anisotropy Ratio (Kz/Kr): 0.1

WELL DATA (MW-52 Test4)

Initial Displacement: 20.31 ft Static Water Column Height: 142.3 ft
Total Well Penetration Depth: 142.3 ft Screen Length: 10. ft
Casing Radius: 0.08333 ft Wellbore Radius: 0.159 ft

SOLUTION

Aquifer Model: Unconfined Solution Method: Hvorslev

K = 0.127 ft/day y0 = 20.33 ft

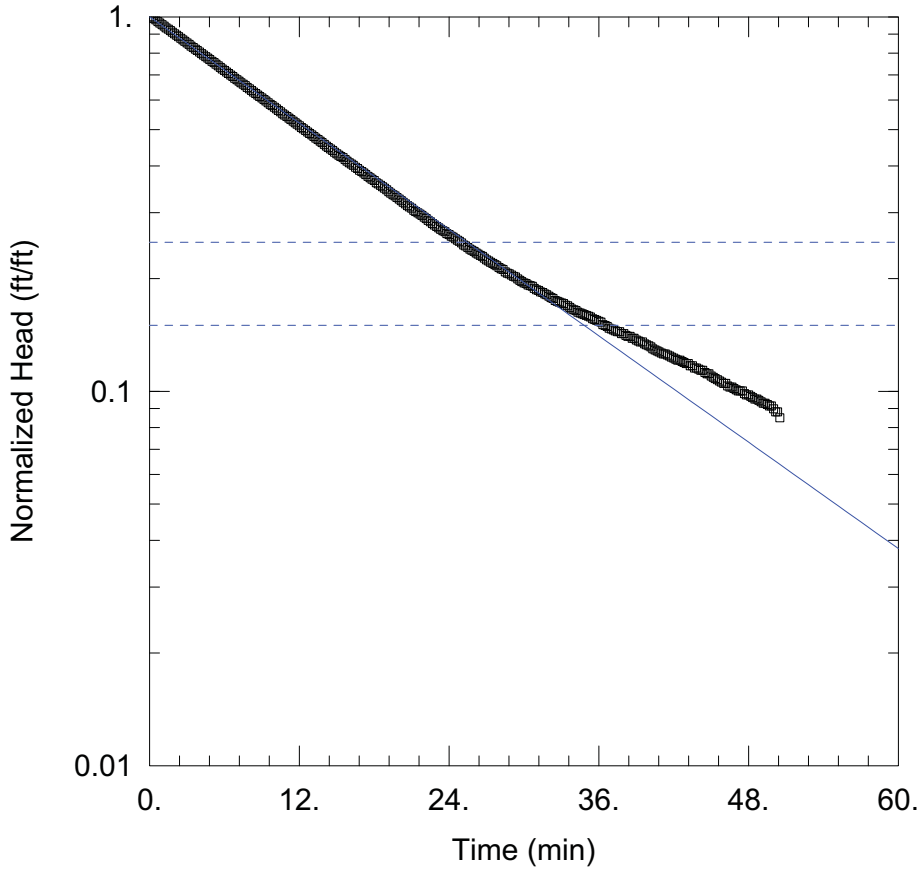

MW-52 TEST3

Data Set: J:\...\MW-52 t3.aqt
Date: 04/19/07 Time: 16:42:02

PROJECT INFORMATION

Company: GZA GeoEnvironmental
Client: Indian Point Energy Center
Project: 41.0017869.10
Location: Buchanan, New York
Test Well: MW-52 (158.3-168)
Test Date: 5/31/06

AQUIFER DATA

Saturated Thickness: 300. ft Anisotropy Ratio (Kz/Kr): 0.1

WELL DATA (MW-52 Test3)

Initial Displacement: 17.9 ft Static Water Column Height: 157.1 ft
Total Well Penetration Depth: 157.1 ft Screen Length: 10. ft
Casing Radius: 0.08333 ft Wellbore Radius: 0.159 ft

SOLUTION

Aquifer Model: Unconfined Solution Method: Hvorslev

K = 0.1443 ft/day y0 = 17.93 ft

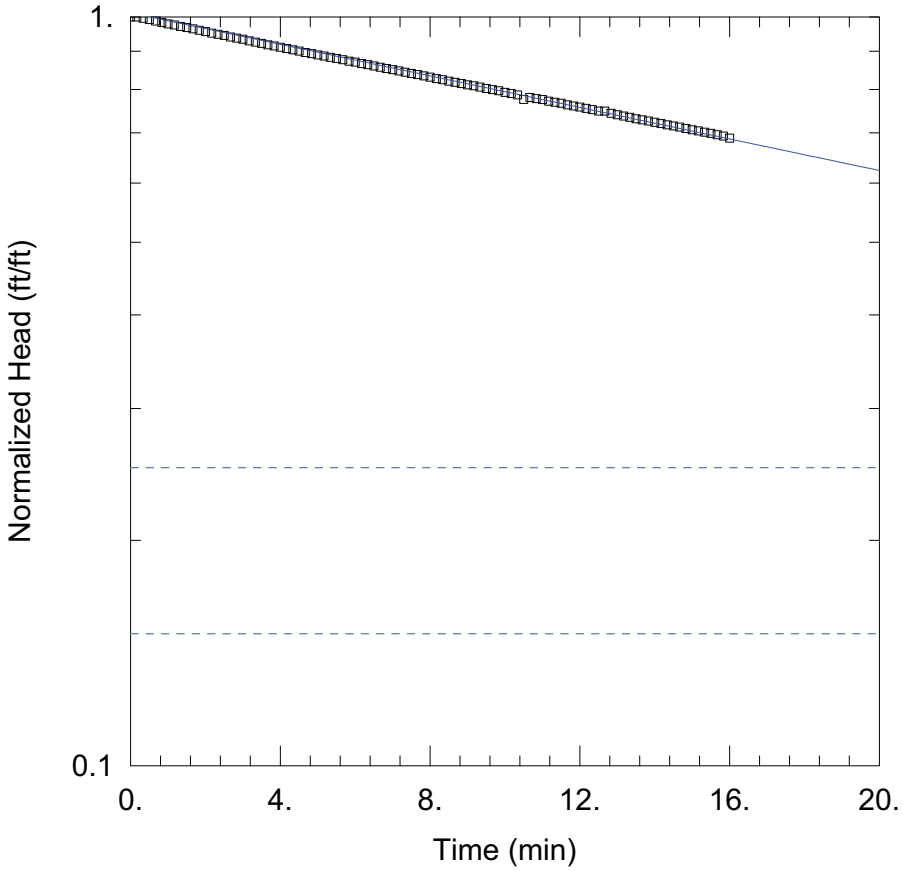

MW-52 TEST2

Data Set: J:\...\MW-52 t2.aqt
Date: 04/19/07 Time: 16:41:30

PROJECT INFORMATION

Company: GZA GeoEnvironmental
Client: Indian Point Energy Center
Project: 41.0017869.10
Location: Buchanan, New York
Test Well: MW-52 (168.5-178.2)
Test Date: 5/30/06

AQUIFER DATA

Saturated Thickness: 300. ft Anisotropy Ratio (Kz/Kr): 0.1

WELL DATA (MW-52 Test2)

Initial Displacement: 32.83 ft Static Water Column Height: 167.3 ft
Total Well Penetration Depth: 167.3 ft Screen Length: 10. ft
Casing Radius: 0.08333 ft Wellbore Radius: 0.159 ft

SOLUTION

Aquifer Model: Unconfined Solution Method: Hvorslev

K = 0.06415 ft/day y0 = 33.24 ft

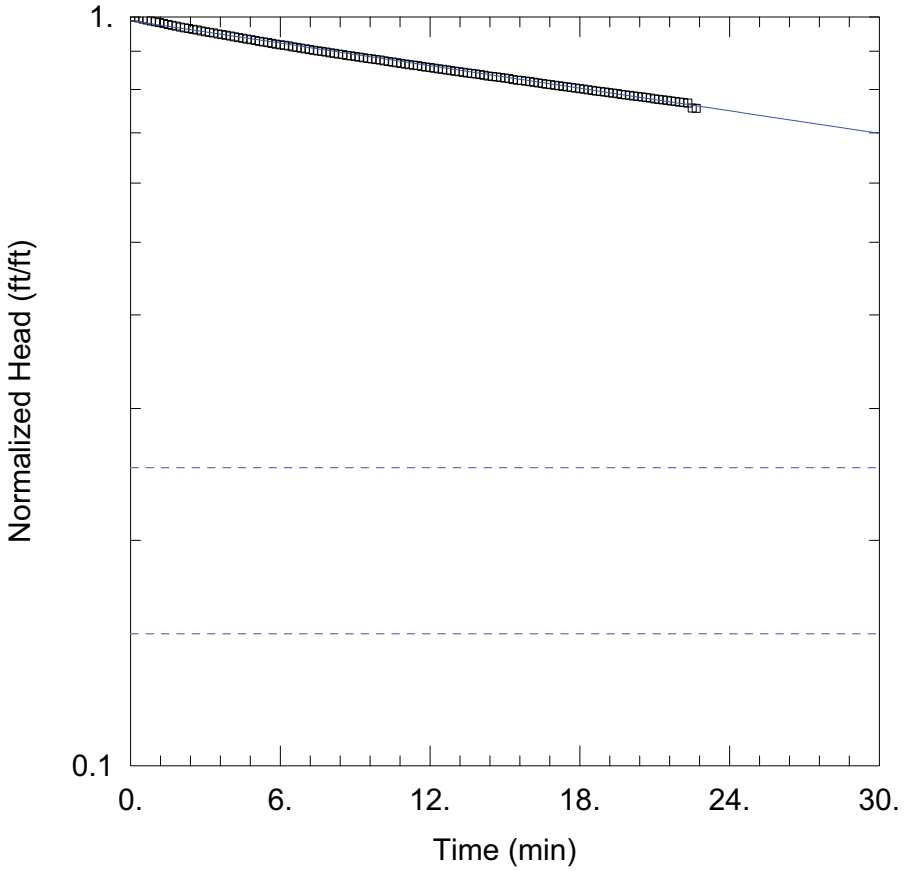

MW-52 TEST1

Data Set: J:\...\MW-52 t1.aqt
Date: 04/19/07 Time: 16:40:57

PROJECT INFORMATION

Company: GZA GeoEnvironmental
Client: Indian Point Energy Center
Project: 41.0017869.10
Location: Buchanan, New York
Test Well: MW-52 (179.5-189.2)
Test Date: 5/30/06

AQUIFER DATA

Saturated Thickness: 300. ft Anisotropy Ratio (Kz/Kr): 0.1

WELL DATA (MW-52 Test 1)

Initial Displacement: 36.79 ft Static Water Column Height: 178.3 ft
Total Well Penetration Depth: 178.3 ft Screen Length: 10. ft
Casing Radius: 0.08333 ft Wellbore Radius: 0.159 ft

SOLUTION

Aquifer Model: Unconfined Solution Method: Hvorslev

K = 0.0306 ft/day y0 = 36.38 ft

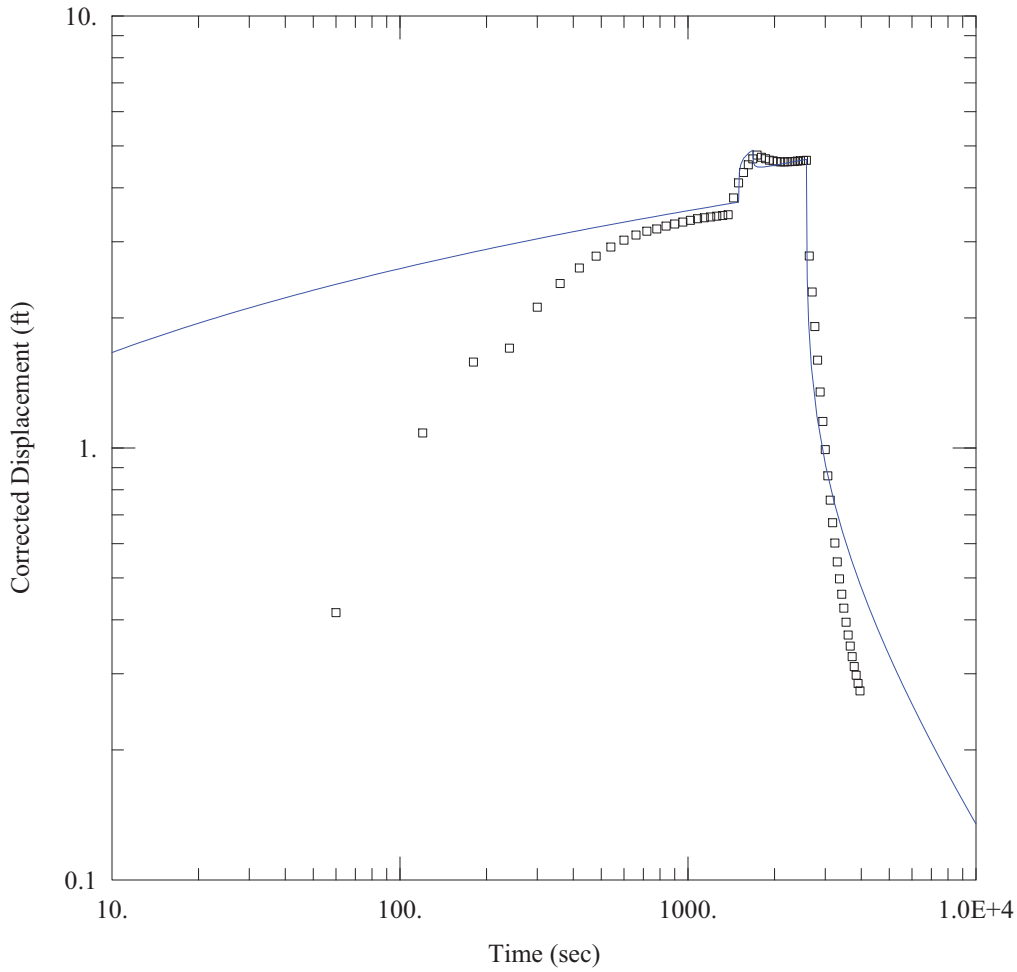

MW-53-80 EXTRACTION TEST

Data Set: J:\...\MW-53-80 theis.aqt
Date: 09/12/07 Time: 14:13:29

PROJECT INFORMATION

Company: GZA GeoEnvironmental
Client: Indian Point Energy Center
Project: 41.0017869.10
Location: Buchanan, NY
Test Well: MW-53-80
Test Date: 12/19/06

WELL DATA

Pumping Wells

Well Name	X (ft)	Y (ft)
MW-53-80	0	0

Observation Wells

Well Name	X (ft)	Y (ft)
▫ MW-53-80	0	0

SOLUTION

Aquifer Model: Unconfined
Solution Method: Theis

T = 18.75 ft^2/day
S = 0.003325
Kz/Kr = 1.
b = 300. ft

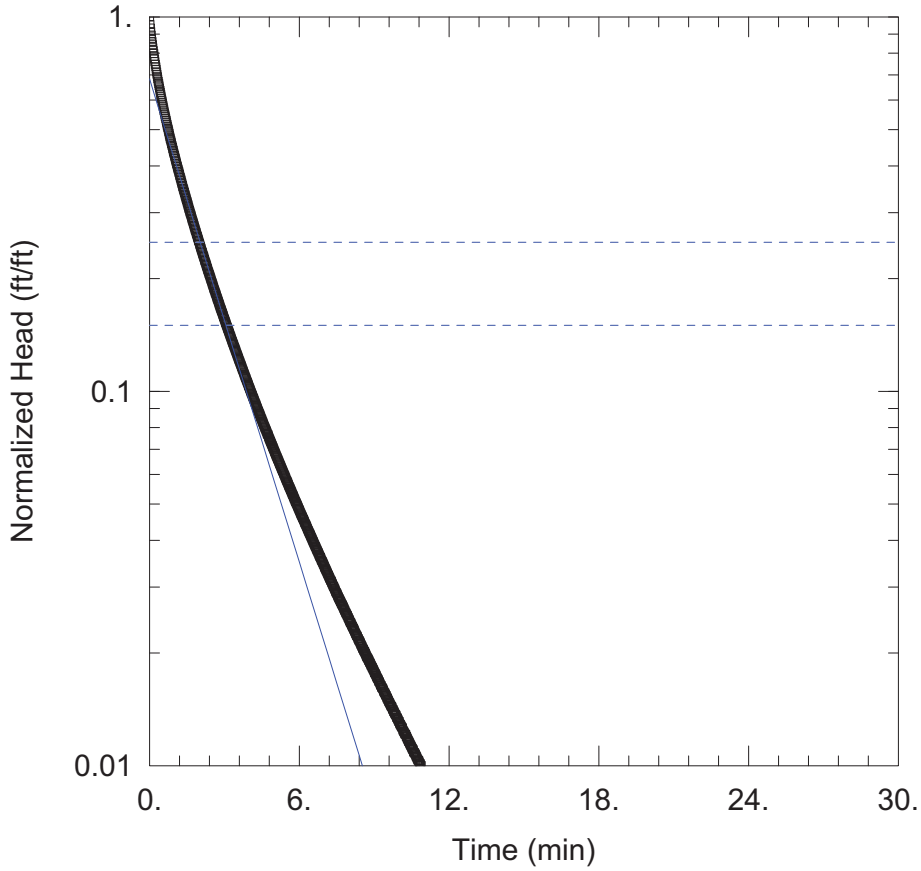

MW53-120 SLUG TEST 2

Data Set: J:\...\MW53-120 2.aqt
Date: 09/12/07 Time: 14:13:55

PROJECT INFORMATION

Company: GZA GeoEnvironmental
Client: Indian Point Energy Center
Project: 41.0017869.10
Location: Buchanan, New York
Test Well: MW53-120
Test Date: 12/28/06

AQUIFER DATA

Saturated Thickness: 300. ft Anisotropy Ratio (Kz/Kr): 0.1

WELL DATA (MW-53-120)

Initial Displacement: 29.55 ft Static Water Column Height: 92.2 ft
Total Well Penetration Depth: 62.2 ft Screen Length: 26. ft
Casing Radius: 0.04167 ft Wellbore Radius: 0.159 ft

SOLUTION

Aquifer Model: Unconfined Solution Method: Hvorslev

K = 0.1487 ft/day y0 = 20.18 ft

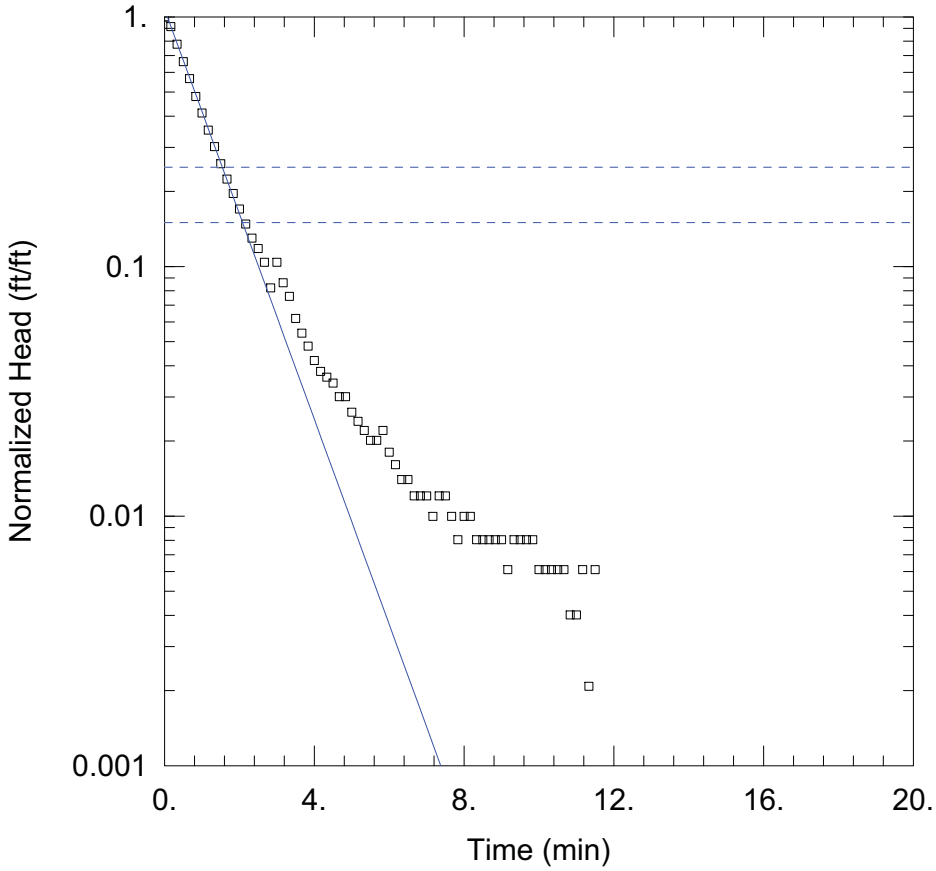

MW-54 TEST 17

Data Set: J:\...\MW-54 T17.aqt
Date: 04/20/07 Time: 11:35:17

PROJECT INFORMATION

Company: GZA GeoEnvironmental
Client: Indian Point Energy Center
Project: 41.0017869.10
Location: Buchanan, New York
Test Well: MW-54 (187.0-206.0)
Test Date: 10/2/06

AQUIFER DATA

Saturated Thickness: 300. ft Anisotropy Ratio (Kz/Kr): 0.1

WELL DATA (MW-54Test 17)

Initial Displacement: 7.213 ft Static Water Column Height: 196.4 ft
Total Well Penetration Depth: 196.4 ft Screen Length: 19. ft
Casing Radius: 0.08333 ft Wellbore Radius: 0.159 ft

SOLUTION

Aquifer Model: Unconfined Solution Method: Hvorslev

K = 1.478 ft/day y0 = 7.77 ft

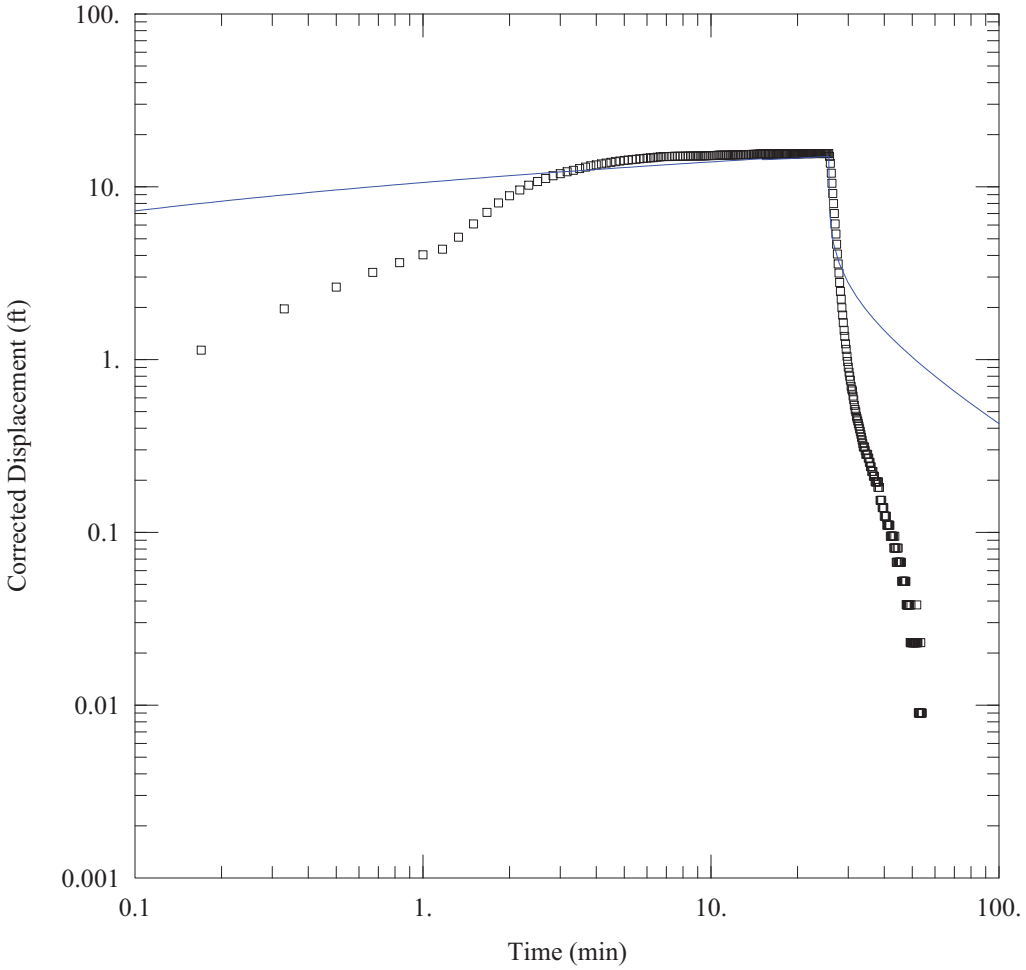

MW-54 T16 PACKERED EXTRACTION

Data Set: J:\...\MW-54 t16 theis.aqt
Date: 09/10/07 Time: 17:35:04

PROJECT INFORMATION

Company: GZA GeoEnvironmental
Client: Indian Point Energy Center
Project: 41.0017869.10
Location: Buchanan, NY
Test Well: MW-54
Test Date: 10/2/06

WELL DATA

Pumping Wells

Well Name	X (ft)	Y (ft)
MW-54	0	0

Observation Wells

Well Name	X (ft)	Y (ft)
▫ MW-54	0	0

SOLUTION

Aquifer Model: Unconfined
Solution Method: Theis

T = 23.75 ft^2/day
S = 0.001002
Kz/Kr = 1.
b = 300. ft

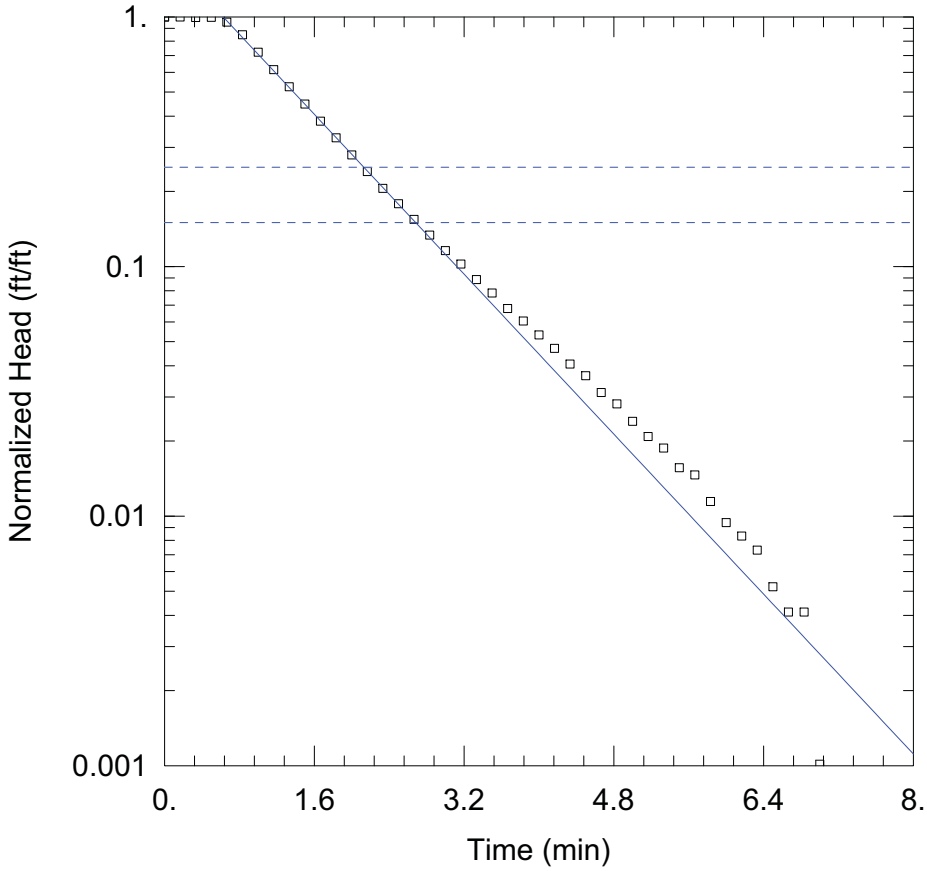

MW-54 TEST 15

Data Set: J:\...\MW-54 T15.aqt
Date: 04/20/07 Time: 11:33:55

PROJECT INFORMATION

Company: GZA GeoEnvironmental
Client: Indian Point Energy Center
Project: 41.0017869.10
Location: Buchanan, New York
Test Well: MW-54 (172.3-182.0)
Test Date: 10/2/06

AQUIFER DATA

Saturated Thickness: 300. ft Anisotropy Ratio (Kz/Kr): 0.1

WELL DATA (MW-54Test 15)

Initial Displacement: 13.81 ft Static Water Column Height: 172.4 ft
Total Well Penetration Depth: 172.4 ft Screen Length: 9.7 ft
Casing Radius: 0.08333 ft Wellbore Radius: 0.159 ft

SOLUTION

Aquifer Model: Unconfined Solution Method: Hvorslev

K = 2.501 ft/day y0 = 24.6 ft

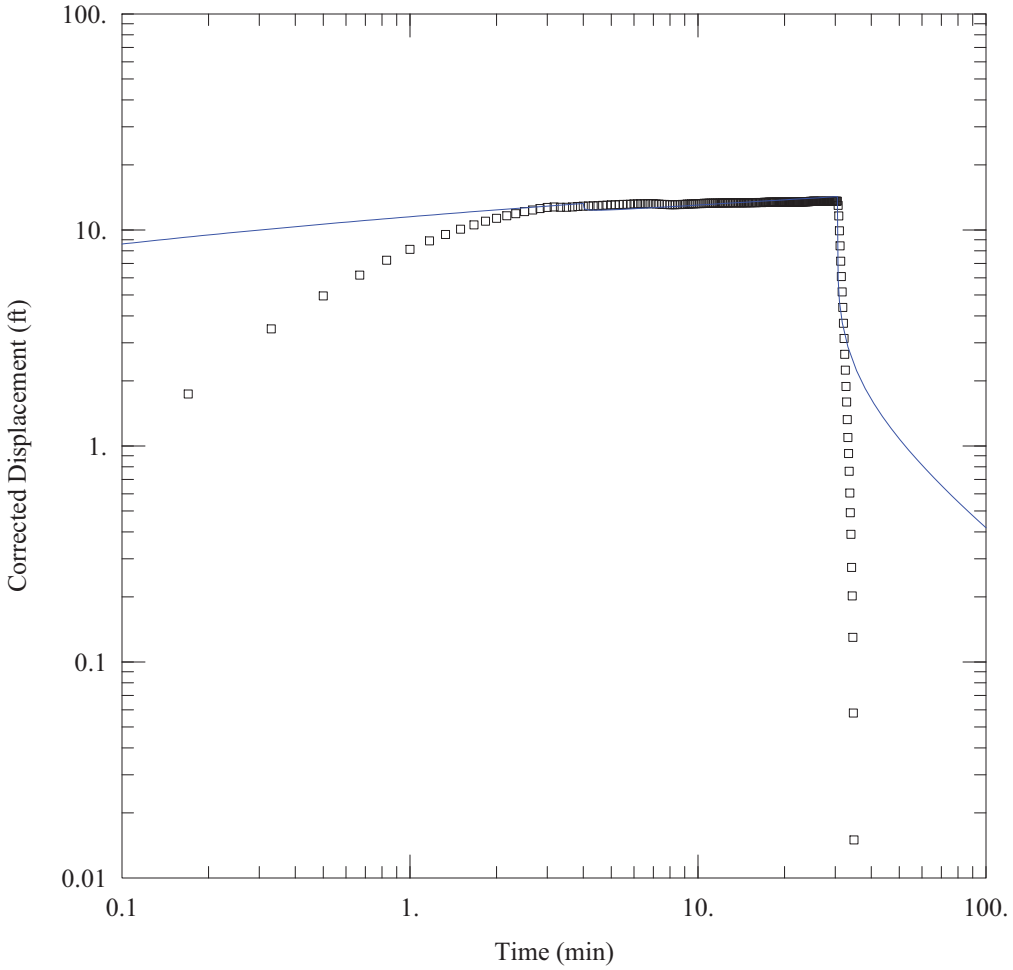

MW-54 T15 PACKERED EXTRACTION

Data Set: J:\...\MW-54 t15 theis.aqt
Date: 09/10/07 Time: 17:34:54

PROJECT INFORMATION

Company: GZA GeoEnvironmental
Client: Indian Point Energy Center
Project: 41.0017869.10
Location: Buchanan, NY
Test Well: MW-54
Test Date: 10/2/06

WELL DATA

Pumping Wells

Well Name	X (ft)	Y (ft)
MW-54	0	0

Observation Wells

Well Name	X (ft)	Y (ft)
▫ MW-54	0	0

SOLUTION

Aquifer Model: Unconfined
Solution Method: Theis

T = 30.35 ft^2/day
S = 0.000205
Kz/Kr = 1.
b = 300. ft

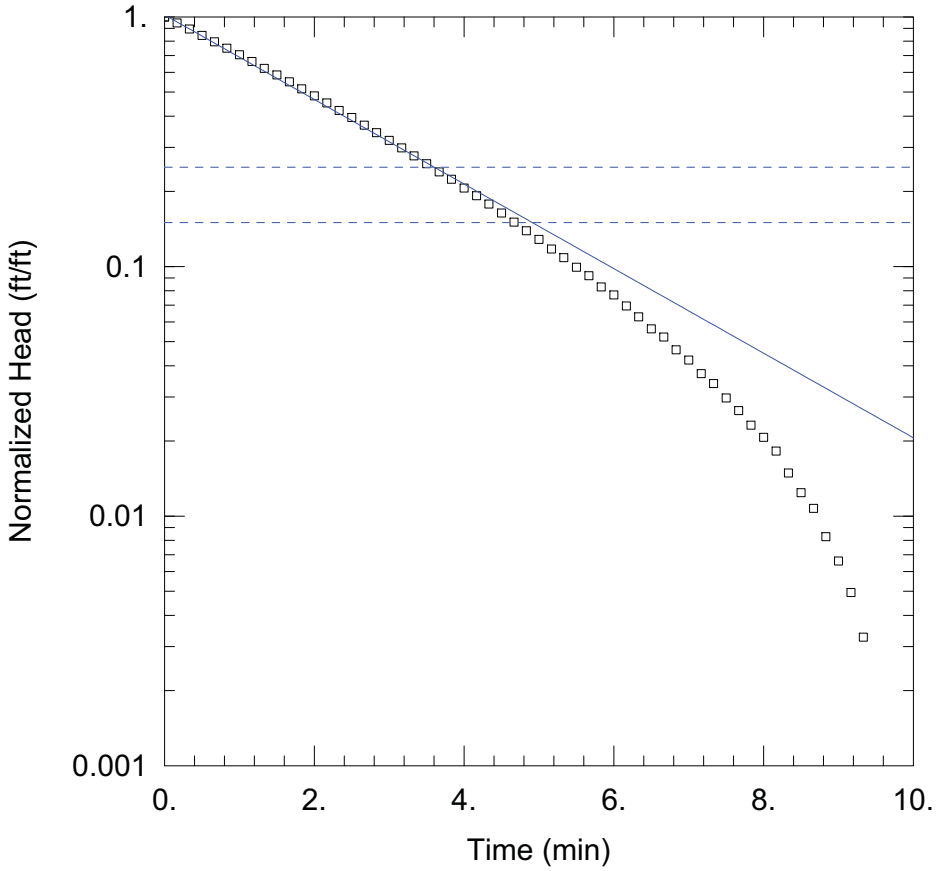

MW-54 TEST 14

Data Set: J:\...\MW-54 T14.aqt
Date: 04/20/07 Time: 11:33:08

PROJECT INFORMATION

Company: GZA GeoEnvironmental
Client: Indian Point Energy Center
Project: 41.0017869.10
Location: Buchanan, New York
Test Well: MW-54 (157.4-167.1)
Test Date: 10/2/06

AQUIFER DATA

Saturated Thickness: 300. ft Anisotropy Ratio (Kz/Kr): 0.1

WELL DATA (MW-54Test 14)

Initial Displacement: 17.41 ft Static Water Column Height: 157.6 ft
Total Well Penetration Depth: 157.6 ft Screen Length: 9.7 ft
Casing Radius: 0.08333 ft Wellbore Radius: 0.159 ft

SOLUTION

Aquifer Model: Unconfined Solution Method: Hvorslev

K = 1.058 ft/day y0 = 17.74 ft

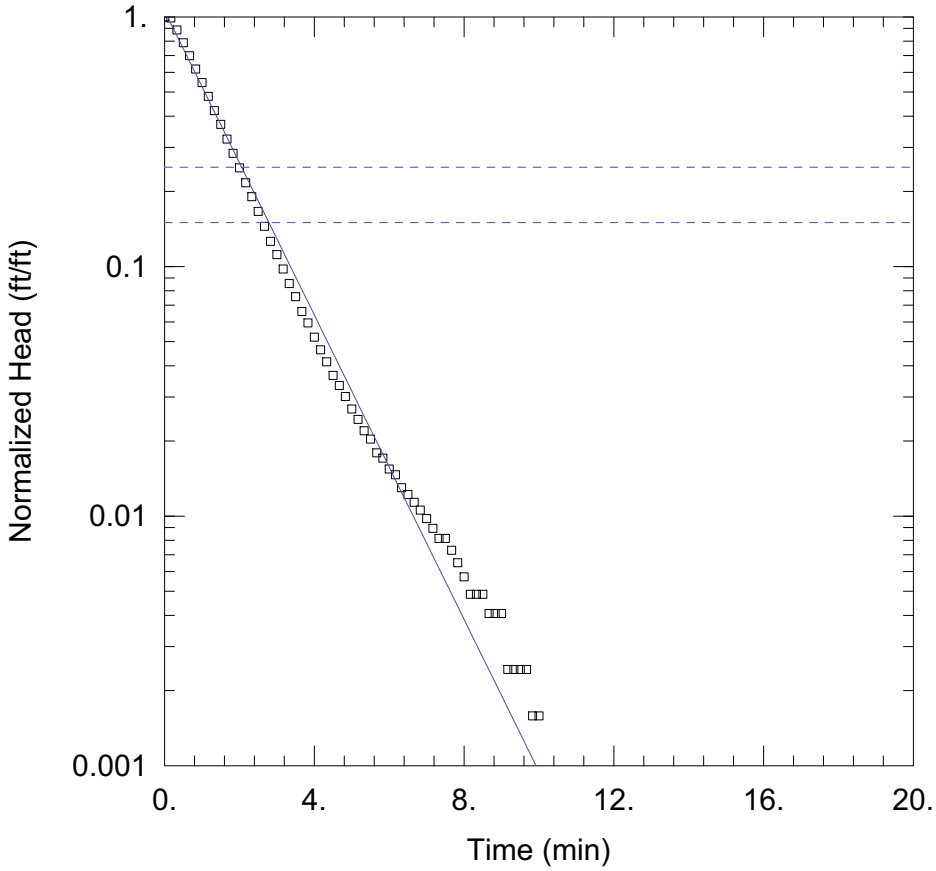

MW-54 TEST 13

Data Set: J:\...\MW-54 T13.aqt
Date: 04/20/07 Time: 11:32:46

PROJECT INFORMATION

Company: GZA GeoEnvironmental
Client: Indian Point Energy Center
Project: 41.0017869.10
Location: Buchanan, New York
Test Well: MW-54 (146.0-155.7)
Test Date: 9/29/06

AQUIFER DATA

Saturated Thickness: 300. ft Anisotropy Ratio (Kz/Kr): 0.1

WELL DATA (MW-54Test 13)

Initial Displacement: 17.69 ft Static Water Column Height: 146.2 ft
Total Well Penetration Depth: 146.2 ft Screen Length: 9.7 ft
Casing Radius: 0.08333 ft Wellbore Radius: 0.159 ft

SOLUTION

Aquifer Model: Unconfined Solution Method: Hvorslev

K = 1.904 ft/day y0 = 18.76 ft

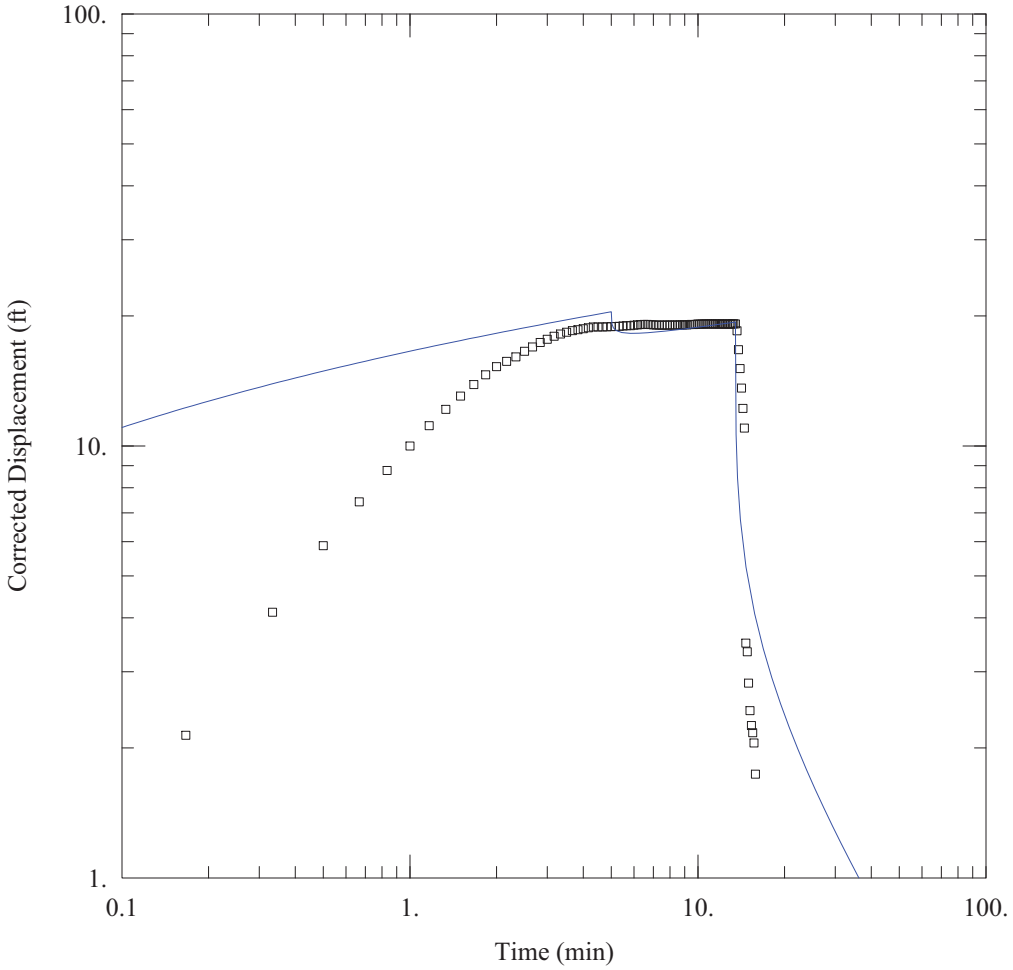

MW-54 T13 PACKERED EXTRACTION

Data Set: J:\...\MW-54 t13 theis.aqt
Date: 09/10/07 Time: 17:34:44

PROJECT INFORMATION

Company: GZA GeoEnvironmental
Client: Indian Point Energy Center
Project: 41.0017869.10
Location: Buchanan, NY
Test Well: MW-54
Test Date: 9/29/06

WELL DATA

Pumping Wells

Well Name	X (ft)	Y (ft)
MW-54	0	0

Observation Wells

Well Name	X (ft)	Y (ft)
▫ MW-54	0	0

SOLUTION

Aquifer Model: Unconfined
Solution Method: Theis

T = 15.91 ft^2/day
S = 0.001007
Kz/Kr = 1.
b = 300. ft

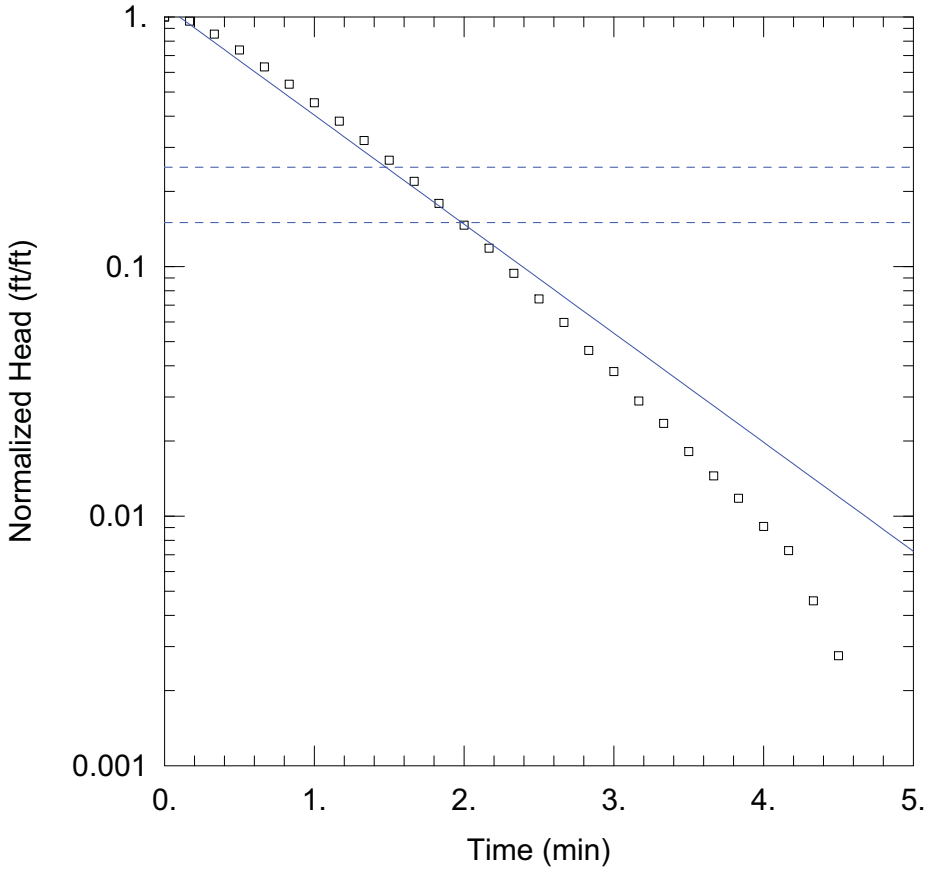

MW-54 TEST 12

Data Set: J:\...\MW-54 T12.aqt
Date: 04/20/07 Time: 11:32:04

PROJECT INFORMATION

Company: GZA GeoEnvironmental
Client: Indian Point Energy Center
Project: 41.0017869.10
Location: Buchanan, New York
Test Well: MW-54 (136.6-146.0)
Test Date: 9/29/06

AQUIFER DATA

Saturated Thickness: 300. ft Anisotropy Ratio (Kz/Kr): 0.1

WELL DATA (MW-54Test 12)

Initial Displacement: 15.94 ft Static Water Column Height: 136.4 ft
Total Well Penetration Depth: 136.4 ft Screen Length: 9.4 ft
Casing Radius: 0.08333 ft Wellbore Radius: 0.159 ft

SOLUTION

Aquifer Model: Unconfined Solution Method: Hvorslev

K = 2.798 ft/day y0 = 17.61 ft

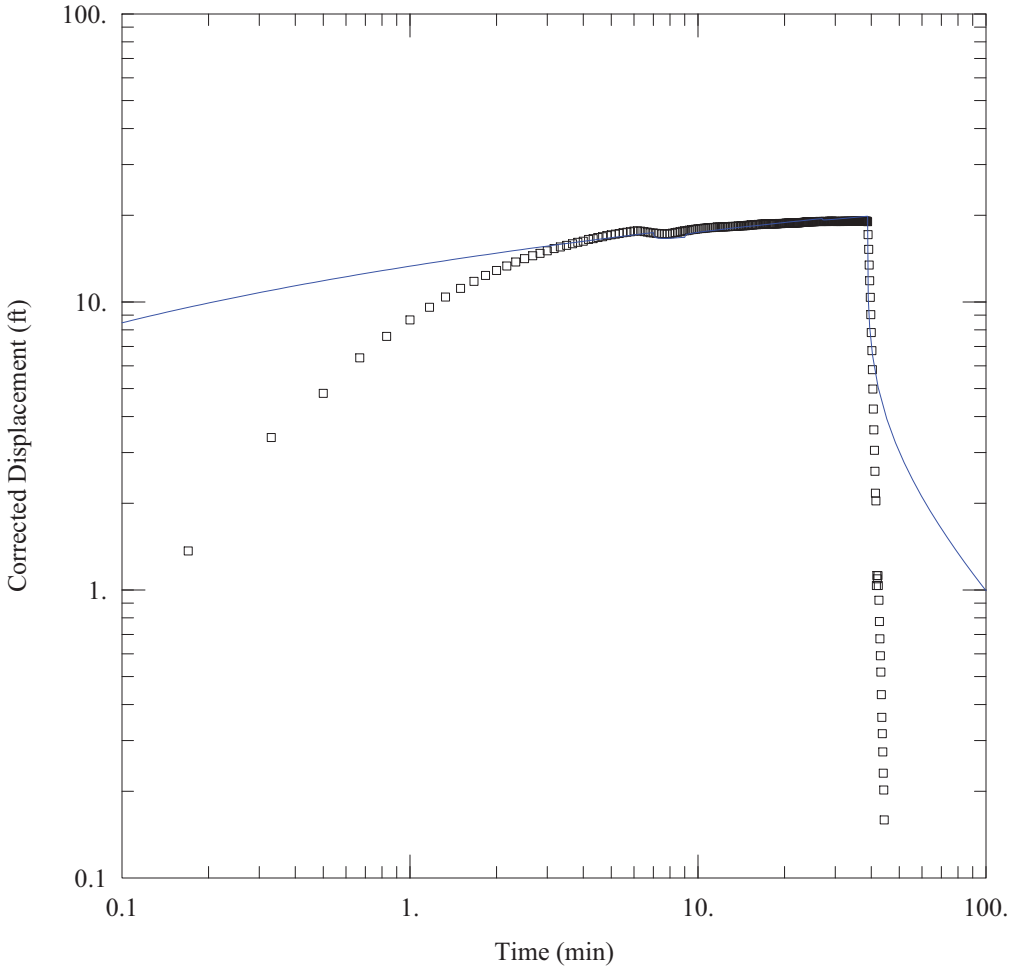

MW-54 T12 PACKERED EXTRACTION

Data Set: J:\...\MW-54 t12 theis.aqt
Date: 09/10/07 Time: 17:34:34

PROJECT INFORMATION

Company: GZA GeoEnvironmental
Client: Indian Point Energy Center
Project: 41.0017869.10
Location: Buchanan, NY
Test Well: MW-54
Test Date: 9/29/06

WELL DATA

Pumping Wells

Well Name	X (ft)	Y (ft)
MW-54	0	0

Observation Wells

Well Name	X (ft)	Y (ft)
▫ MW-54	0	0

SOLUTION

Aquifer Model: Unconfined
Solution Method: Theis

T = 18.13 ft^2/day
S = 0.00206
Kz/Kr = 1.
b = 300. ft

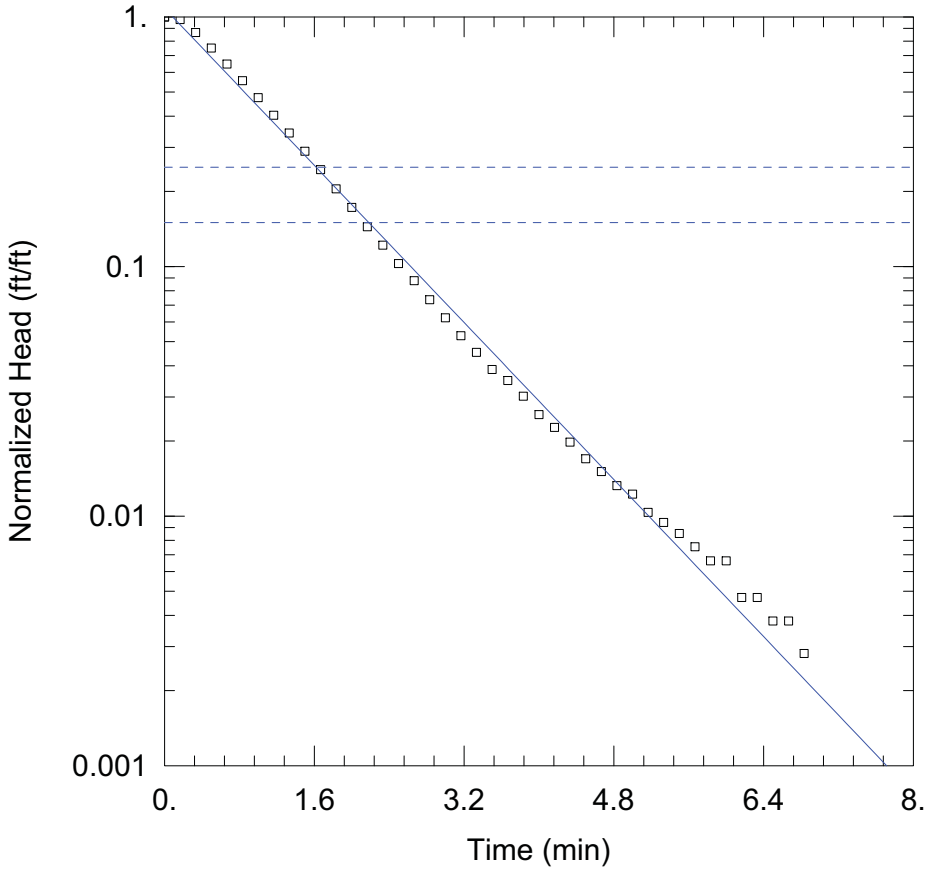

MW-54 TEST 11

Data Set: J:\...\MW-54 T11.aqt
Date: 04/20/07 Time: 11:31:14

PROJECT INFORMATION

Company: GZA GeoEnvironmental
Client: Indian Point Energy Center
Project: 41.0017869.10
Location: Buchanan, New York
Test Well: MW-54 (120.4-130.1)
Test Date: 9/29/06

AQUIFER DATA

Saturated Thickness: 300. ft Anisotropy Ratio (Kz/Kr): 0.1

WELL DATA (MW-54Test 11)

Initial Displacement: 15.26 ft Static Water Column Height: 120.6 ft
Total Well Penetration Depth: 120.6 ft Screen Length: 9.7 ft
Casing Radius: 0.08333 ft Wellbore Radius: 0.159 ft

SOLUTION

Aquifer Model: Unconfined Solution Method: Hvorslev

K = 2.456 ft/day y0 = 16.52 ft

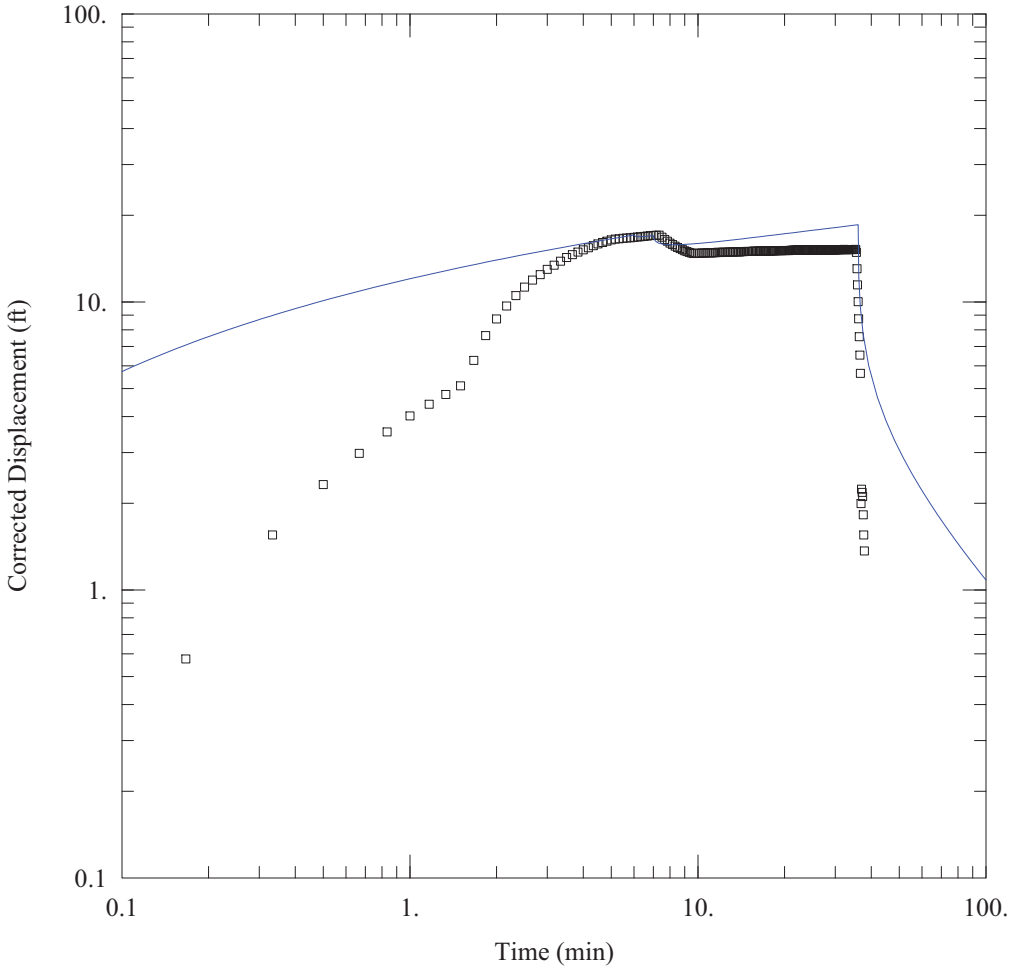

MW-54 T11 PACKERED EXTRACTION

Data Set: J:\...\MW-54 t11 theis.aqt
Date: 09/10/07 Time: 17:34:22

PROJECT INFORMATION

Company: GZA GeoEnvironmental
Client: Indian Point Energy Center
Project: 41.0017869.10
Location: Buchanan, NY
Test Well: MW-54
Test Date: 9/29/06

WELL DATA

Pumping Wells

Well Name	X (ft)	Y (ft)
MW-54	0	0

Observation Wells

Well Name	X (ft)	Y (ft)
▫ MW-54	0	0

SOLUTION

Aquifer Model: Unconfined
Solution Method: Theis

T = 13.03 ft^2/day
S = 0.01141
Kz/Kr = 1.
b = 300. ft

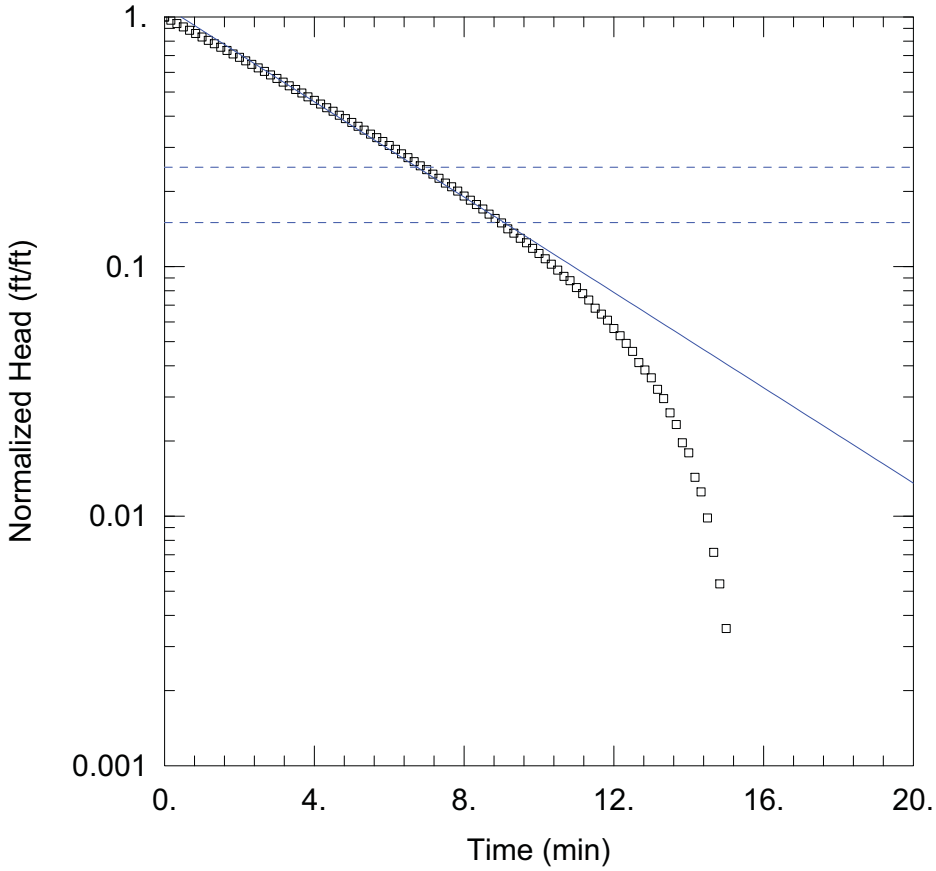

MW-54 TEST 10

Data Set: J:\...\MW-54 T10.aqt
Date: 04/20/07 Time: 11:29:58

PROJECT INFORMATION

Company: GZA GeoEnvironmental
Client: Indian Point Energy Center
Project: 41.0017869.10
Location: Buchanan, New York
Test Well: MW-54 (110.7-120.4)
Test Date: 9/29/06

AQUIFER DATA

Saturated Thickness: 300. ft Anisotropy Ratio (Kz/Kr): 0.1

WELL DATA (MW-54Test 10)

Initial Displacement: 16.07 ft Static Water Column Height: 110.8 ft
Total Well Penetration Depth: 110.8 ft Screen Length: 9.7 ft
Casing Radius: 0.08333 ft Wellbore Radius: 0.159 ft

SOLUTION

Aquifer Model: Unconfined Solution Method: Hvorslev

K = 0.5963 ft/day y0 = 17.71 ft

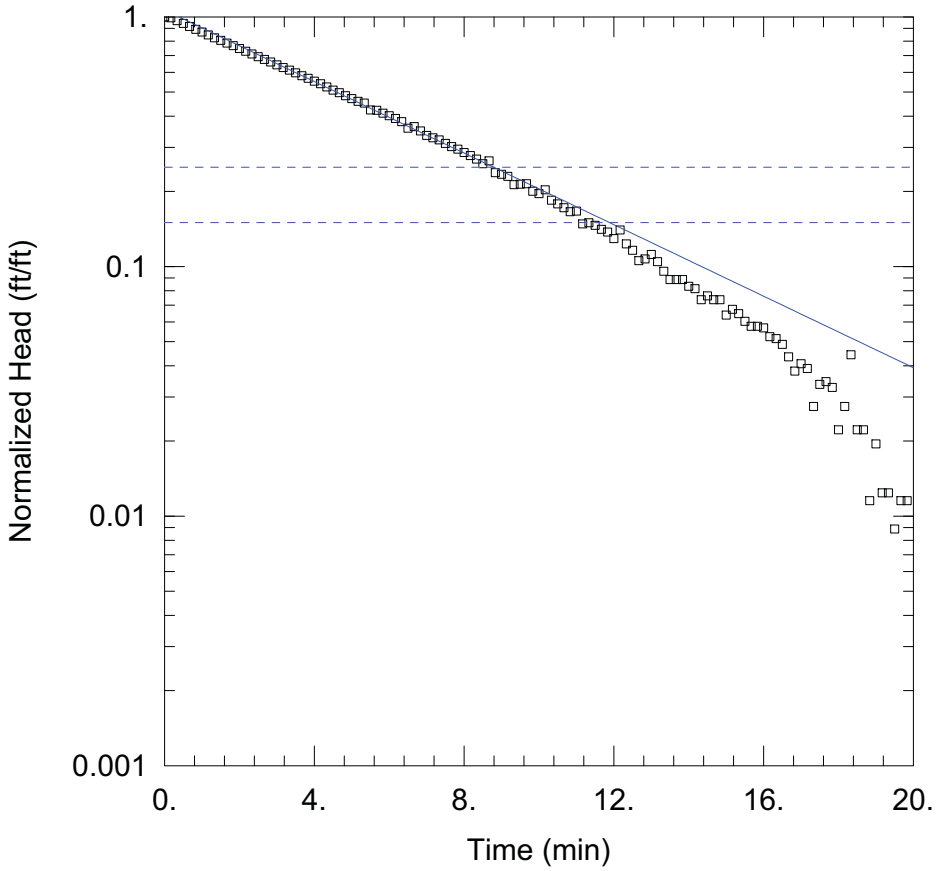

MW-54 TEST 9

Data Set: J:\...\MW-54 T9.aqt
Date: 04/20/07 Time: 11:29:28

PROJECT INFORMATION

Company: GZA GeoEnvironmental
Client: Indian Point Energy Center
Project: 41.0017869.10
Location: Buchanan, New York
Test Well: MW-54 (101.0-110.7))
Test Date: 9/28/06

AQUIFER DATA

Saturated Thickness: 300. ft Anisotropy Ratio (Kz/Kr): 0.1

WELL DATA (MW-54 Test 9)

Initial Displacement: 16.23 ft Static Water Column Height: 101.2 ft
Total Well Penetration Depth: 101.2 ft Screen Length: 9.7 ft
Casing Radius: 0.08333 ft Wellbore Radius: 0.159 ft

SOLUTION

Aquifer Model: Unconfined Solution Method: Hvorslev

K = 0.4475 ft/day y0 = 17.3 ft

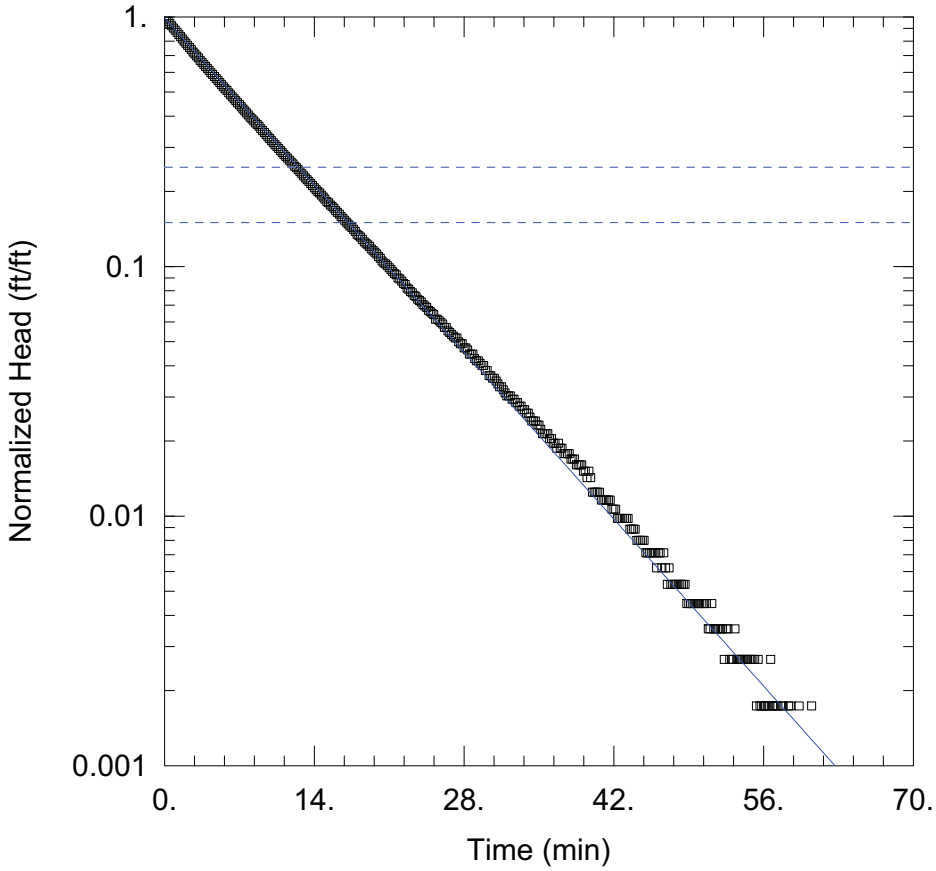

MW-54 TEST 8

Data Set: J:\...\MW-54 T8.aqt
Date: 04/20/07 Time: 11:29:03

PROJECT INFORMATION

Company: GZA GeoEnvironmental
Client: Indian Point Energy Center
Project: 41.0017869.10
Location: Buchanan, New York
Test Well: MW-54 (83.6-93.3)
Test Date: 9/28/06

AQUIFER DATA

Saturated Thickness: 300. ft Anisotropy Ratio (Kz/Kr): 0.1

WELL DATA (MW-54 Test 8)

Initial Displacement: 16.13 ft Static Water Column Height: 83.75 ft
Total Well Penetration Depth: 83.75 ft Screen Length: 9.7 ft
Casing Radius: 0.08333 ft Wellbore Radius: 0.159 ft

SOLUTION

Aquifer Model: Unconfined Solution Method: Hvorslev

K = 0.2985 ft/day y0 = 15.97 ft

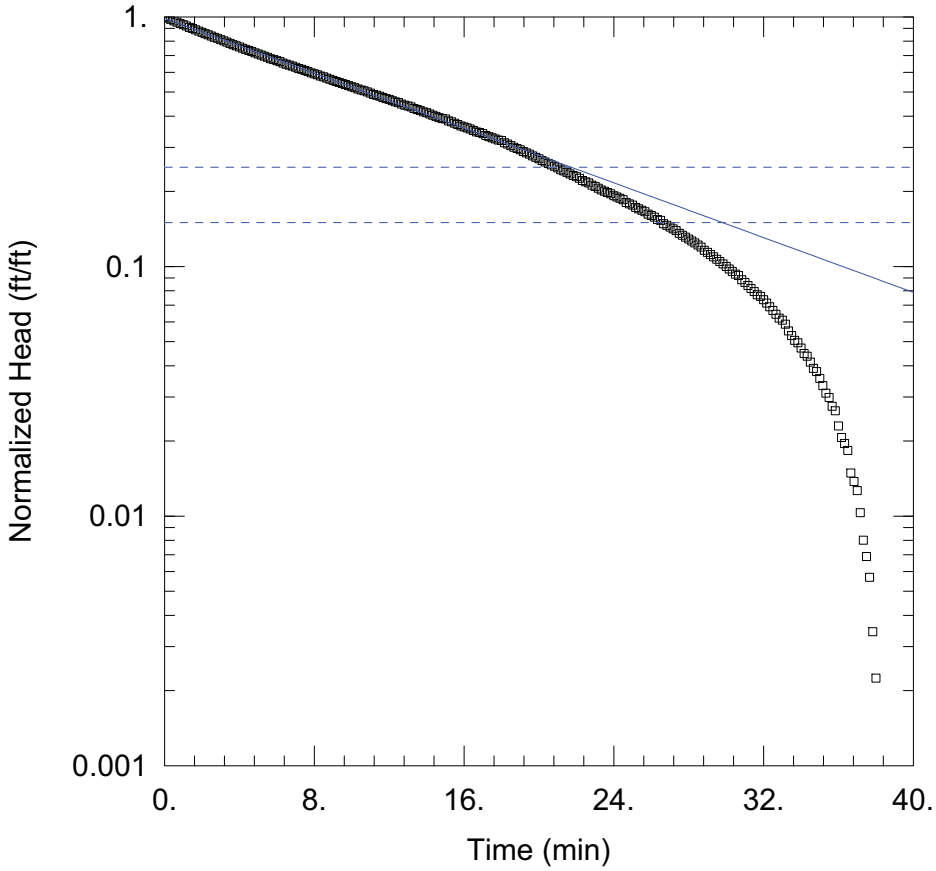

MW-54 TEST 7

Data Set: J:\...\MW-54 T7.aqt
Date: 04/20/07 Time: 11:28:42

PROJECT INFORMATION

Company: GZA GeoEnvironmental
Client: Indian Point Energy Center
Project: 41.0017869.10
Location: Buchanan, New York
Test Well: MW-54 (73.9-83.6)
Test Date: 9/28/06

AQUIFER DATA

Saturated Thickness: 300. ft Anisotropy Ratio (Kz/Kr): 0.1

WELL DATA (MW-54 Test 7)

Initial Displacement: 12.49 ft Static Water Column Height: 74.05 ft
Total Well Penetration Depth: 74.05 ft Screen Length: 9.7 ft
Casing Radius: 0.08333 ft Wellbore Radius: 0.159 ft

SOLUTION

Aquifer Model: Unconfined Solution Method: Hvorslev

K = 0.1713 ft/day y0 = 12.31 ft

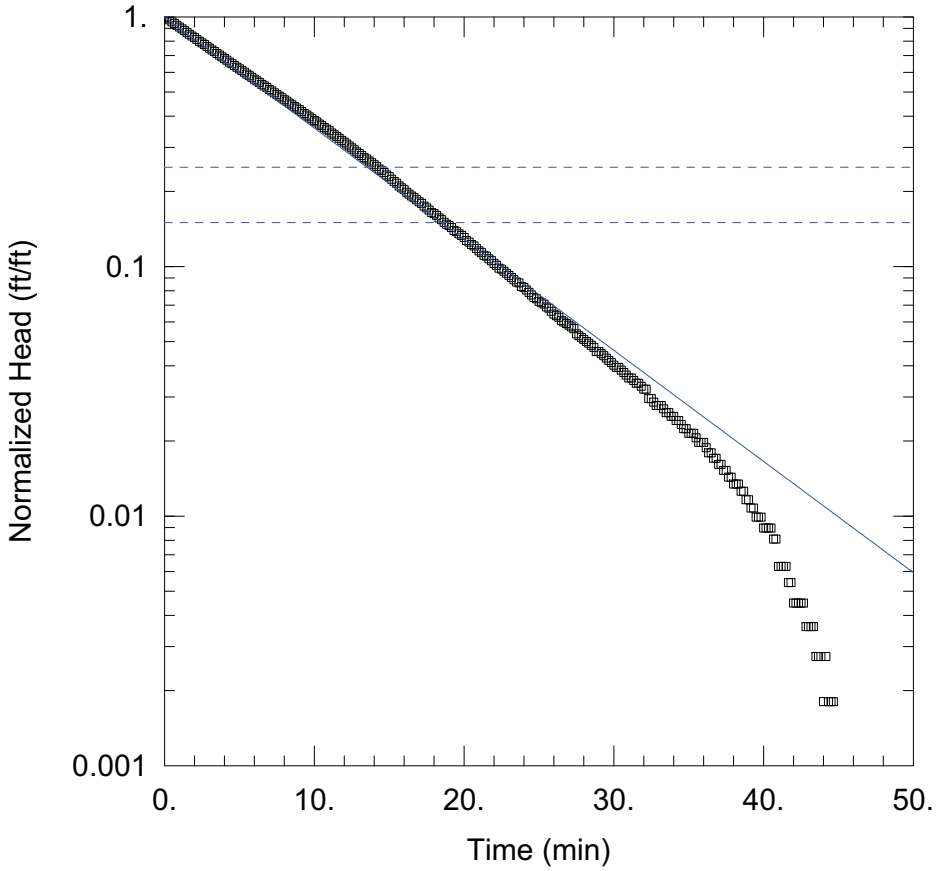

MW-54 TEST6

Data Set: J:\...\MW-54 T6.aqt
Date: 04/20/07 Time: 11:28:13

PROJECT INFORMATION

Company: GZA GeoEnvironmental
Client: Indian Point Energy Center
Project: 41.0017869.10
Location: Buchanan, New York
Test Well: MW-54 (64.2-73.9)
Test Date: 9/28/06

AQUIFER DATA

Saturated Thickness: 300. ft Anisotropy Ratio (Kz/Kr): 0.1

WELL DATA (MW-54 Test 6)

Initial Displacement: 16.06 ft Static Water Column Height: 64.35 ft
Total Well Penetration Depth: 64.35 ft Screen Length: 9.7 ft
Casing Radius: 0.08333 ft Wellbore Radius: 0.159 ft

SOLUTION

Aquifer Model: Unconfined Solution Method: Hvorslev

K = 0.278 ft/day y0 = 16.06 ft

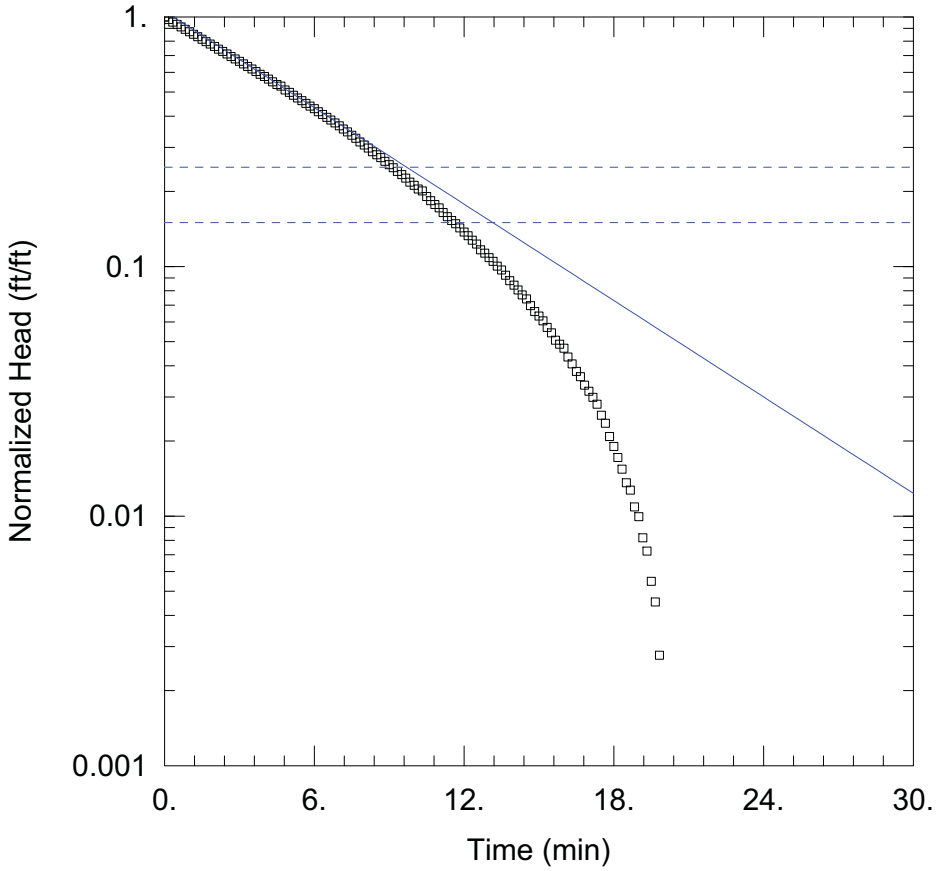

MW-54 TEST5

Data Set: J:\...\MW-54 T5.aqt
Date: 04/20/07 Time: 11:27:46

PROJECT INFORMATION

Company: GZA GeoEnvironmental
Client: Indian Point Energy Center
Project: 41.0017869.10
Location: Buchanan, New York
Test Well: MW-54 (54.5-64.2)
Test Date: 9/28/06

AQUIFER DATA

Saturated Thickness: 300. ft Anisotropy Ratio (Kz/Kr): 0.1

WELL DATA (MW-54 Test 5)

Initial Displacement: 15.89 ft Static Water Column Height: 54.65 ft
Total Well Penetration Depth: 54.65 ft Screen Length: 9.7 ft
Casing Radius: 0.08333 ft Wellbore Radius: 0.159 ft

SOLUTION

Aquifer Model: Unconfined Solution Method: Hvorslev

K = 0.402 ft/day y0 = 16.73 ft

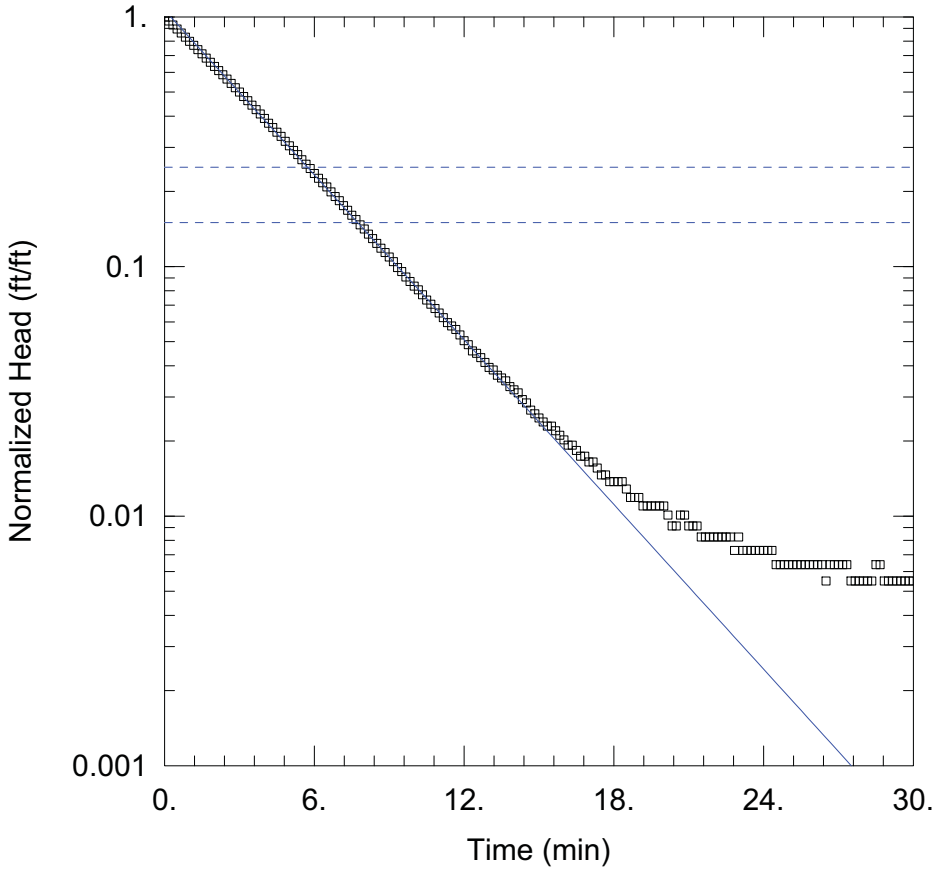

MW-54 TEST4

Data Set: J:\...\MW-54 T4.aqt
Date: 04/20/07 Time: 11:27:23

PROJECT INFORMATION

Company: GZA GeoEnvironmental
Client: Indian Point Energy Center
Project: 41.0017869.10
Location: Buchanan, New York
Test Well: MW-54 (44.8-54.5)
Test Date: 9/27/06

AQUIFER DATA

Saturated Thickness: 300. ft Anisotropy Ratio (Kz/Kr): 0.1

WELL DATA (MW-54 Test 4)

Initial Displacement: 15.65 ft Static Water Column Height: 44.95 ft
Total Well Penetration Depth: 44.95 ft Screen Length: 9.7 ft
Casing Radius: 0.08333 ft Wellbore Radius: 0.159 ft

SOLUTION

Aquifer Model: Unconfined Solution Method: Hvorslev

K = 0.6871 ft/day y0 = 16.67 ft

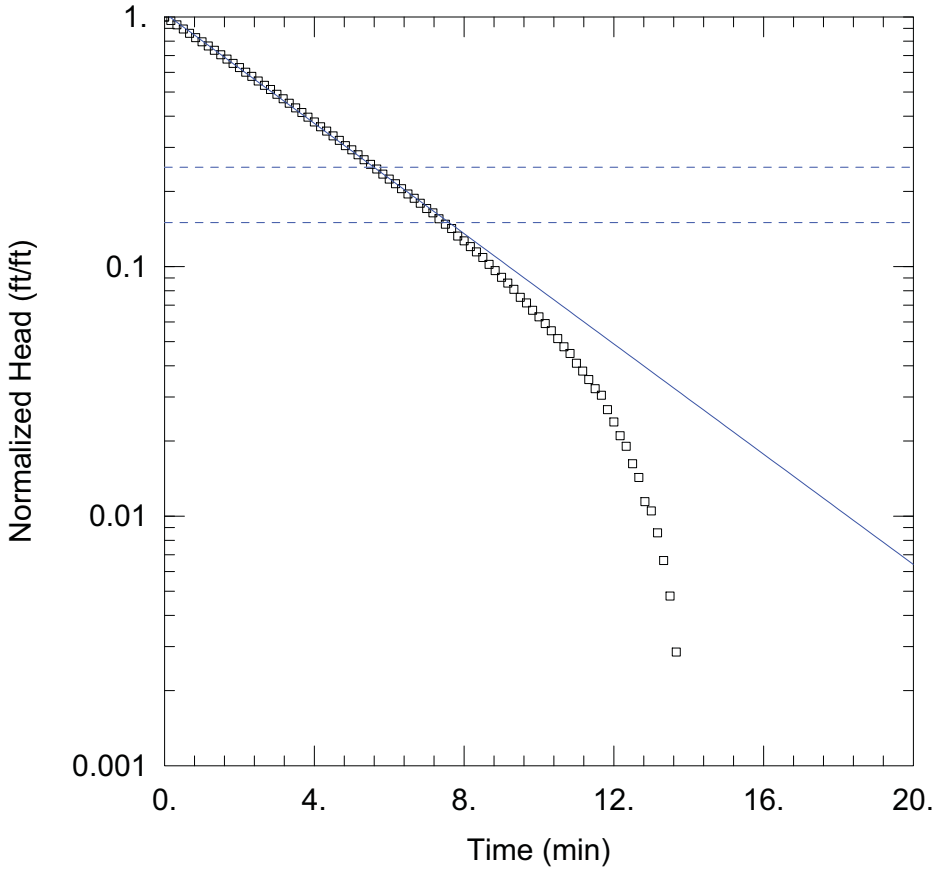

MW-54 TEST3

Data Set: J:\...\MW-54 T3.aqt
Date: 04/20/07 Time: 11:26:58

PROJECT INFORMATION

Company: GZA GeoEnvironmental
Client: Indian Point Energy Center
Project: 41.0017869.10
Location: Buchanan, New York
Test Well: MW-54 (35.1-44.8)
Test Date: 9/28/06

AQUIFER DATA

Saturated Thickness: 300. ft Anisotropy Ratio (Kz/Kr): 0.1

WELL DATA (MW-54 Test 3)

Initial Displacement: 15.06 ft Static Water Column Height: 35.25 ft
Total Well Penetration Depth: 35.25 ft Screen Length: 9.7 ft
Casing Radius: 0.08333 ft Wellbore Radius: 0.159 ft

SOLUTION

Aquifer Model: Unconfined Solution Method: Hvorslev

K = 0.6897 ft/day y0 = 15.6 ft

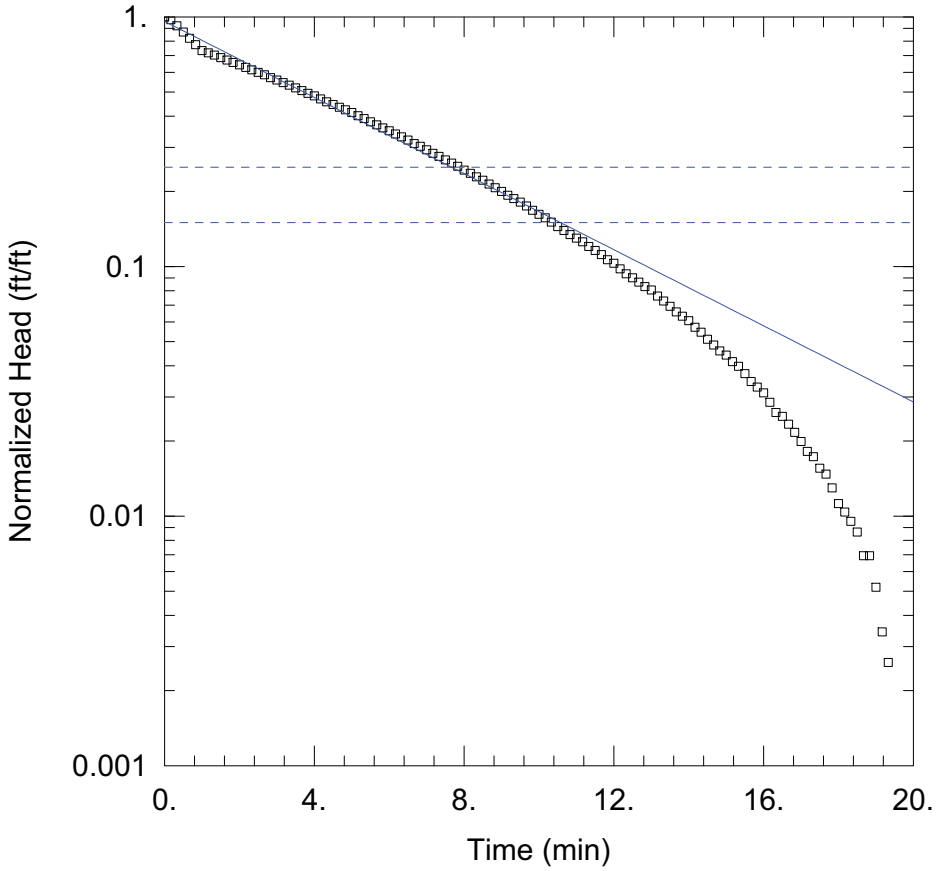

MW-54 TEST2

Data Set: J:\...\MW-54 T2.aqt
Date: 04/20/07 Time: 11:26:30

PROJECT INFORMATION

Company: GZA GeoEnvironmental
Client: Indian Point Energy Center
Project: 41.0017869.10
Location: Buchanan, New York
Test Well: MW-54 (24.2-33.9)
Test Date: 9/26/06

AQUIFER DATA

Saturated Thickness: 300. ft Anisotropy Ratio (Kz/Kr): 0.1

WELL DATA (MW-54 Test 2)

Initial Displacement: 16.57 ft Static Water Column Height: 24.35 ft
Total Well Penetration Depth: 24.35 ft Screen Length: 9.8 ft
Casing Radius: 0.08333 ft Wellbore Radius: 0.159 ft

SOLUTION

Aquifer Model: Unconfined Solution Method: Hvorslev

K = 0.4722 ft/day y0 = 15.92 ft

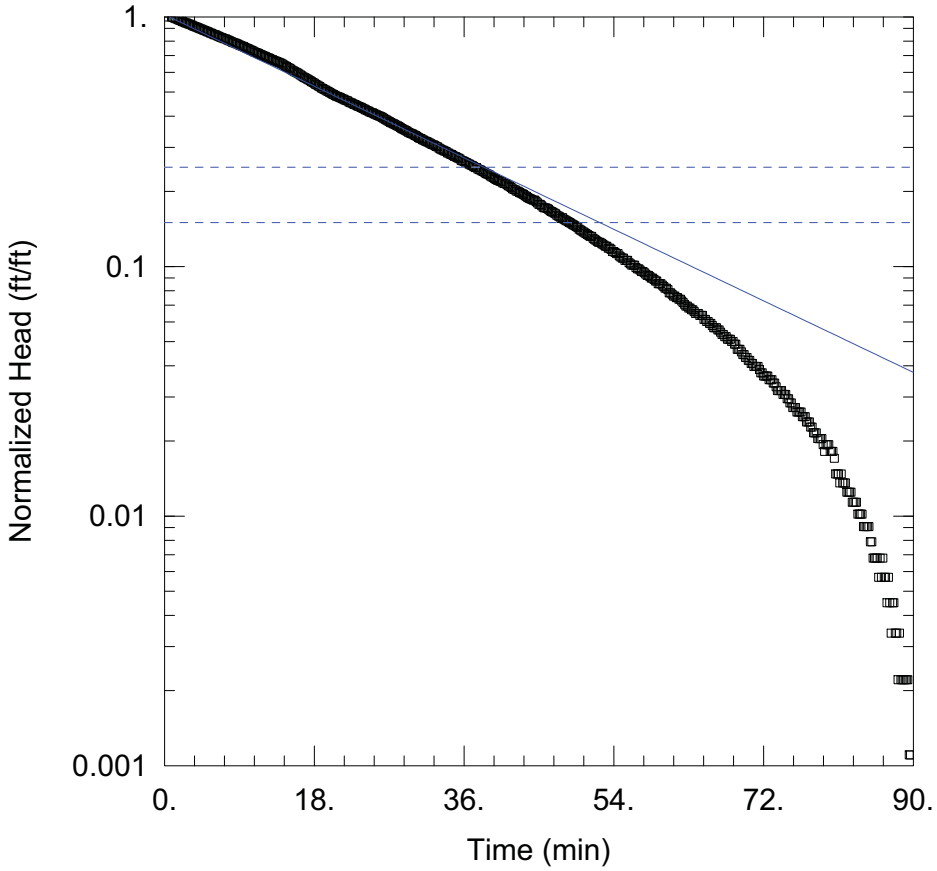

MW-54 TEST1

Data Set: J:\...\MW-54 T1.aqt
Date: 04/20/07 Time: 11:25:57

PROJECT INFORMATION

Company: GZA GeoEnvironmental
Client: Indian Point Energy Center
Project: 41.0017869.10
Location: Buchanan, New York
Test Well: MW-54 (20.5-24)
Test Date: 9/26/06

AQUIFER DATA

Saturated Thickness: 300. ft Anisotropy Ratio (Kz/Kr): 0.1

WELL DATA (MW-54 Test 1)

Initial Displacement: 12.67 ft Static Water Column Height: 14.45 ft
Total Well Penetration Depth: 14.45 ft Screen Length: 3.5 ft
Casing Radius: 0.08333 ft Wellbore Radius: 0.159 ft

SOLUTION

Aquifer Model: Unconfined Solution Method: Hvorslev

K = 0.2222 ft/day y0 = 12.93 ft

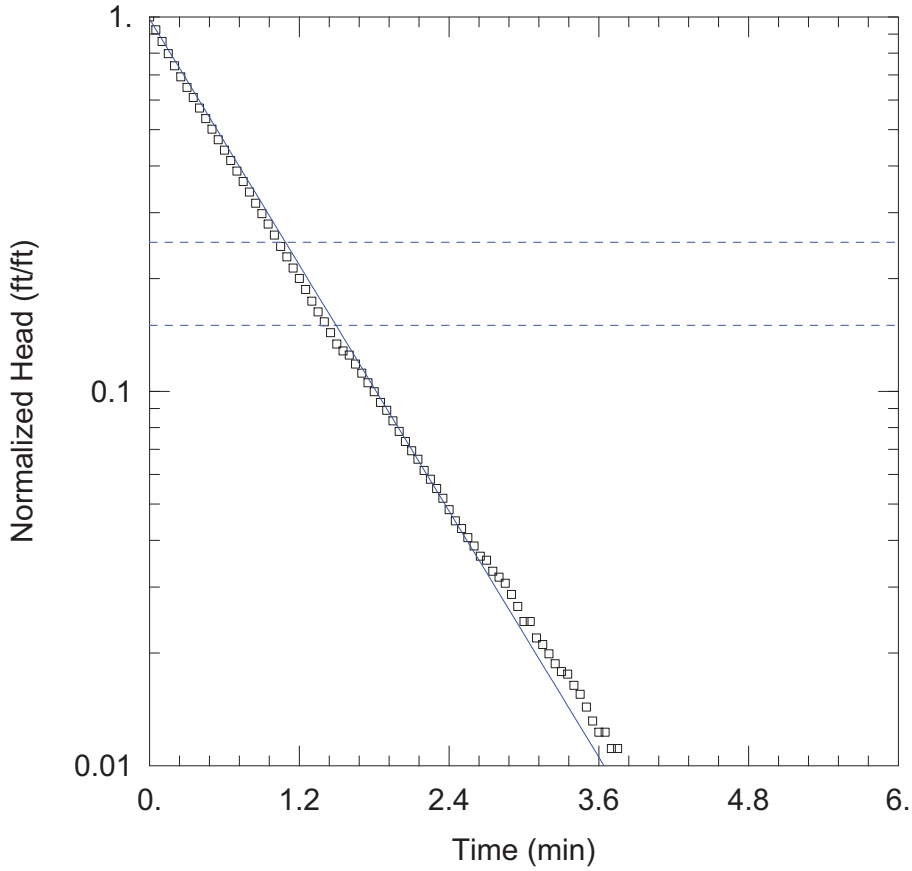

MW55-24 SLUG TEST 2

Data Set: J:\...\MW55-24-2.aqt
Date: 09/12/07 Time: 14:15:16

PROJECT INFORMATION

Company: GZA GeoEnvironmental
Client: Indian Point Energy Center
Project: 41.0017869.10
Location: Buchanan, New York
Test Well: MW55-24
Test Date: 12/27/06

AQUIFER DATA

Saturated Thickness: 300. ft Anisotropy Ratio (Kz/Kr): 0.1

WELL DATA (MW-55-24)

Initial Displacement: 3.417 ft Static Water Column Height: 14.48 ft
Total Well Penetration Depth: 14.48 ft Screen Length: 13. ft
Casing Radius: 0.04167 ft Wellbore Radius: 0.159 ft

SOLUTION

Aquifer Model: Unconfined Solution Method: Hvorslev

K = 0.6737 ft/day y0 = 3.376 ft

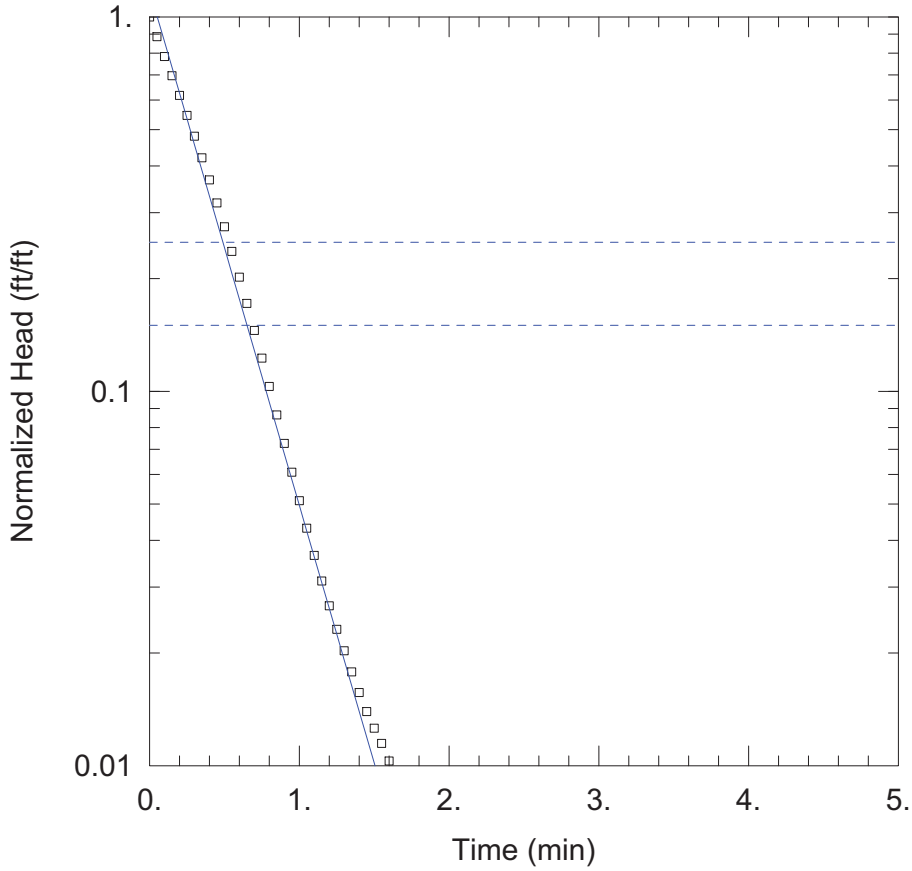

MW55-35 SLUG TEST

Data Set: J:\...\MW55-35.aqt
Date: 09/12/07 Time: 14:15:52

PROJECT INFORMATION

Company: GZA GeoEnvironmental
Client: Indian Point Energy Center
Project: 41.0017869.10
Location: Buchanan, New York
Test Well: MW55-24
Test Date: 12/27/06

AQUIFER DATA

Saturated Thickness: 300. ft Anisotropy Ratio (Kz/Kr): 0.1

WELL DATA (MW-55-35)

Initial Displacement: 16.12 ft Static Water Column Height: 25.12 ft
Total Well Penetration Depth: 25.12 ft Screen Length: 8. ft
Casing Radius: 0.04167 ft Wellbore Radius: 0.159 ft

SOLUTION

Aquifer Model: Unconfined Solution Method: Hvorslev

K = 2.51 ft/day y0 = 19.03 ft

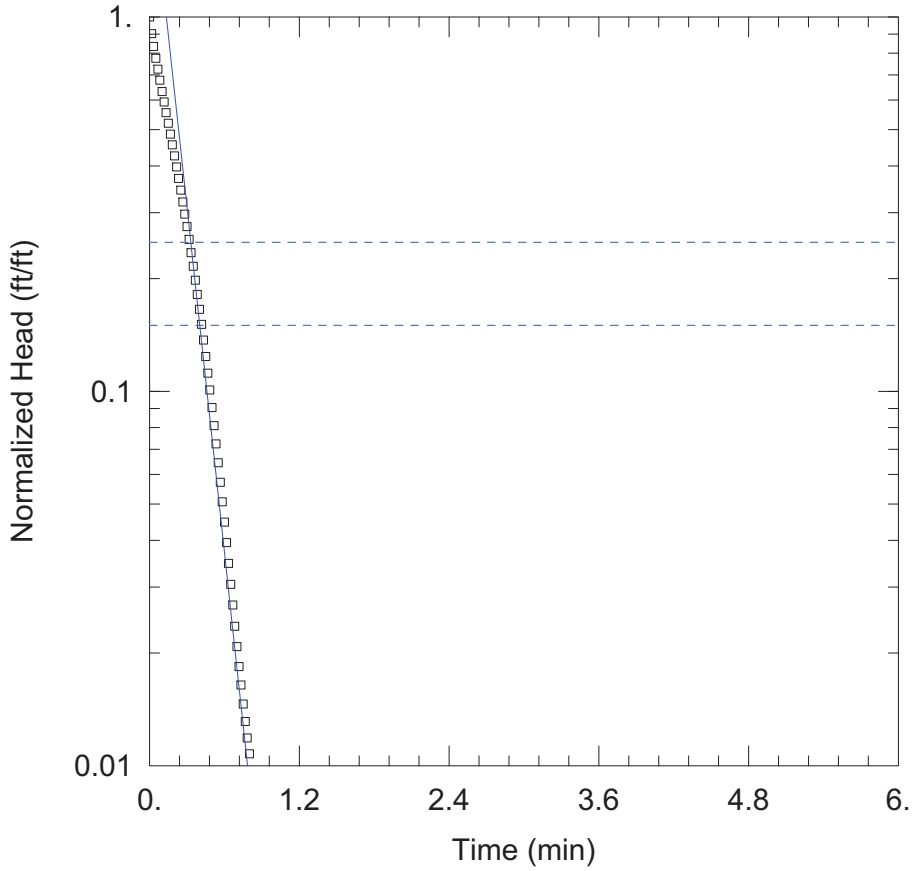

MW55-54 SLUG TEST

Data Set: J:\...\MW55-54.aqt
Date: 09/12/07 Time: 14:16:09

PROJECT INFORMATION

Company: GZA GeoEnvironmental
Client: Indian Point Energy Center
Project: 41.0017869.10
Location: Buchanan, New York
Test Well: MW55-54
Test Date: 12/27/06

AQUIFER DATA

Saturated Thickness: 300. ft
Anisotropy Ratio (Kz/Kr): 0.1

WELL DATA (MW-55-54)

Initial Displacement: 25.38 ft
Total Well Penetration Depth: 44.4 ft
Casing Radius: 0.04167 ft
Static Water Column Height: 44.4 ft
Screen Length: 13. ft
Wellbore Radius: 0.159 ft

SOLUTION

Aquifer Model: Unconfined
Solution Method: Hvorslev

K = 3.778 ft/day
y0 = 65.78 ft

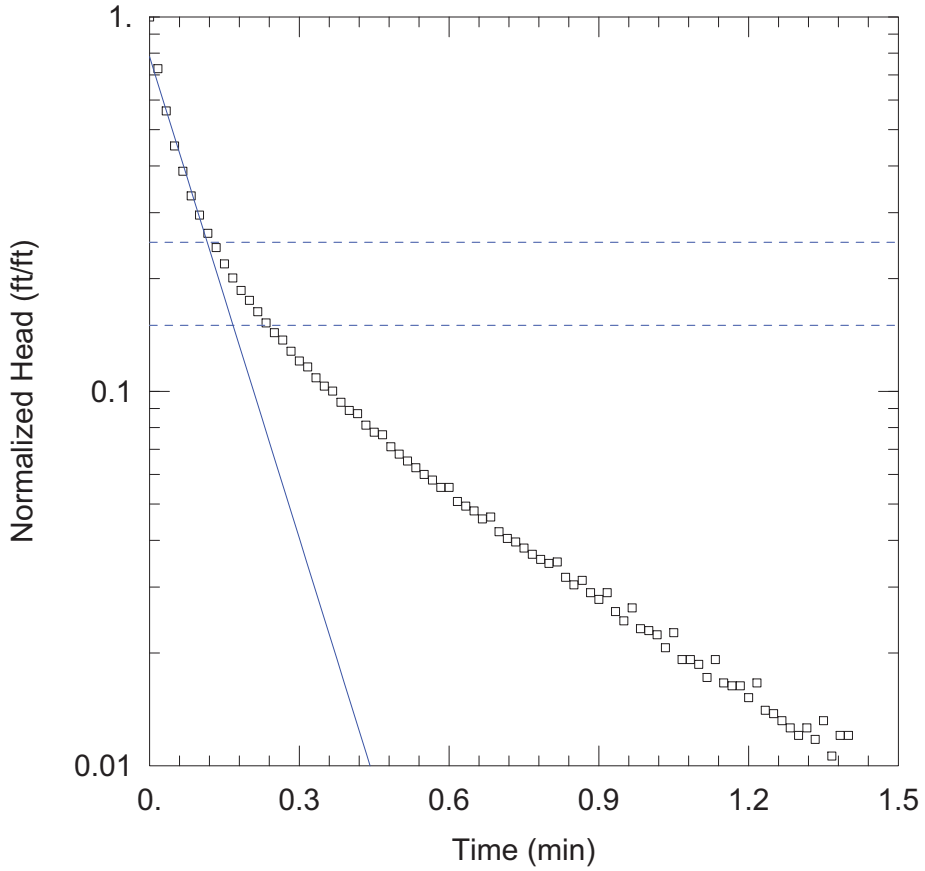

MW56-85 SLUG TEST

Data Set: J:\...\MW56-85.aqt
Date: 09/12/07 Time: 14:18:18

PROJECT INFORMATION

Company: GZA GeoEnvironmental
Client: Indian Point Energy Center
Project: 41.0017869.10
Location: Buchanan, New York
Test Well: MW56-85
Test Date: 12/28/06

AQUIFER DATA

Saturated Thickness: 300. ft
Anisotropy Ratio (Kz/Kr): 0.1

WELL DATA (MW-56-85)

Initial Displacement: 3.486 ft
Total Well Penetration Depth: 39.2 ft
Casing Radius: 0.04167 ft
Static Water Column Height: 39.2 ft
Screen Length: 19. ft
Wellbore Radius: 0.159 ft

SOLUTION

Aquifer Model: Unconfined
Solution Method: Hvorslev

K = 3.854 ft/day
y0 = 2.73 ft

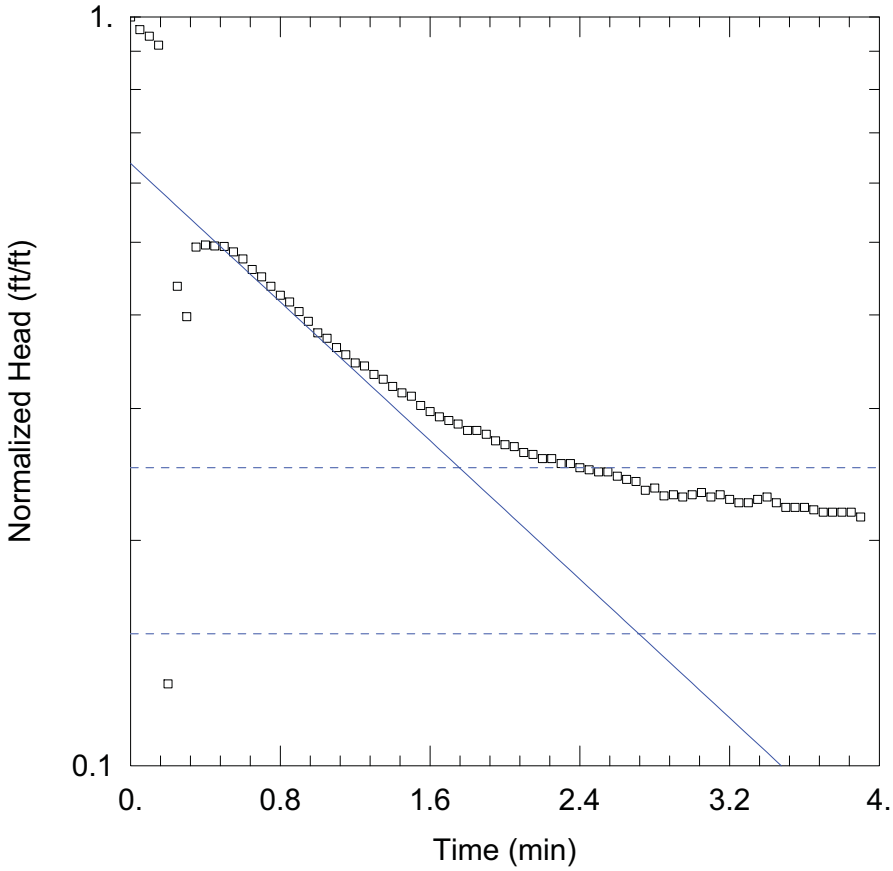

MW57-11 SLUG TEST

Data Set: J:\...\MW57-11.aqt
Date: 04/20/07 Time: 12:05:37

PROJECT INFORMATION

Company: GZA GeoEnvironmental
Client: Indian Point Energy Center
Project: 41.0017869.10
Location: Buchanan, New York
Test Well: MW57-11
Test Date: 12/26/06

AQUIFER DATA

Saturated Thickness: 300. ft
Anisotropy Ratio (Kz/Kr): 0.1

WELL DATA (MW-57-11)

Initial Displacement: 1.252 ft
Static Water Column Height: 6.6 ft
Total Well Penetration Depth: 6.6 ft
Screen Length: 9. ft
Casing Radius: 0.04167 ft
Wellbore Radius: 0.159 ft

SOLUTION

Aquifer Model: Unconfined
Solution Method: Hvorslev

K = 0.3839 ft/day
y0 = 0.7981 ft

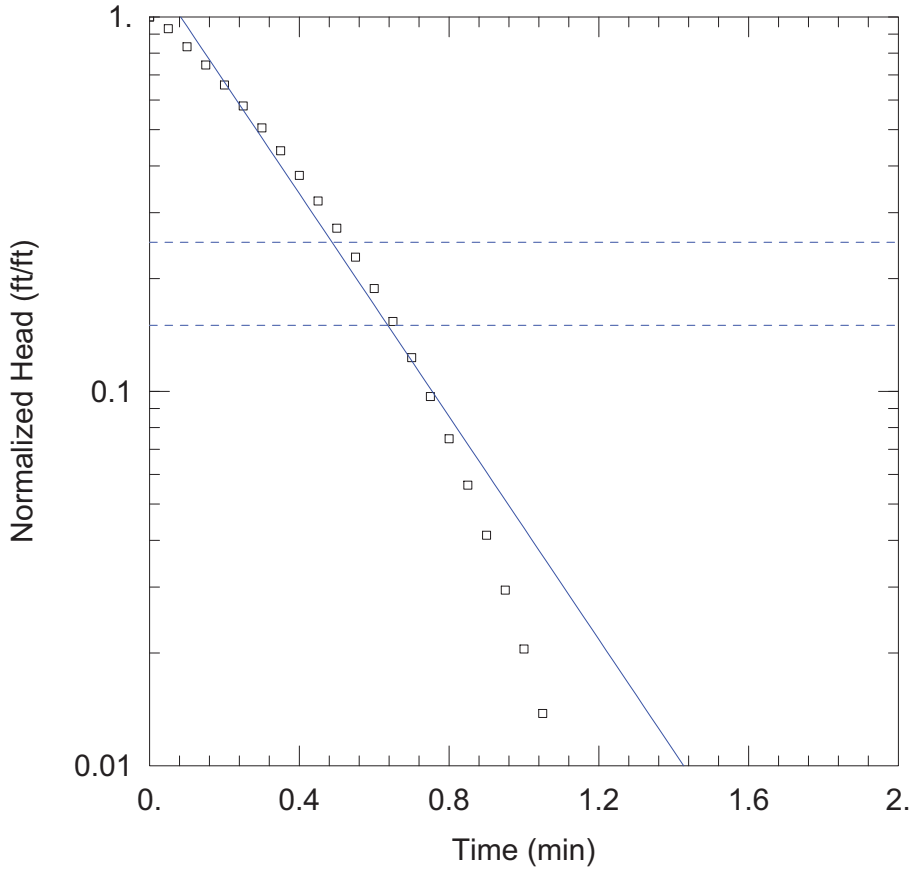

MW57-20 SLUG TEST

Data Set: J:\...\MW57-20.aqt
Date: 09/12/07 Time: 14:20:30

PROJECT INFORMATION

Company: GZA GeoEnvironmental
Client: Indian Point Energy Center
Project: 41.0017869.10
Location: Buchanan, New York
Test Well: MW57-20
Test Date: 12/26/06

AQUIFER DATA

Saturated Thickness: 300. ft
Anisotropy Ratio (Kz/Kr): 0.1

WELL DATA (MW-57-20)

Initial Displacement: 8.046 ft
Total Well Penetration Depth: 15.4 ft
Casing Radius: 0.04167 ft
Static Water Column Height: 15.4 ft
Screen Length: 6. ft
Wellbore Radius: 0.159 ft

SOLUTION

Aquifer Model: Unconfined
Solution Method: Hvorslev

K = 3.415 ft/day
y0 = 10.7 ft

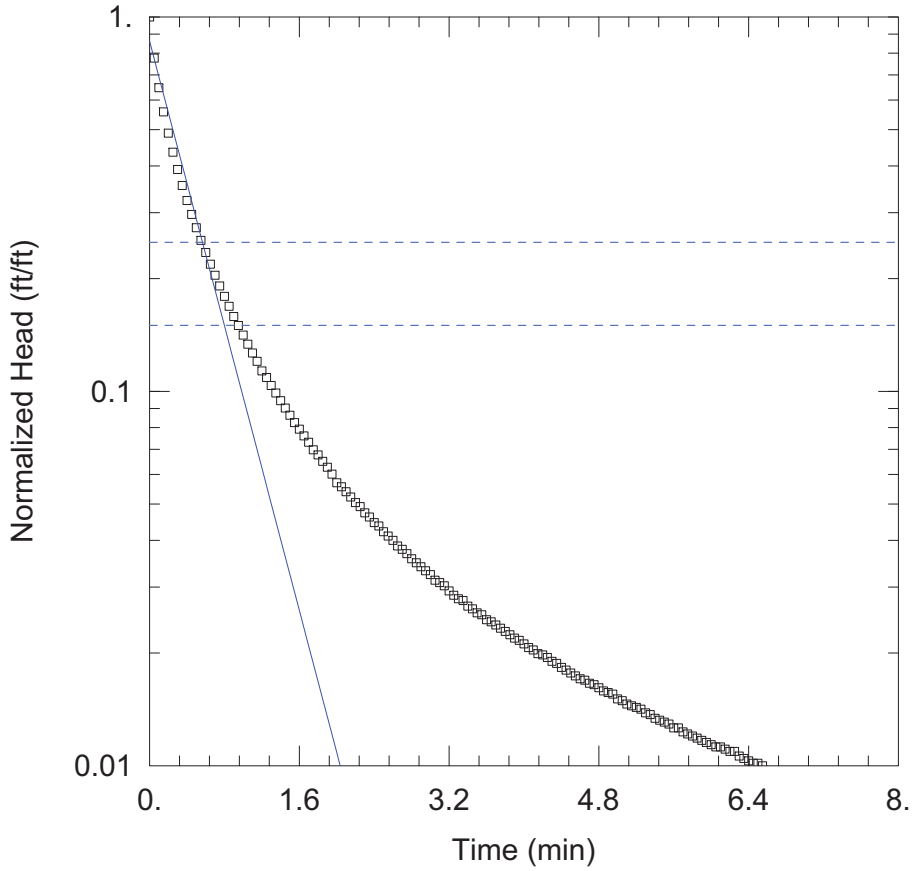

MW57-45 SLUG TEST

Data Set: J:\...\MW57-45.aqt
Date: 09/12/07 Time: 14:20:20

PROJECT INFORMATION

Company: GZA GeoEnvironmental
Client: Indian Point Energy Center
Project: 41.0017869.10
Location: Buchanan, New York
Test Well: MW57-45
Test Date: 12/26/06

AQUIFER DATA

Saturated Thickness: 300. ft
Anisotropy Ratio (Kz/Kr): 0.1

WELL DATA (MW-57-45)

Initial Displacement: 13. ft
Total Well Penetration Depth: 40.7 ft
Casing Radius: 0.04167 ft
Static Water Column Height: 40.7 ft
Screen Length: 18. ft
Wellbore Radius: 0.159 ft

SOLUTION

Aquifer Model: Unconfined
Solution Method: Hvorslev

K = 0.8935 ft/day
y0 = 11.21 ft

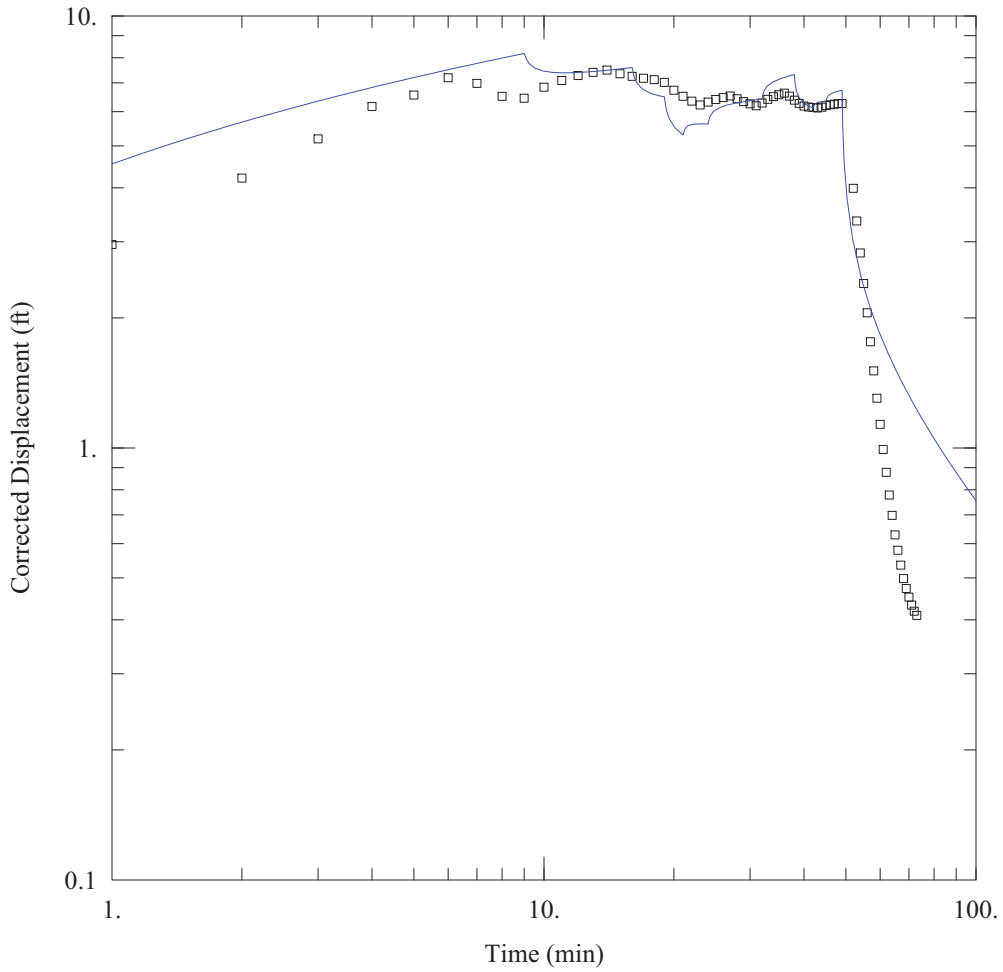

MW-58-25 EXTRACTION

Data Set: J:\...\MW-58-25 theis.aqt
Date: 09/12/07 Time: 14:22:02

PROJECT INFORMATION

Company: GZA GeoEnvironmental
Client: Indian Point Energy Center
Project: 41.0017869.10
Location: Buchanan, NY
Test Well: MW-58-25
Test Date: 12/19/06

WELL DATA

Pumping Wells

Well Name	X (ft)	Y (ft)
MW-58-25	0	0

Observation Wells

Well Name	X (ft)	Y (ft)
▫ MW-58-25	0	0

SOLUTION

Aquifer Model: Unconfined
Solution Method: Theis

T = 4.549 ft^2/day
S = 0.01966
Kz/Kr = 1.
b = 300. ft

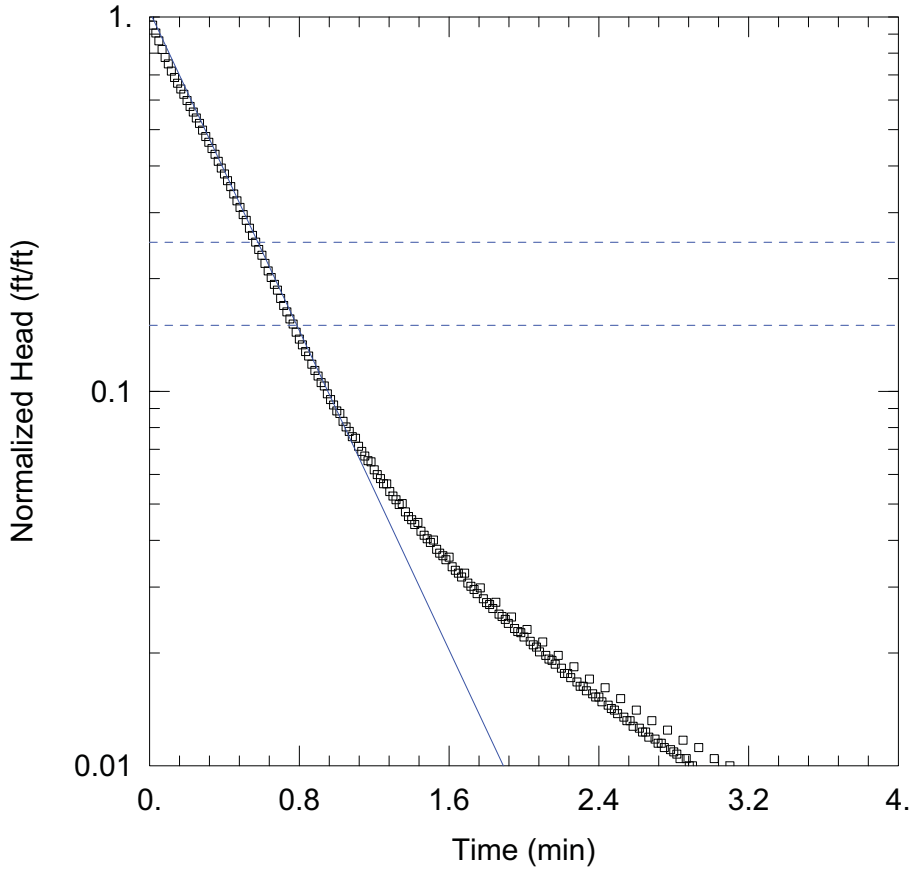

MW58-65 SLUG TEST

Data Set: J:\...\MW58-65.redo.aqt
Date: 04/26/07 Time: 23:23:46

PROJECT INFORMATION

Company: GZA GeoEnvironmental
Client: Indian Point Energy Center
Project: 41.0017869.10
Location: Buchanan, New York
Test Well: MW58-65
Test Date: 1/2/07

AQUIFER DATA

Saturated Thickness: 300. ft
Anisotropy Ratio (Kz/Kr): 0.1

WELL DATA (MW-58-65)

Initial Displacement: 13.5 ft
Static Water Column Height: 59.6 ft
Total Well Penetration Depth: 59.6 ft
Screen Length: 19. ft
Casing Radius: 0.04167 ft
Wellbore Radius: 0.159 ft

SOLUTION

Aquifer Model: Unconfined
Solution Method: Hvorslev

K = 0.9583 ft/day
y0 = 13.98 ft

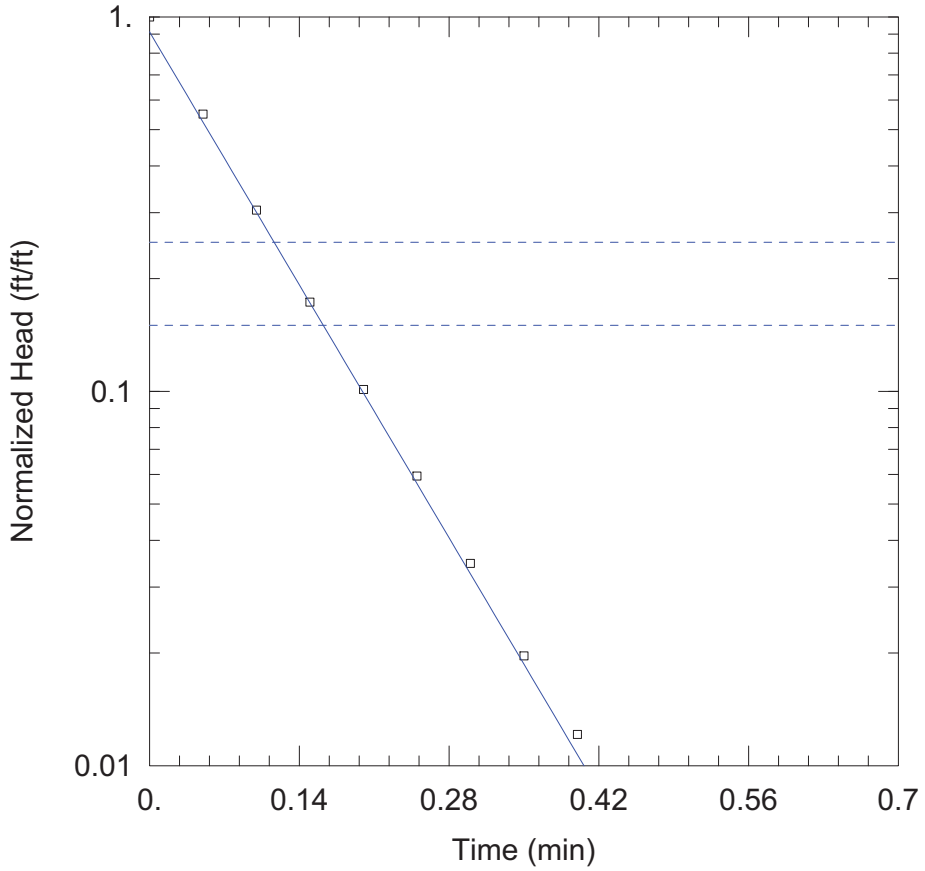

MW59-31 SLUG TEST

Data Set: J:\...\MW59-31.aqt
Date: 09/12/07 Time: 14:23:31

PROJECT INFORMATION

Company: GZA GeoEnvironmental
Client: Indian Point Energy Center
Project: 41.0017869.10
Location: Buchanan, New York
Test Well: MW59-31
Test Date: 12/26/06

AQUIFER DATA

Saturated Thickness: 300. ft Anisotropy Ratio (Kz/Kr): 0.1

WELL DATA (MW-59-31)

Initial Displacement: 2.392 ft Static Water Column Height: 20.36 ft
Total Well Penetration Depth: 20.36 ft Screen Length: 13. ft
Casing Radius: 0.04167 ft Wellbore Radius: 0.159 ft

SOLUTION

Aquifer Model: Unconfined Solution Method: Hvorslev

K = 5.936 ft/day y0 = 2.183 ft

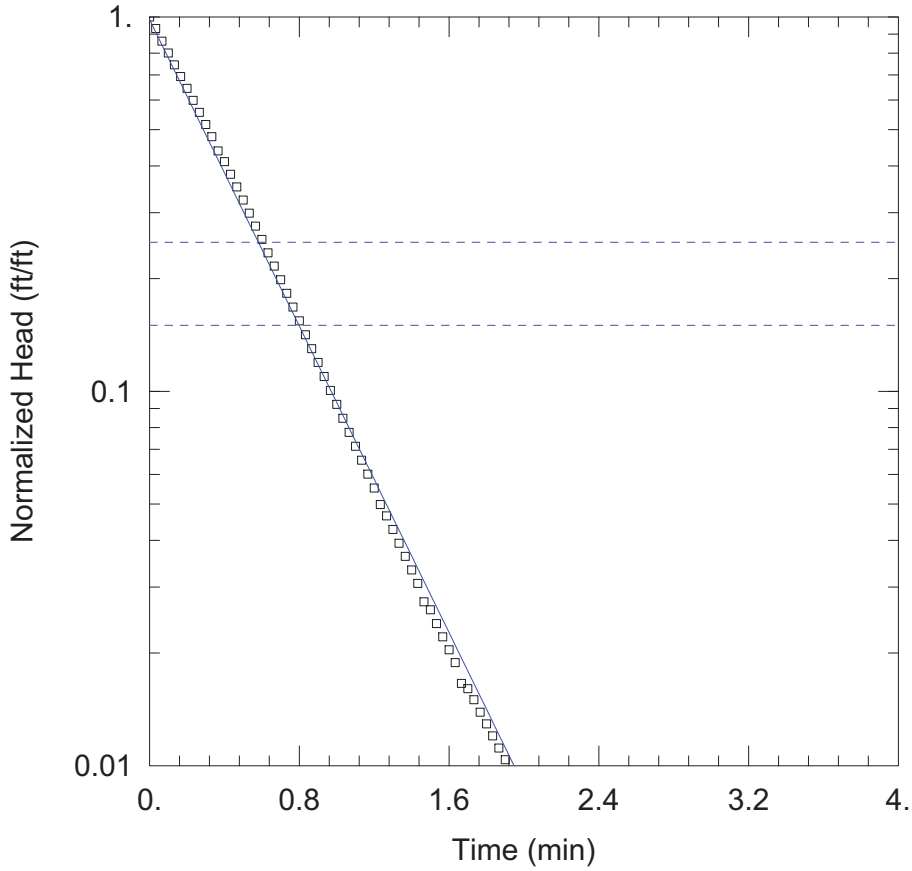

MW59-45 SLUG TEST

Data Set: J:\...\MW59-45.aqt
Date: 09/12/07 Time: 14:23:47

PROJECT INFORMATION

Company: GZA GeoEnvironmental
Client: Indian Point Energy Center
Project: 41.0017869.10
Location: Buchanan, New York
Test Well: MW59-45
Test Date: 12/21/06

AQUIFER DATA

Saturated Thickness: 300. ft
Anisotropy Ratio (Kz/Kr): 0.1

WELL DATA (MW-59-45)

Initial Displacement: 20.73 ft
Total Well Penetration Depth: 36.4 ft
Casing Radius: 0.04167 ft
Static Water Column Height: 36.4 ft
Screen Length: 8. ft
Wellbore Radius: 0.159 ft

SOLUTION

Aquifer Model: Unconfined
Solution Method: Hvorslev

K = 1.867 ft/day
y0 = 20.4 ft

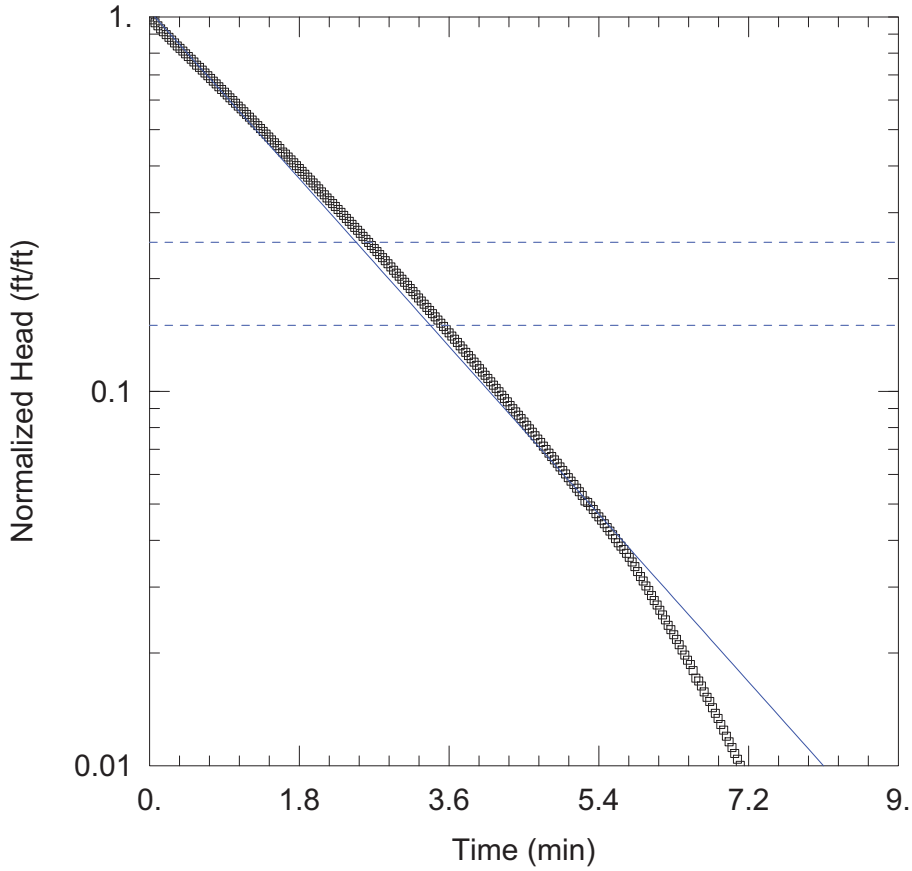

MW59-68 SLUG TEST

Data Set: J:\...\MW59-68.aqt
Date: 09/12/07 Time: 14:24:00

PROJECT INFORMATION

Company: GZA GeoEnvironmental
Client: Indian Point Energy Center
Project: 41.0017869.10
Location: Buchanan, New York
Test Well: MW59-45
Test Date: 12/21/06

AQUIFER DATA

Saturated Thickness: 300. ft
Anisotropy Ratio (Kz/Kr): 0.1

WELL DATA (MW-59-68)

Initial Displacement: 37.1 ft
Total Well Penetration Depth: 58. ft
Casing Radius: 0.04167 ft
Static Water Column Height: 58. ft
Screen Length: 18. ft
Wellbore Radius: 0.159 ft

SOLUTION

Aquifer Model: Unconfined
Solution Method: Hvorslev

K = 0.234 ft/day
y0 = 38.51 ft

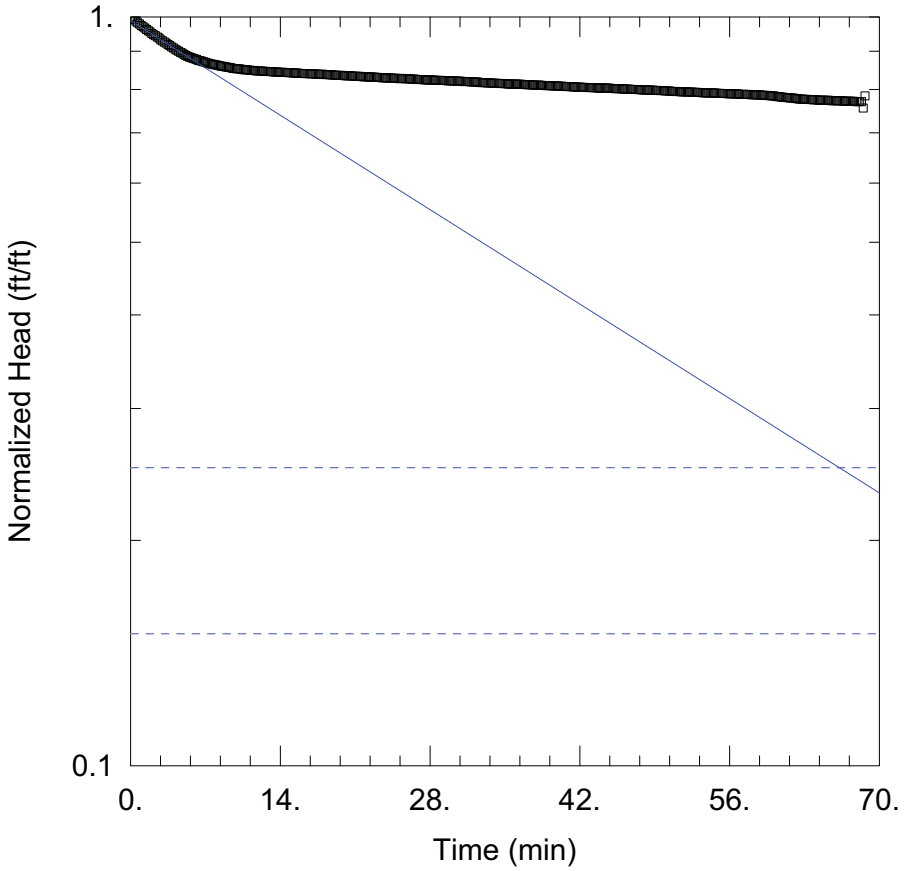

MW-60 TEST1

Data Set: J:\...\MW-60 T1.aqt
Date: 04/26/07 Time: 23:17:28

PROJECT INFORMATION

Company: GZA GeoEnvironmental
Client: Indian Point Energy Center
Project: 41.0017869.10
Location: Buchanan, New York
Test Well: MW-60 (188.2-202.0)
Test Date: 12/7/06

AQUIFER DATA

Saturated Thickness: 300. ft Anisotropy Ratio (Kz/Kr): 0.1

WELL DATA (MW-60 Test 1)

Initial Displacement: 24.8 ft Static Water Column Height: 190.7 ft
Total Well Penetration Depth: 190.7 ft Screen Length: 13.8 ft
Casing Radius: 0.08333 ft Wellbore Radius: 0.159 ft

SOLUTION

Aquifer Model: Unconfined Solution Method: Hvorslev

K = 0.04219 ft/day y0 = 24.51 ft

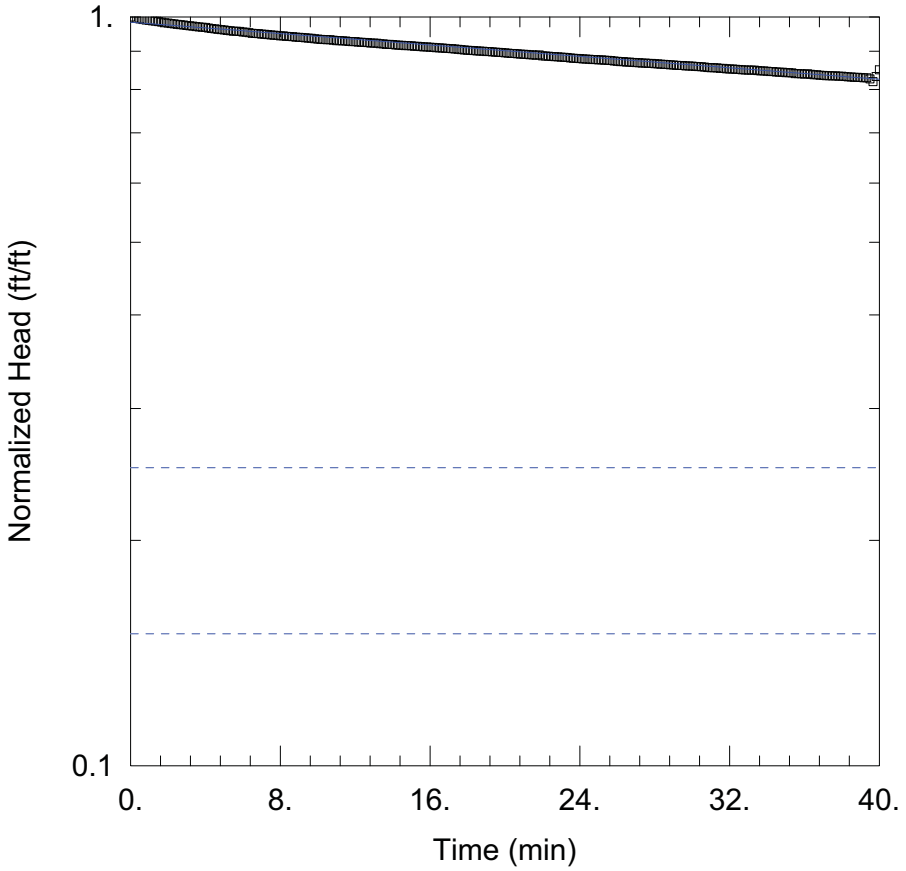

MW-60 TEST2

Data Set: J:\...\MW-60 T2.aqt
Date: 04/23/07 Time: 16:18:12

PROJECT INFORMATION

Company: GZA GeoEnvironmental
Client: Indian Point Energy Center
Project: 41.0017869.10
Location: Buchanan, New York
Test Well: MW-60 (172.3-182.0)
Test Date: 12/7/06

AQUIFER DATA

Saturated Thickness: 300. ft Anisotropy Ratio (Kz/Kr): 0.1

WELL DATA (MW-60 Test 2)

Initial Displacement: 24.42 ft Static Water Column Height: 170.1 ft
Total Well Penetration Depth: 170.1 ft Screen Length: 9.7 ft
Casing Radius: 0.08333 ft Wellbore Radius: 0.159 ft

SOLUTION

Aquifer Model: Unconfined Solution Method: Hvorslev

K = 0.01189 ft/day y0 = 24.02 ft

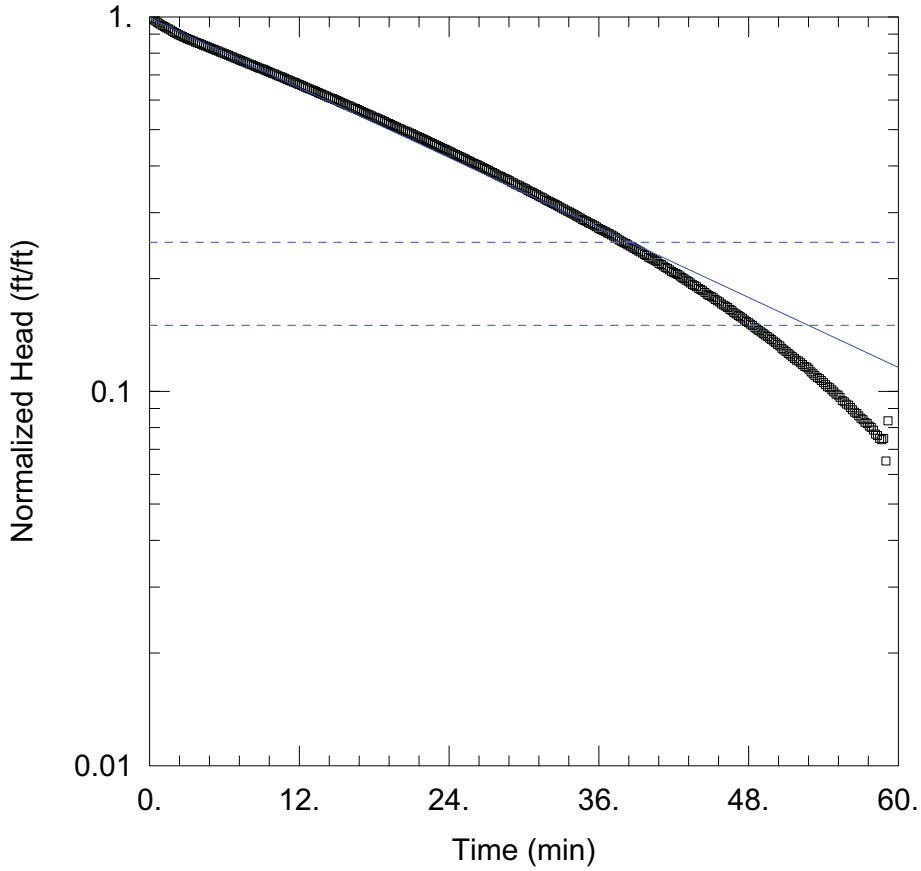

MW-60 TEST3

Data Set: J:\...\MW-60 T3.aqt
Date: 04/26/07 Time: 23:17:45

PROJECT INFORMATION

Company: GZA GeoEnvironmental
Client: Indian Point Energy Center
Project: 41.0017869.10
Location: Buchanan, New York
Test Well: MW-60 (161.3-171)
Test Date: 12/11/06

AQUIFER DATA

Saturated Thickness: 300. ft Anisotropy Ratio (Kz/Kr): 0.1

WELL DATA (MW-60 Test 3)

Initial Displacement: 22.13 ft Static Water Column Height: 157.1 ft
Total Well Penetration Depth: 157.1 ft Screen Length: 9.7 ft
Casing Radius: 0.08333 ft Wellbore Radius: 0.159 ft

SOLUTION

Aquifer Model: Unconfined Solution Method: Hvorslev

K = 0.09717 ft/day y0 = 22.01 ft

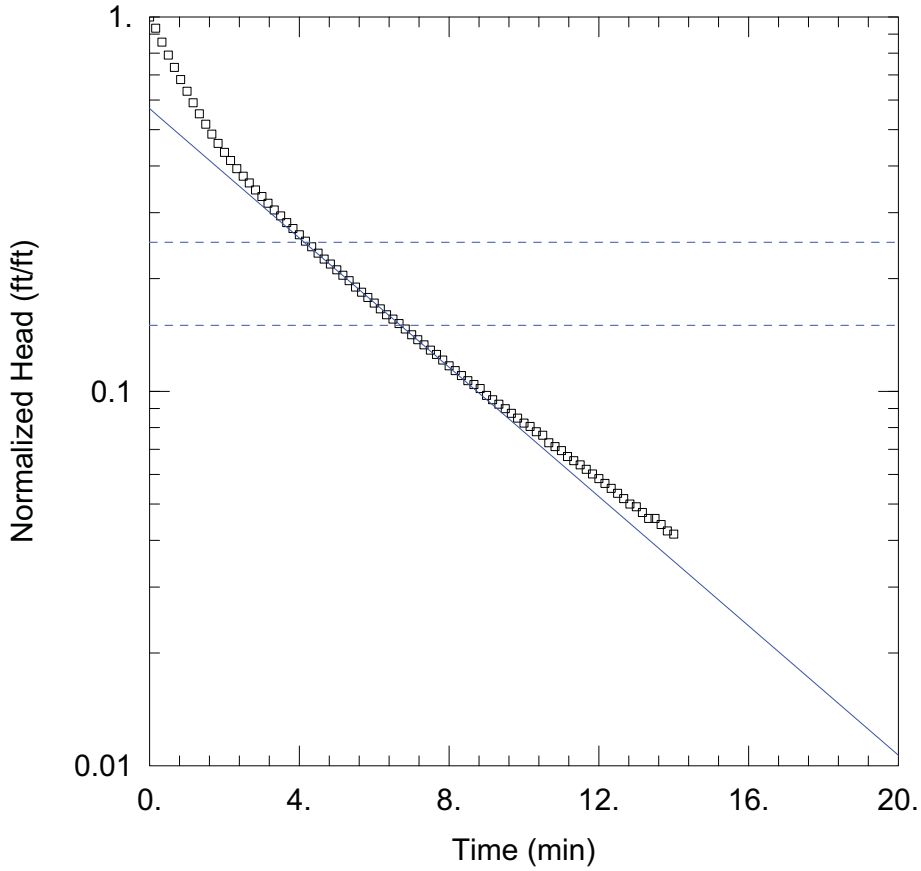

MW-60 TEST4

Data Set: J:\...\MW-60 T4.aqt
Date: 04/26/07 Time: 23:17:52

PROJECT INFORMATION

Company: GZA GeoEnvironmental
Client: Indian Point Energy Center
Project: 41.0017869.10
Location: Buchanan, New York
Test Well: MW-60 (151.3-161)
Test Date: 12/11/06

AQUIFER DATA

Saturated Thickness: 300. ft Anisotropy Ratio (Kz/Kr): 0.1

WELL DATA (MW-60 Test 4)

Initial Displacement: 17. ft Static Water Column Height: 147.5 ft
Total Well Penetration Depth: 147.5 ft Screen Length: 9.7 ft
Casing Radius: 0.08333 ft Wellbore Radius: 0.159 ft

SOLUTION

Aquifer Model: Unconfined Solution Method: Hvorslev

K = 0.5393 ft/day y0 = 9.673 ft

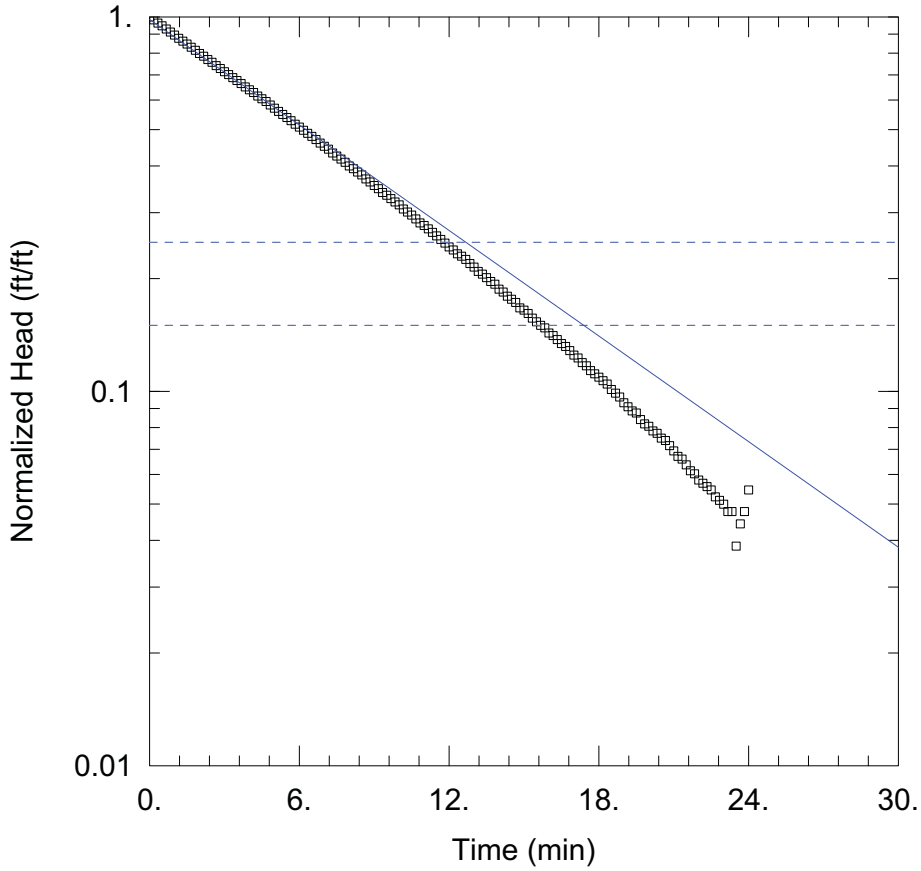

MW-60 TEST5

Data Set: J:\...\MW-60 T5.aqt
Date: 04/26/07 Time: 23:17:58

PROJECT INFORMATION

Company: GZA GeoEnvironmental
Client: Indian Point Energy Center
Project: 41.0017869.10
Location: Buchanan, New York
Test Well: MW-60 (135-144.7)
Test Date: 12/11/06

AQUIFER DATA

Saturated Thickness: 300. ft Anisotropy Ratio (Kz/Kr): 0.1

WELL DATA (MW-60 Test 5)

Initial Displacement: 12.67 ft Static Water Column Height: 131.9 ft
Total Well Penetration Depth: 131.9 ft Screen Length: 9.7 ft
Casing Radius: 0.08333 ft Wellbore Radius: 0.159 ft

SOLUTION

Aquifer Model: Unconfined Solution Method: Hvorslev

K = 0.2935 ft/day y0 = 12.49 ft

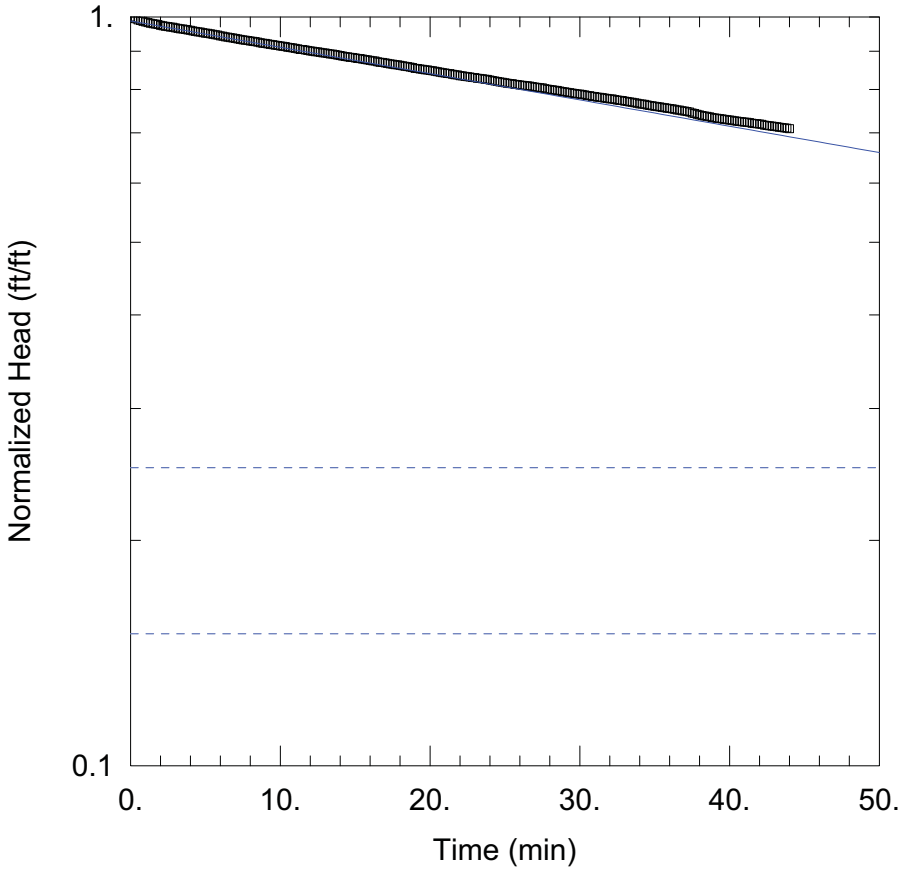

MW-60 TEST6

Data Set: J:\...\MW-60 T6.aqt
Date: 04/23/07 Time: 16:19:36

PROJECT INFORMATION

Company: GZA GeoEnvironmental
Client: Indian Point Energy Center
Project: 41.0017869.10
Location: Buchanan, New York
Test Well: MW-60 (115.3-125)
Test Date: 12/12/06

AQUIFER DATA

Saturated Thickness: 300. ft Anisotropy Ratio (Kz/Kr): 0.1

WELL DATA (MW-60 Test 6)

Initial Displacement: 22.45 ft Static Water Column Height: 111.8 ft
Total Well Penetration Depth: 111.8 ft Screen Length: 9.7 ft
Casing Radius: 0.08333 ft Wellbore Radius: 0.159 ft

SOLUTION

Aquifer Model: Unconfined Solution Method: Hvorslev

K = 0.02196 ft/day y0 = 22.17 ft

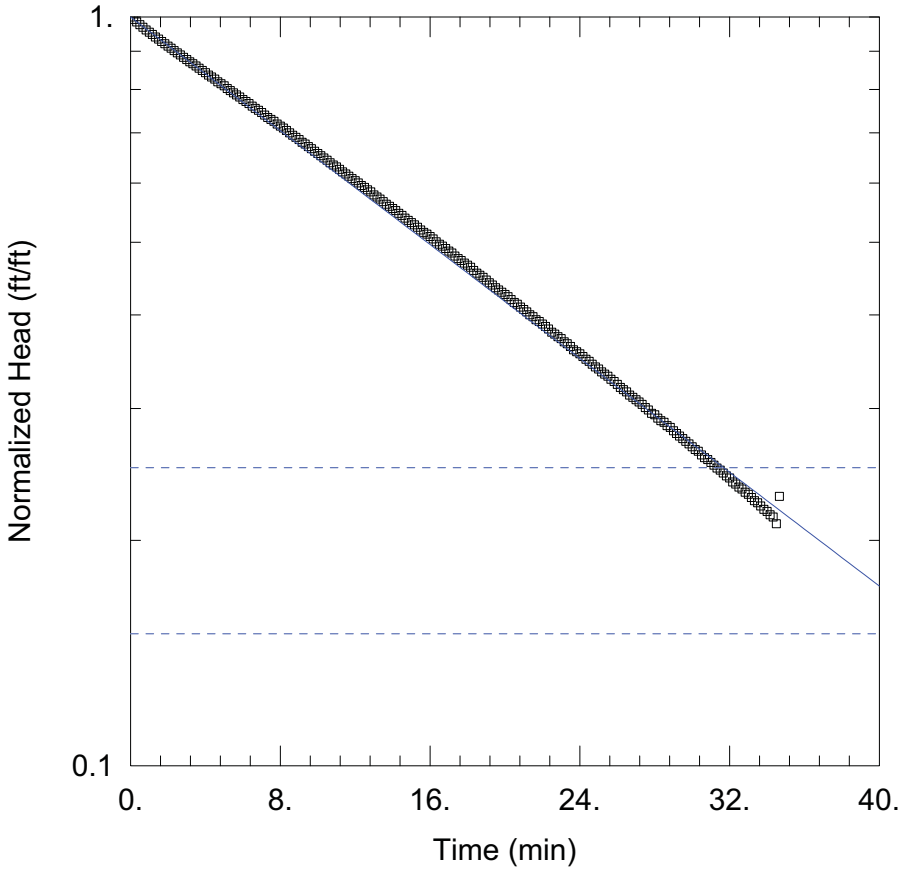

MW-60 TEST7

Data Set: J:\...\MW-60 T7.aqt
Date: 04/23/07 Time: 16:19:51

PROJECT INFORMATION

Company: GZA GeoEnvironmental
Client: Indian Point Energy Center
Project: 41.0017869.10
Location: Buchanan, New York
Test Well: MW-60 (99.3-109)
Test Date: 12/12/06

AQUIFER DATA

Saturated Thickness: 300. ft Anisotropy Ratio (Kz/Kr): 0.1

WELL DATA (MW-60 Test 7)

Initial Displacement: 19.41 ft Static Water Column Height: 95.35 ft
Total Well Penetration Depth: 170.1 ft Screen Length: 9.7 ft
Casing Radius: 0.08333 ft Wellbore Radius: 0.159 ft

SOLUTION

Aquifer Model: Unconfined Solution Method: Hvorslev

K = 0.1187 ft/day y0 = 19.41 ft

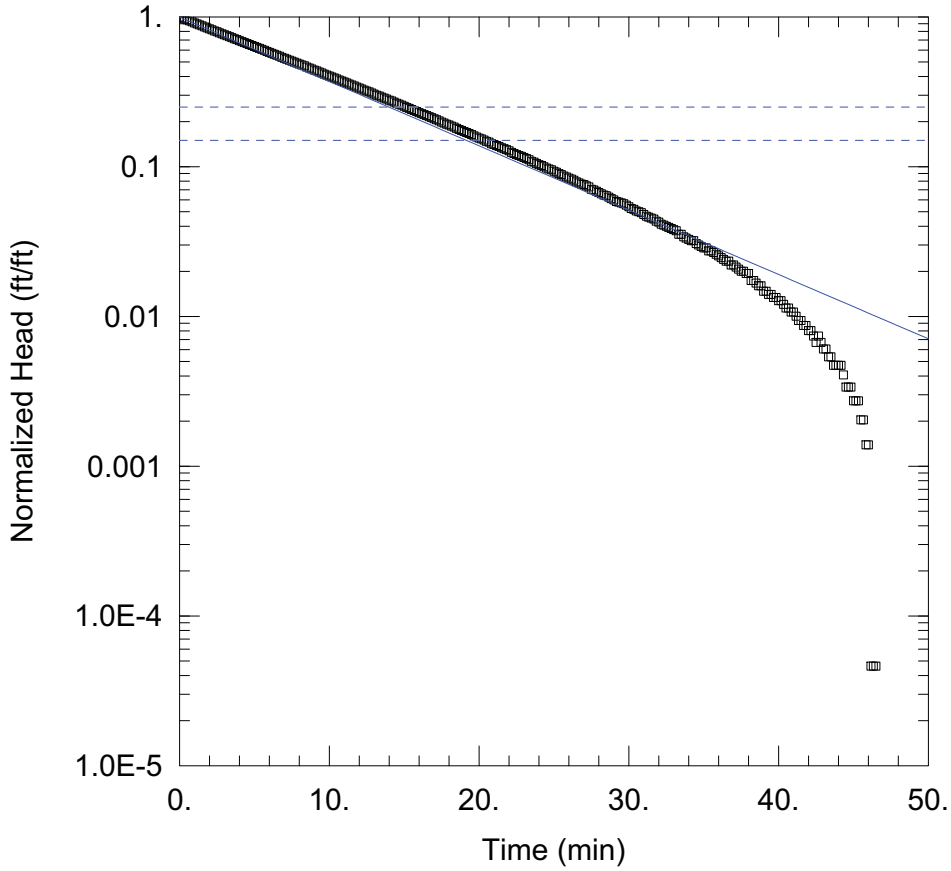

MW-60 TEST8

Data Set: J:\...\MW-60 T8.aqt
Date: 04/23/07 Time: 16:20:12

PROJECT INFORMATION

Company: GZA GeoEnvironmental
Client: Indian Point Energy Center
Project: 41.0017869.10
Location: Buchanan, New York
Test Well: MW-60 (88.3-98)
Test Date: 12/12/06

AQUIFER DATA

Saturated Thickness: 300. ft Anisotropy Ratio (Kz/Kr): 0.1

WELL DATA (MW-60 Test 8)

Initial Displacement: 21.61 ft Static Water Column Height: 84. ft
Total Well Penetration Depth: 84. ft Screen Length: 9.7 ft
Casing Radius: 0.08333 ft Wellbore Radius: 0.159 ft

SOLUTION

Aquifer Model: Unconfined Solution Method: Hvorslev

K = 0.2683 ft/day y0 = 21.53 ft

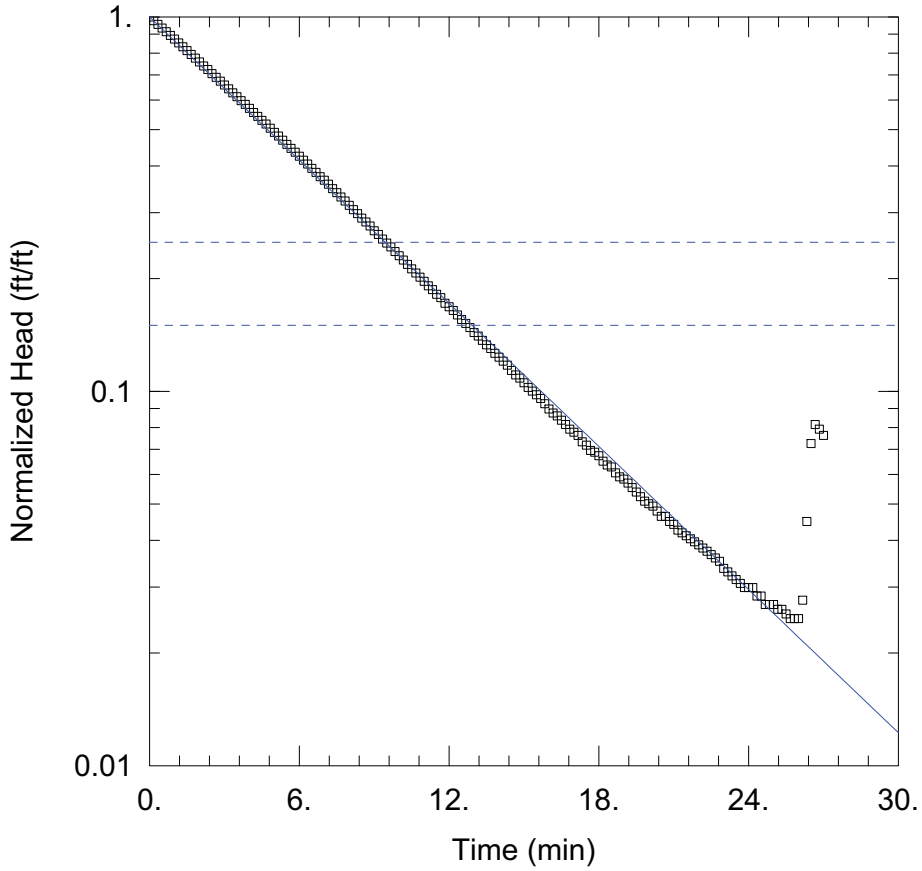

MW-60 TEST9

Data Set: J:\...\MW-60 T9.aqt
Date: 04/23/07 Time: 16:20:36

PROJECT INFORMATION

Company: GZA GeoEnvironmental
Client: Indian Point Energy Center
Project: 41.0017869.10
Location: Buchanan, New York
Test Well: MW-60 (69-78.7)
Test Date: 12/13/06

AQUIFER DATA

Saturated Thickness: 300. ft Anisotropy Ratio (Kz/Kr): 0.1

WELL DATA (MW-60 Test 9)

Initial Displacement: 19.22 ft Static Water Column Height: 66.45 ft
Total Well Penetration Depth: 66.45 ft Screen Length: 9.7 ft
Casing Radius: 0.08333 ft Wellbore Radius: 0.159 ft

SOLUTION

Aquifer Model: Unconfined Solution Method: Hvorslev

K = 0.398 ft/day y0 = 19.22 ft

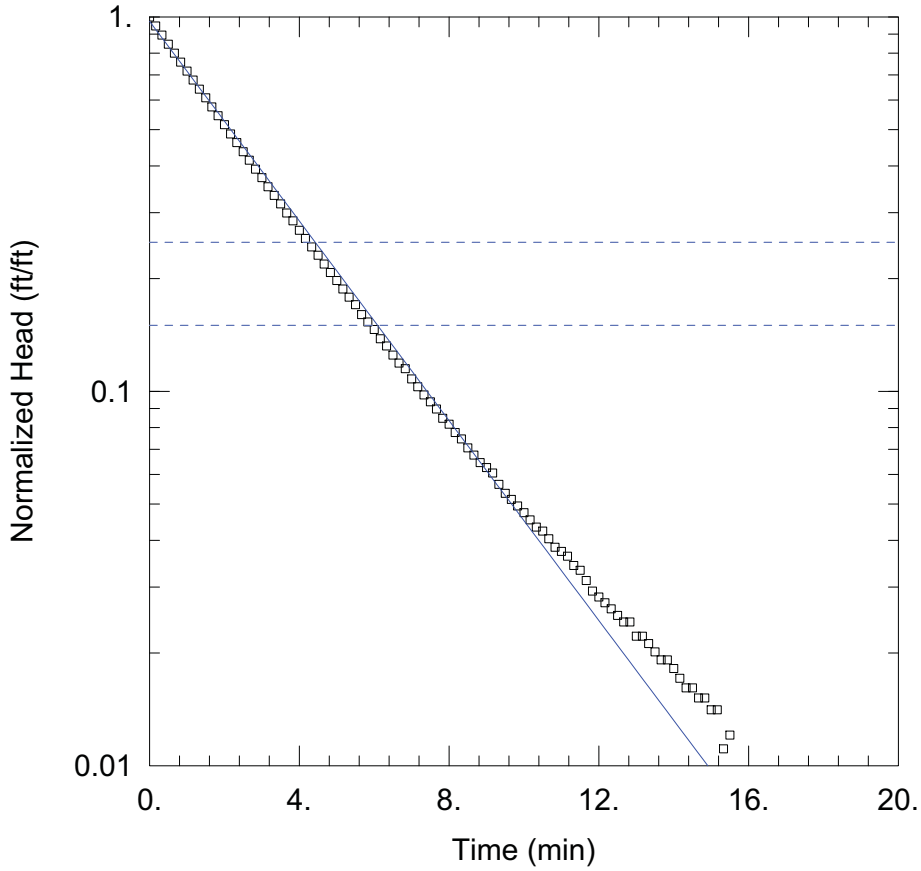

MW-60 TEST10

Data Set: J:\...\MW-60 T10.aqt
Date: 04/23/07 Time: 16:21:58

PROJECT INFORMATION

Company: GZA GeoEnvironmental
Client: Indian Point Energy Center
Project: 41.0017869.10
Location: Buchanan, New York
Test Well: MW-60 (50.3-60)
Test Date: 12/13/06

AQUIFER DATA

Saturated Thickness: 300. ft Anisotropy Ratio (Kz/Kr): 0.1

WELL DATA (MW-60 Test10)

Initial Displacement: 14.24 ft Static Water Column Height: 46.87 ft
Total Well Penetration Depth: 46.87 ft Screen Length: 9.7 ft
Casing Radius: 0.08333 ft Wellbore Radius: 0.159 ft

SOLUTION

Aquifer Model: Unconfined Solution Method: Hvorslev

K = 0.8329 ft/day y0 = 13.87 ft

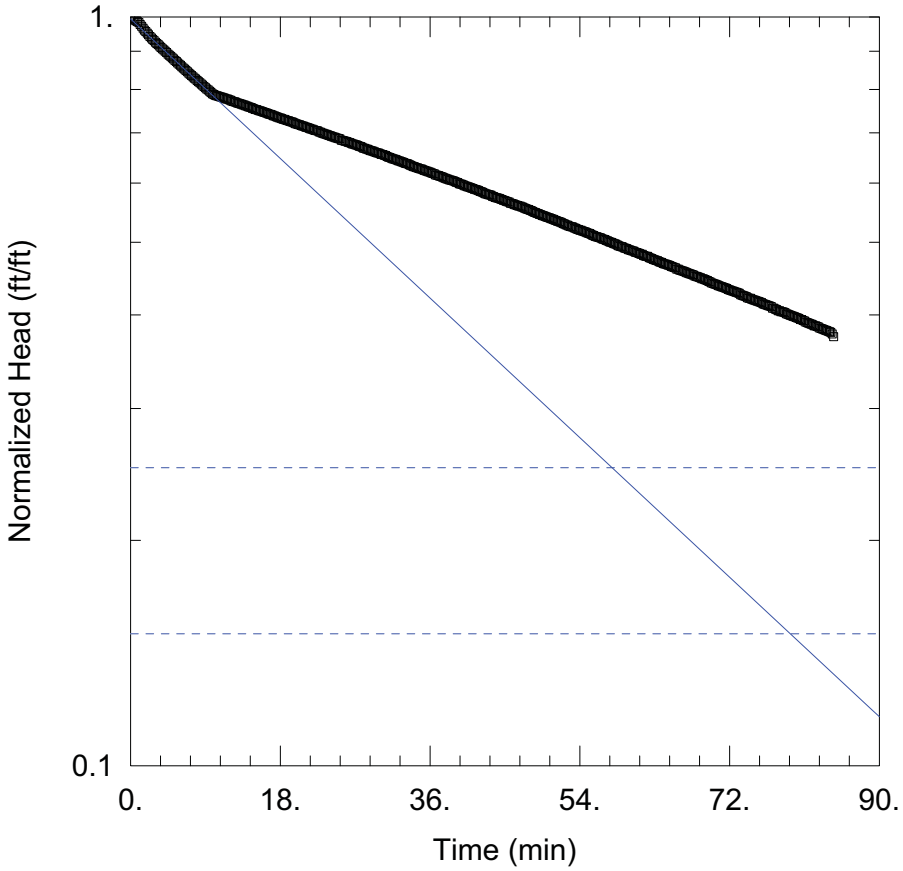

MW-60 TEST11

Data Set: J:\...\MW-60 T11.aqt
Date: 04/26/07 Time: 23:18:06

PROJECT INFORMATION

Company: GZA GeoEnvironmental
Client: Indian Point Energy Center
Project: 41.0017869.10
Location: Buchanan, New York
Test Well: MW-60 (34.3-44)
Test Date: 12/13/06

AQUIFER DATA

Saturated Thickness: 300. ft Anisotropy Ratio (Kz/Kr): 0.1

WELL DATA (MW-60 Test11)

Initial Displacement: 22.6 ft Static Water Column Height: 30.49 ft
Total Well Penetration Depth: 30.49 ft Screen Length: 9.7 ft
Casing Radius: 0.08333 ft Wellbore Radius: 0.159 ft

SOLUTION

Aquifer Model: Unconfined Solution Method: Hvorslev

K = 0.06467 ft/day y0 = 22.47 ft

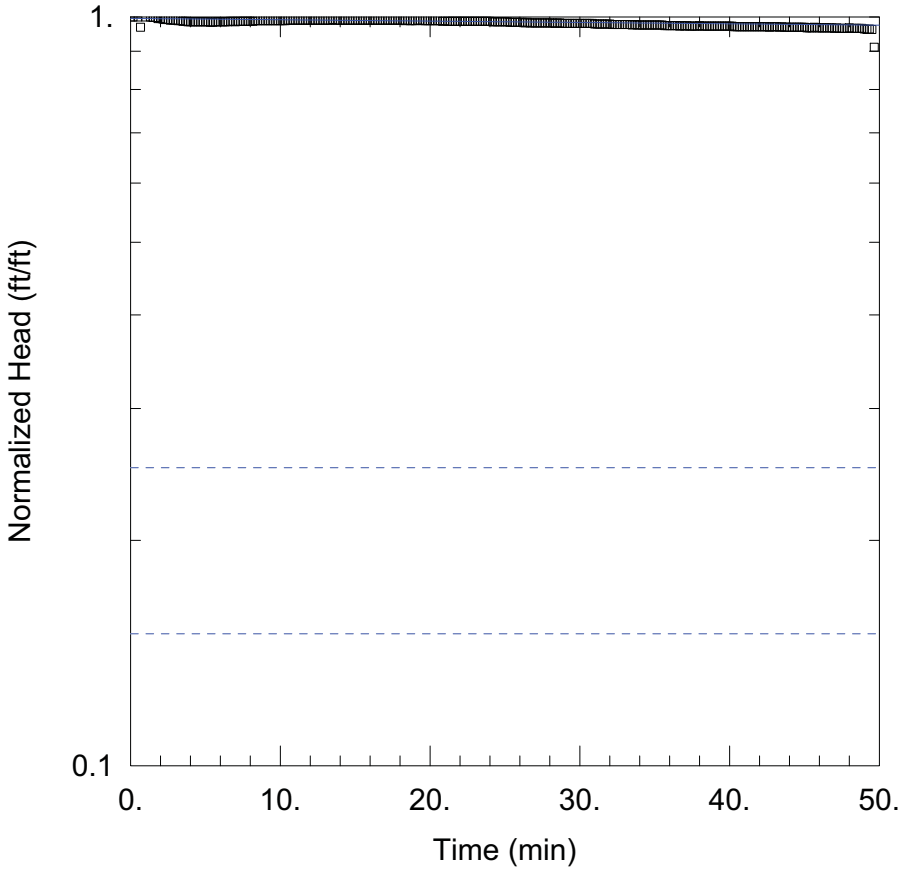

MW-60 TEST12

Data Set: J:\...\MW-60 T12.aqt
Date: 04/23/07 Time: 16:23:47

PROJECT INFORMATION

Company: GZA GeoEnvironmental
Client: Indian Point Energy Center
Project: 41.0017869.10
Location: Buchanan, New York
Test Well: MW-60 (10.2-29)
Test Date: 12/13/06

AQUIFER DATA

Saturated Thickness: 300. ft Anisotropy Ratio (Kz/Kr): 0.1

WELL DATA (MW-60 Test12)

Initial Displacement: 8.709 ft Static Water Column Height: 15.43 ft
Total Well Penetration Depth: 15.43 ft Screen Length: 18.8 ft
Casing Radius: 0.08333 ft Wellbore Radius: 0.159 ft

SOLUTION

Aquifer Model: Unconfined Solution Method: Hvorslev

K = 0.0006557 ft/day y0 = 8.669 ft

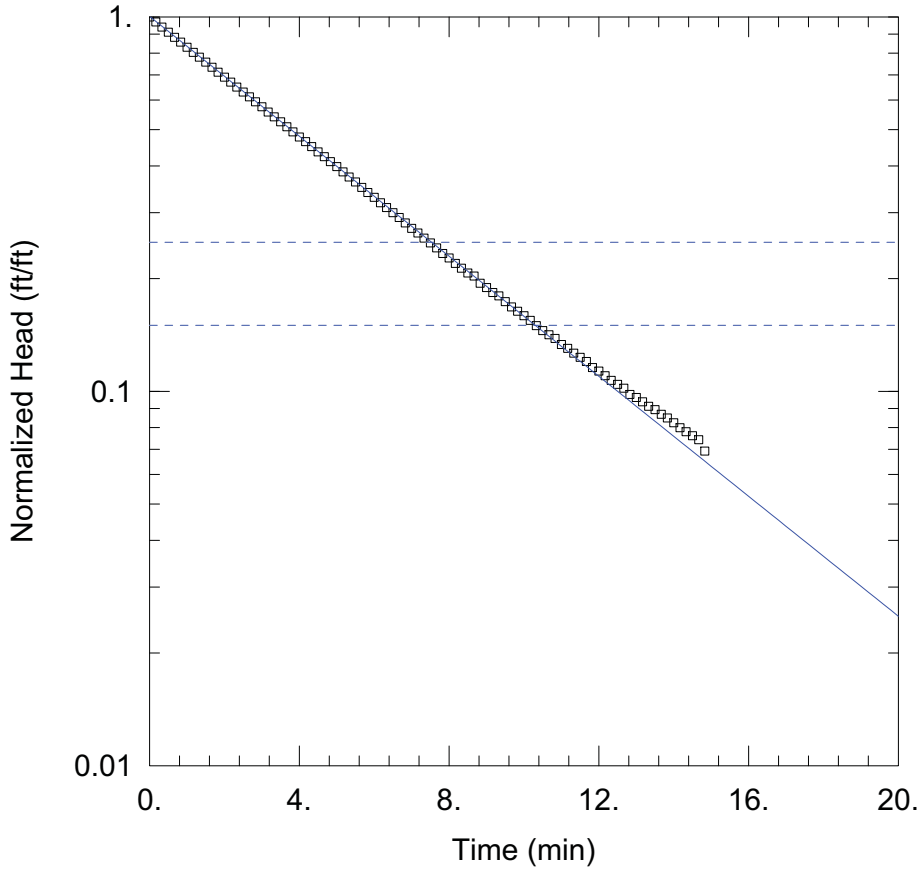

MW-62 TEST1

Data Set: J:\...\MW-62T1.aqt
Date: 04/23/07 Time: 16:29:34

PROJECT INFORMATION

Company: GZA GeoEnvironmental
Client: Indian Point Energy Center
Project: 41.0017869.10
Location: Buchanan, New York
Test Well: MW-62
Test Date: 12/19/06

AQUIFER DATA

Saturated Thickness: 300. ft Anisotropy Ratio (Kz/Kr): 0.1

WELL DATA (MW-62 Test 1)

Initial Displacement: 22.93 ft Static Water Column Height: 189. ft
Total Well Penetration Depth: 189. ft Screen Length: 13.9 ft
Casing Radius: 0.08333 ft Wellbore Radius: 0.159 ft

SOLUTION

Aquifer Model: Unconfined Solution Method: Hvorslev

K = 0.373 ft/day y0 = 23.02 ft

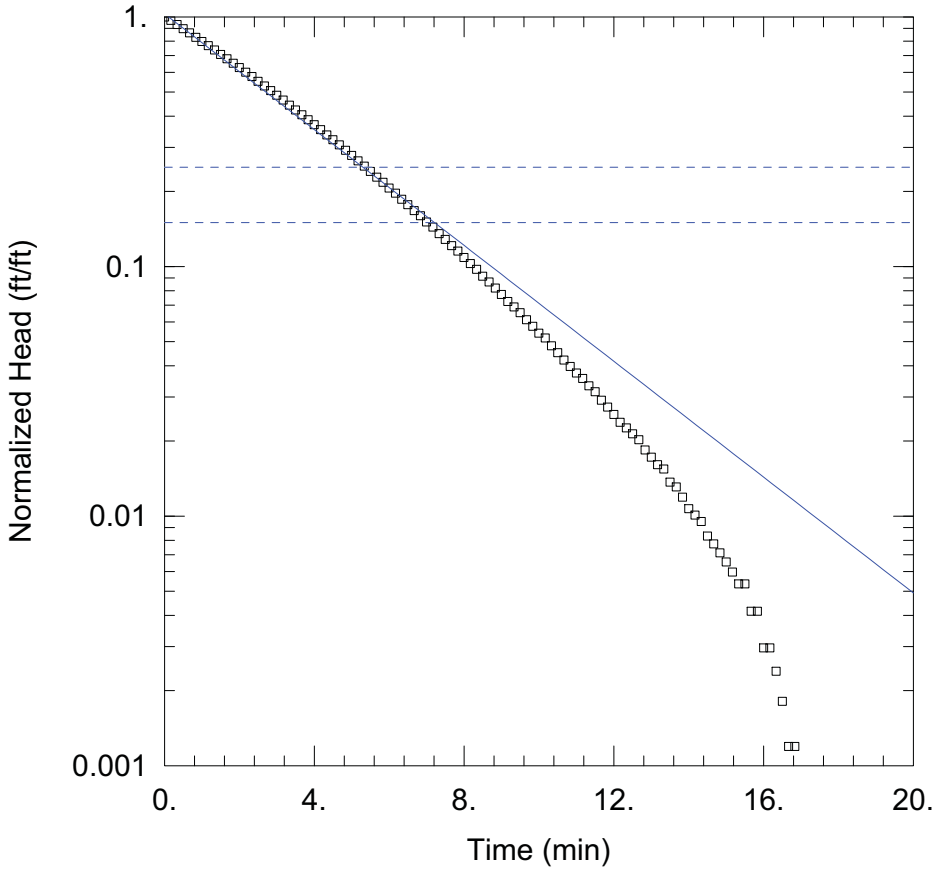

MW-62 TEST2

Data Set: J:\...\MW-62T2.aqt
Date: 04/23/07 Time: 16:30:16

PROJECT INFORMATION

Company: GZA GeoEnvironmental
Client: Indian Point Energy Center
Project: 41.0017869.10
Location: Buchanan, New York
Test Well: MW-62
Test Date: 12/20/06

AQUIFER DATA

Saturated Thickness: 300. ft Anisotropy Ratio (Kz/Kr): 0.1

WELL DATA (MW-62 Test 2)

Initial Displacement: 24.27 ft Static Water Column Height: 173.3 ft
Total Well Penetration Depth: 173.3 ft Screen Length: 9.7 ft
Casing Radius: 0.08333 ft Wellbore Radius: 0.159 ft

SOLUTION

Aquifer Model: Unconfined Solution Method: Hvorslev

K = 0.7246 ft/day y0 = 25. ft

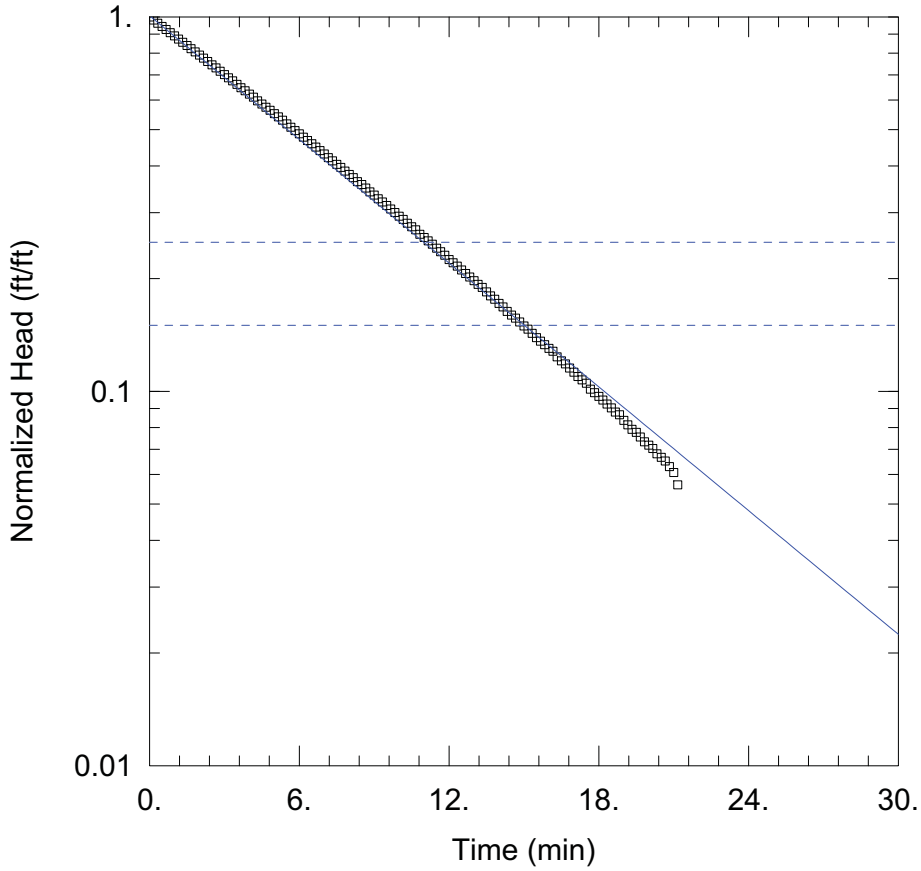

MW-62 TEST3

Data Set: J:\...\MW-62T3.aqt
Date: 04/23/07 Time: 16:30:47

PROJECT INFORMATION

Company: GZA GeoEnvironmental
Client: Indian Point Energy Center
Project: 41.0017869.10
Location: Buchanan, New York
Test Well: MW-62
Test Date: 12/20/06

AQUIFER DATA

Saturated Thickness: 300. ft Anisotropy Ratio (Kz/Kr): 0.1

WELL DATA (MW-62 Test 3)

Initial Displacement: 19.48 ft Static Water Column Height: 165.2 ft
Total Well Penetration Depth: 165.2 ft Screen Length: 9.7 ft
Casing Radius: 0.08333 ft Wellbore Radius: 0.159 ft

SOLUTION

Aquifer Model: Unconfined Solution Method: Hvorslev

K = 0.344 ft/day y0 = 19.64 ft

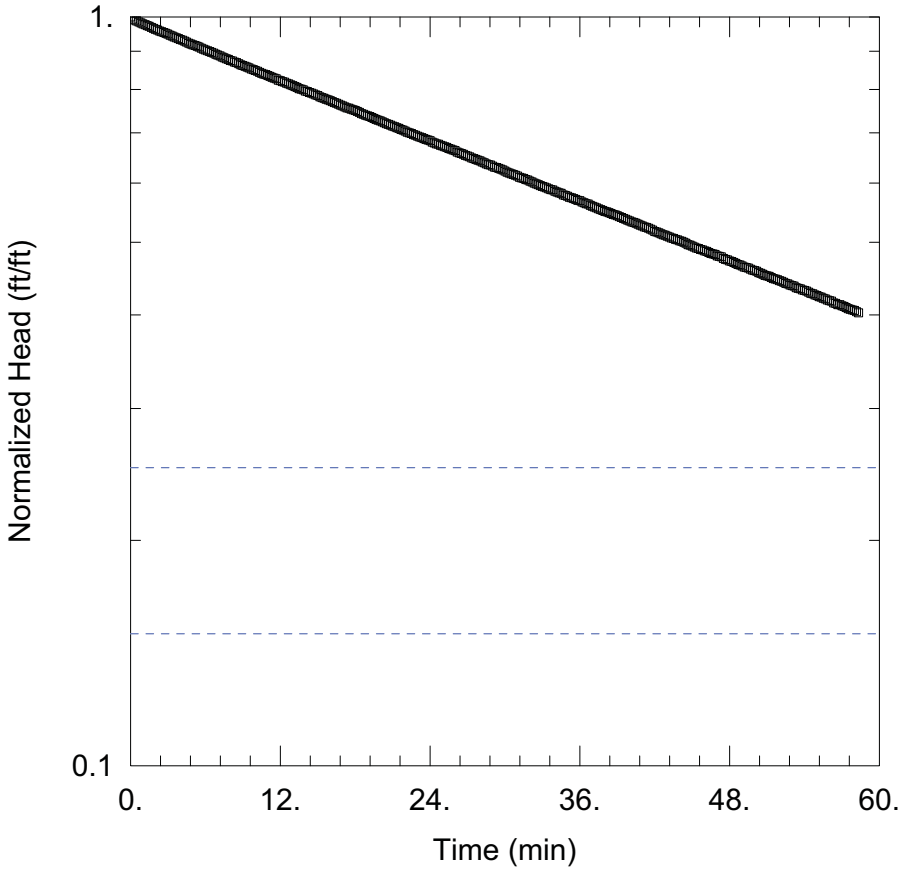

MW-62 TEST4

Data Set: J:\...\MW-62T4.aqt
Date: 04/23/07 Time: 16:31:05

PROJECT INFORMATION

Company: GZA GeoEnvironmental
Client: Indian Point Energy Center
Project: 41.0017869.10
Location: Buchanan, New York
Test Well: MW-62
Test Date: 12/20/06

AQUIFER DATA

Saturated Thickness: 300. ft Anisotropy Ratio (Kz/Kr): 0.1

WELL DATA (MW-62 Test4)

Initial Displacement: 19.65 ft Static Water Column Height: 154.7 ft
Total Well Penetration Depth: 154.7 ft Screen Length: 9.7 ft
Casing Radius: 0.08333 ft Wellbore Radius: 0.159 ft

SOLUTION

Aquifer Model: Unconfined Solution Method: Hvorslev

K = 0.04219 ft/day y0 = 19.52 ft

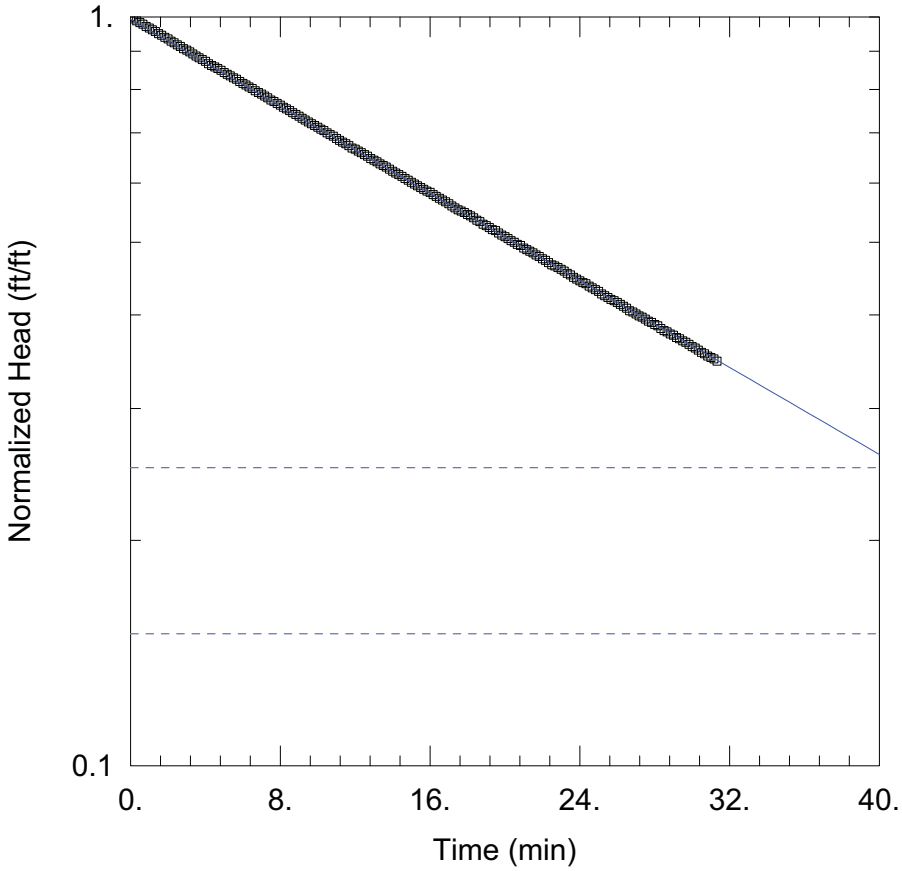

MW-62 TEST5

Data Set: J:\...\MW-62T5.aqt
Date: 04/23/07 Time: 16:31:27

PROJECT INFORMATION

Company: GZA GeoEnvironmental
Client: Indian Point Energy Center
Project: 41.0017869.10
Location: Buchanan, New York
Test Well: MW-62
Test Date: 12/20/06

AQUIFER DATA

Saturated Thickness: 300. ft Anisotropy Ratio (Kz/Kr): 0.1

WELL DATA (MW-62 Test5)

Initial Displacement: 18.06 ft Static Water Column Height: 144.1 ft
Total Well Penetration Depth: 144.1 ft Screen Length: 9.7 ft
Casing Radius: 0.08333 ft Wellbore Radius: 0.159 ft

SOLUTION

Aquifer Model: Unconfined Solution Method: Hvorslev

K = 0.09074 ft/day y0 = 17.93 ft

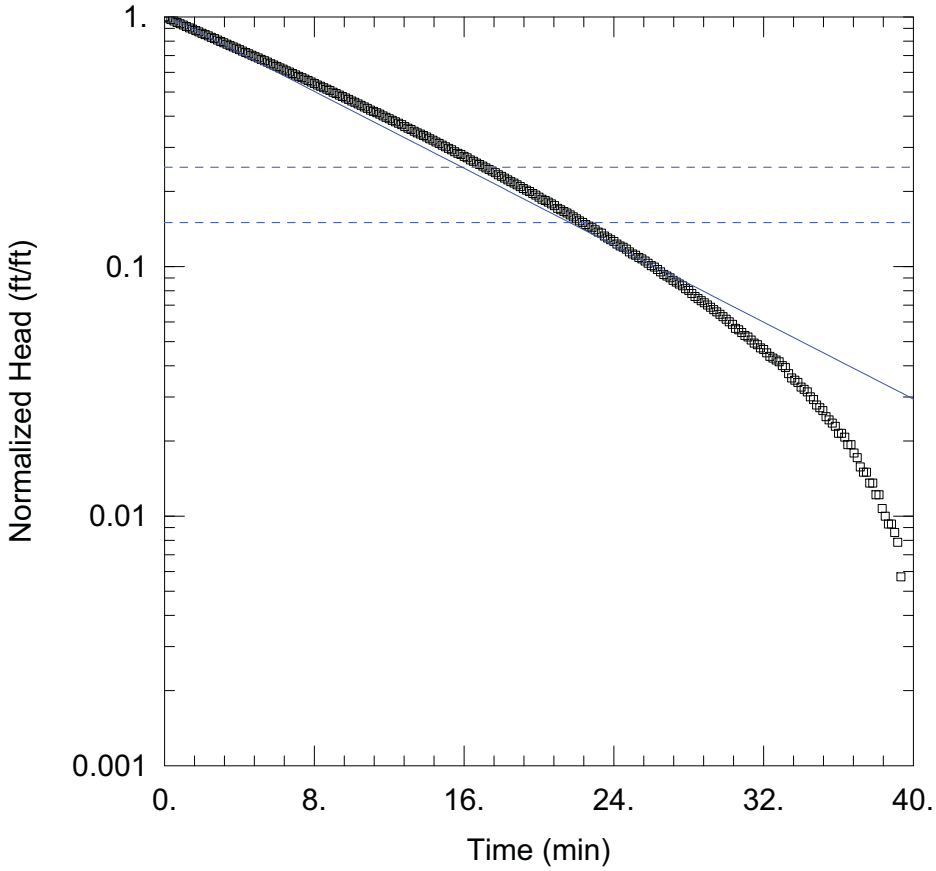

MW-62 TEST6

Data Set: J:\...\MW-62T6.aqt
Date: 04/23/07 Time: 16:31:44

PROJECT INFORMATION

Company: GZA GeoEnvironmental
Client: Indian Point Energy Center
Project: 41.0017869.10
Location: Buchanan, New York
Test Well: MW-62
Test Date: 12/21/06

AQUIFER DATA

Saturated Thickness: 300. ft Anisotropy Ratio (Kz/Kr): 0.1

WELL DATA (MW-62 Test6)

Initial Displacement: 20.13 ft Static Water Column Height: 130.8 ft
Total Well Penetration Depth: 130.8 ft Screen Length: 9.7 ft
Casing Radius: 0.08333 ft Wellbore Radius: 0.159 ft

SOLUTION

Aquifer Model: Unconfined Solution Method: Hvorslev

K = 0.2406 ft/day y0 = 20.6 ft

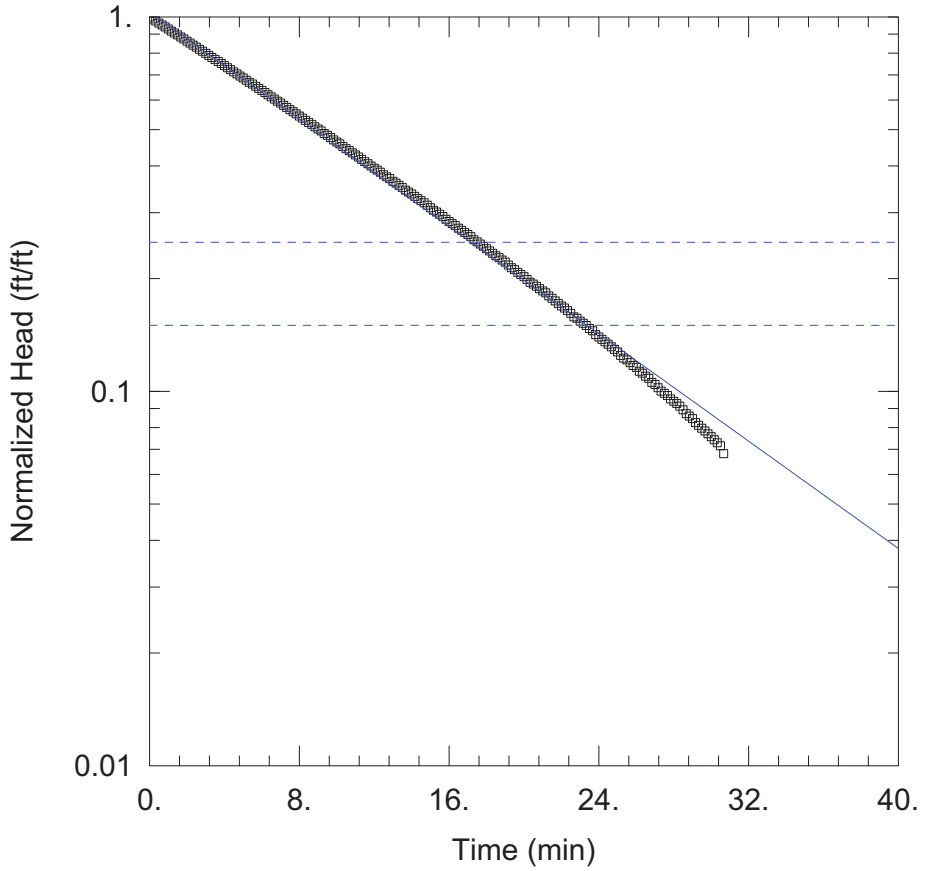

MW-62 TEST7

Data Set: J:\...\MW-62T7.aqt
Date: 01/03/08 Time: 12:37:18

PROJECT INFORMATION

Company: GZA GeoEnvironmental
Client: Indian Point Energy Center
Project: 41.0017869.10
Location: Buchanan, New York
Test Well: MW-62
Test Date: 12/21/06

AQUIFER DATA

Saturated Thickness: 300. ft Anisotropy Ratio (Kz/Kr): 0.1

WELL DATA (MW-62 Test7)

Initial Displacement: 21.12 ft Static Water Column Height: 112.7 ft
Total Well Penetration Depth: 112.7 ft Screen Length: 9.7 ft
Casing Radius: 0.08333 ft Wellbore Radius: 0.159 ft

SOLUTION

Aquifer Model: Unconfined Solution Method: Hvorslev

K = 0.2238 ft/day y0 = 21.8 ft

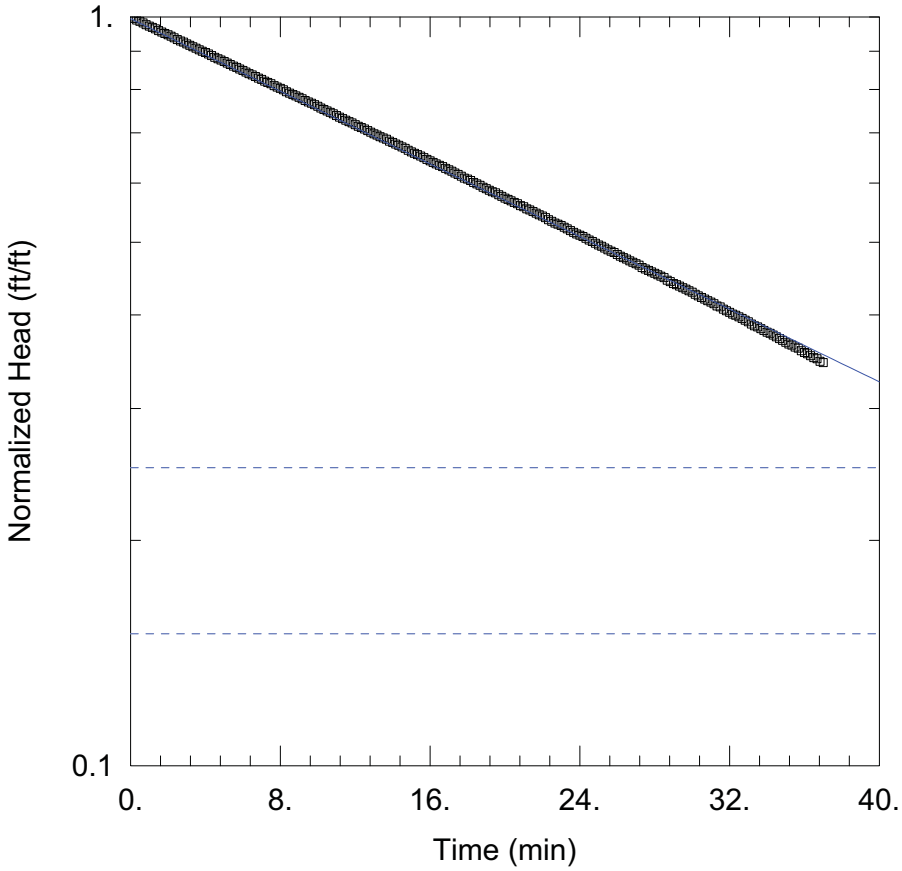

MW-62 TEST8

Data Set: J:\...\MW-62T8.aqt
Date: 04/23/07 Time: 16:32:25

PROJECT INFORMATION

Company: GZA GeoEnvironmental
Client: Indian Point Energy Center
Project: 41.0017869.10
Location: Buchanan, New York
Test Well: MW-62
Test Date: 12/21/06

AQUIFER DATA

Saturated Thickness: 300. ft Anisotropy Ratio (Kz/Kr): 0.1

WELL DATA (MW-62 Test8)

Initial Displacement: 21.2 ft Static Water Column Height: 103. ft
Total Well Penetration Depth: 103. ft Screen Length: 9.7 ft
Casing Radius: 0.08333 ft Wellbore Radius: 0.159 ft

SOLUTION

Aquifer Model: Unconfined Solution Method: Hvorslev

K = 0.07574 ft/day y0 = 21.09 ft

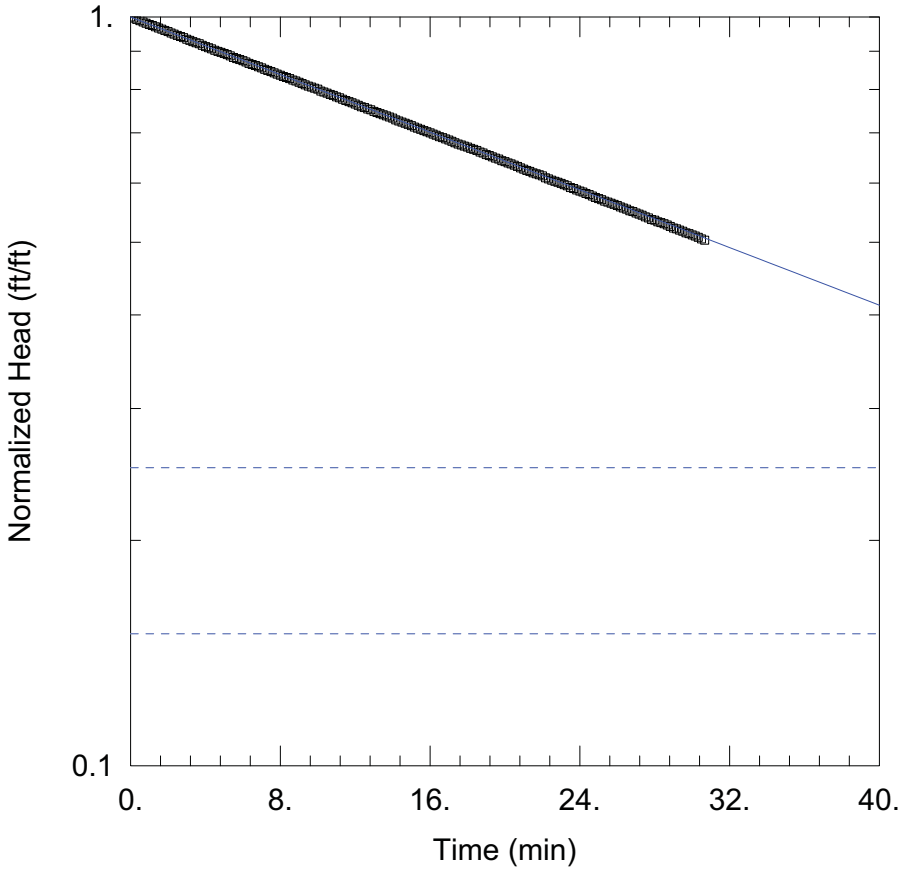

MW-62 TEST9

Data Set: J:\...\MW-62T9.aqt
Date: 04/23/07 Time: 16:32:41

PROJECT INFORMATION

Company: GZA GeoEnvironmental
Client: Indian Point Energy Center
Project: 41.0017869.10
Location: Buchanan, New York
Test Well: MW-62
Test Date: 12/21/06

AQUIFER DATA

Saturated Thickness: 300. ft Anisotropy Ratio (Kz/Kr): 0.1

WELL DATA (MW-62 Test9)

Initial Displacement: 22.57 ft Static Water Column Height: 93.56 ft
Total Well Penetration Depth: 93.56 ft Screen Length: 9.7 ft
Casing Radius: 0.08333 ft Wellbore Radius: 0.159 ft

SOLUTION

Aquifer Model: Unconfined Solution Method: Hvorslev

K = 0.06006 ft/day y0 = 22.57 ft

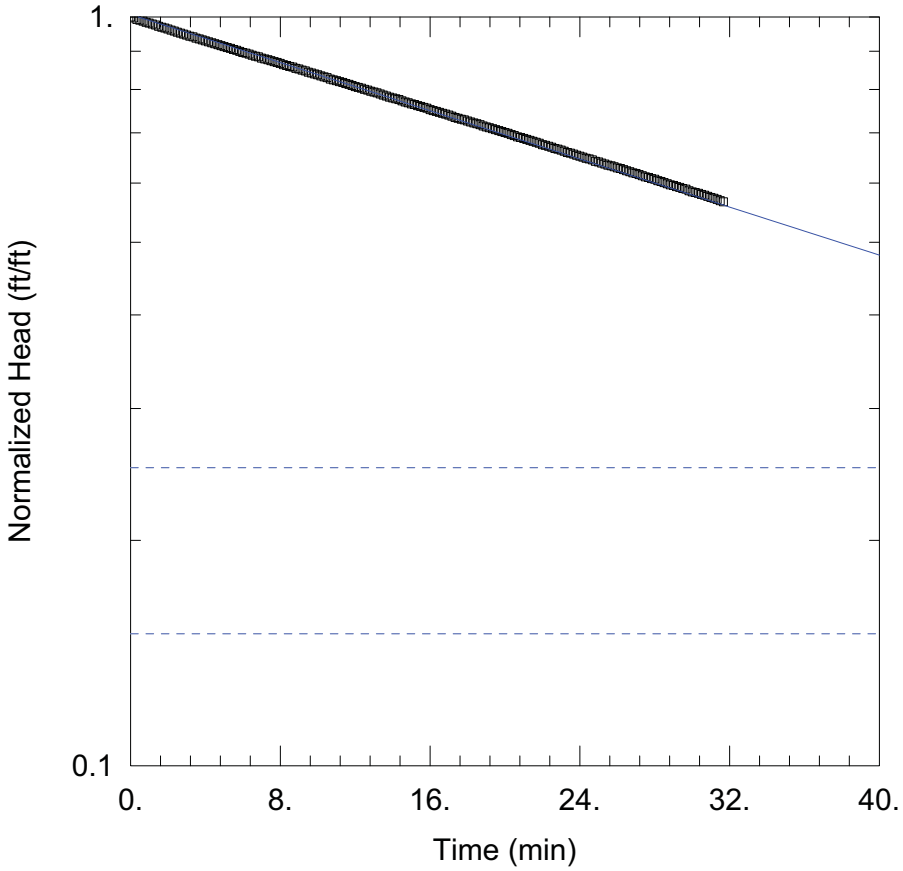

MW-62 TEST10

Data Set: J:\...\MW-62T10.aqt
Date: 04/23/07 Time: 16:32:57

PROJECT INFORMATION

Company: GZA GeoEnvironmental
Client: Indian Point Energy Center
Project: 41.0017869.10
Location: Buchanan, New York
Test Well: MW-62
Test Date: 12/21/06

AQUIFER DATA

Saturated Thickness: 300. ft Anisotropy Ratio (Kz/Kr): 0.1

WELL DATA (MW-62 Test10)

Initial Displacement: 21.24 ft Static Water Column Height: 76.9 ft
Total Well Penetration Depth: 76.9 ft Screen Length: 9.7 ft
Casing Radius: 0.08333 ft Wellbore Radius: 0.159 ft

SOLUTION

Aquifer Model: Unconfined Solution Method: Hvorslev

K = 0.05019 ft/day y0 = 21.4 ft

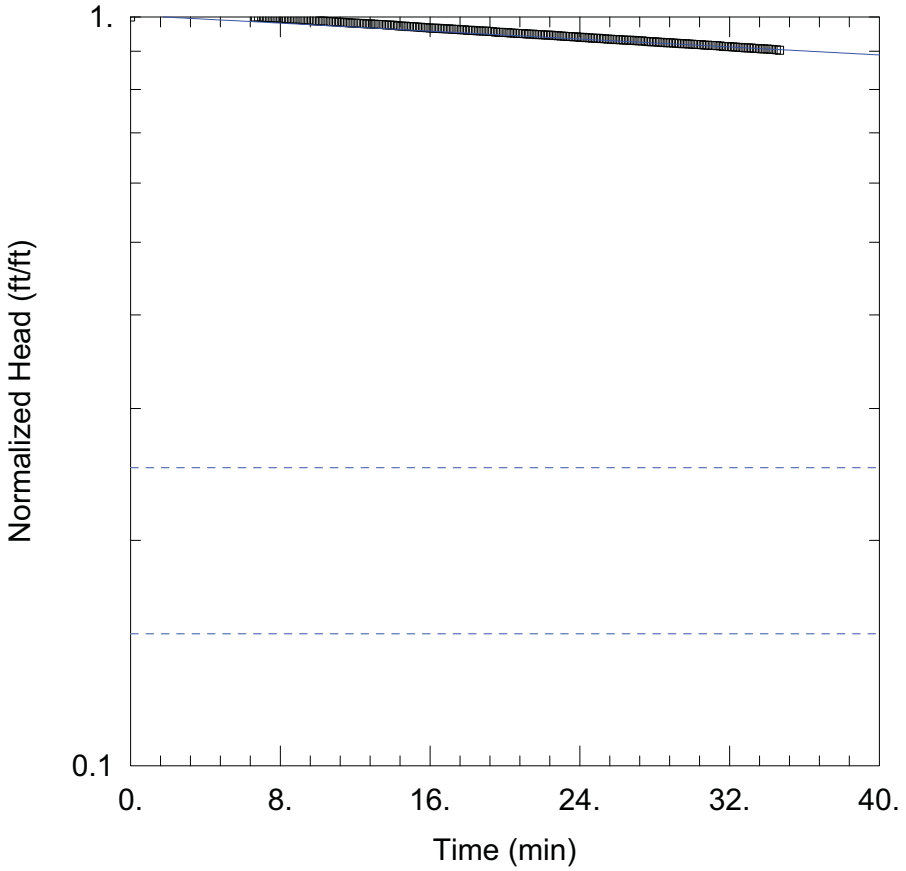

MW-62 TEST11

Data Set: J:\...\MW-62T11.aqt
Date: 04/23/07 Time: 16:33:17

PROJECT INFORMATION

Company: GZA GeoEnvironmental
Client: Indian Point Energy Center
Project: 41.0017869.10
Location: Buchanan, New York
Test Well: MW-62
Test Date: 12/22/06

AQUIFER DATA

Saturated Thickness: 300. ft Anisotropy Ratio (Kz/Kr): 0.1

WELL DATA (MW-62 Test11)

Initial Displacement: 21.3 ft Static Water Column Height: 57.98 ft
Total Well Penetration Depth: 57.98 ft Screen Length: 9.7 ft
Casing Radius: 0.08333 ft Wellbore Radius: 0.159 ft

SOLUTION

Aquifer Model: Unconfined Solution Method: Hvorslev

K = 0.008284 ft/day y0 = 21.41 ft

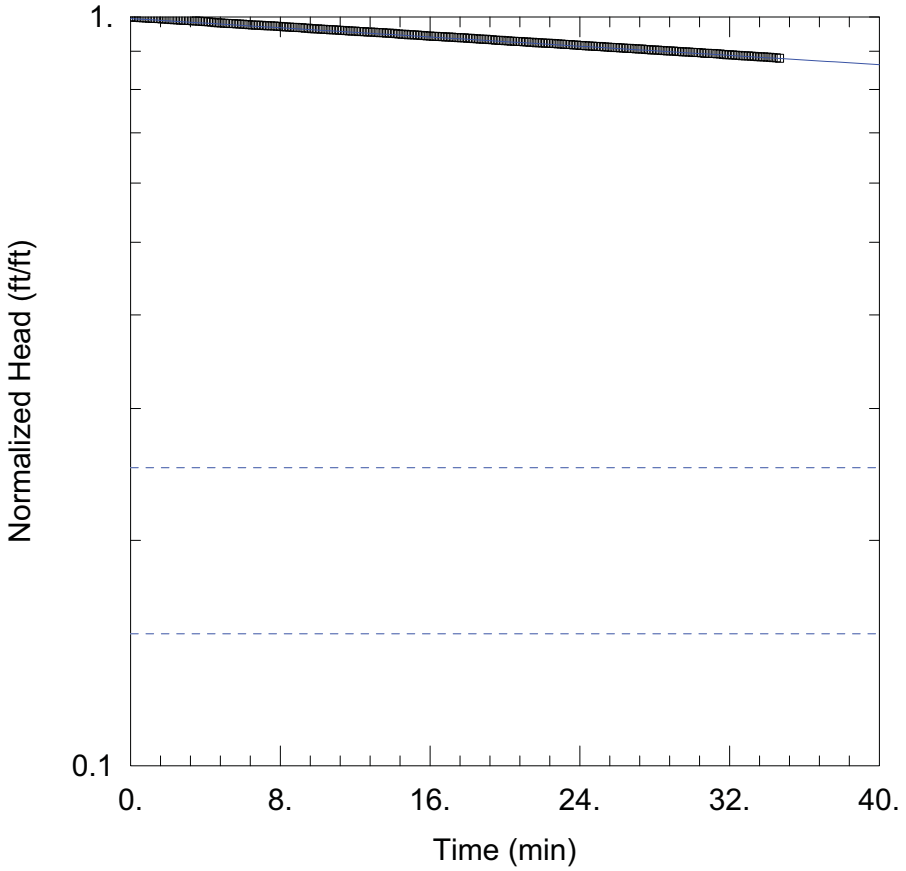

MW-62 TEST12

Data Set: J:\...\MW-62T12.aqt
Date: 04/23/07 Time: 16:33:44

PROJECT INFORMATION

Company: GZA GeoEnvironmental
Client: Indian Point Energy Center
Project: 41.0017869.10
Location: Buchanan, New York
Test Well: MW-62
Test Date: 12/22/06

AQUIFER DATA

Saturated Thickness: 300. ft Anisotropy Ratio (Kz/Kr): 0.1

WELL DATA (MW-62 Test12)

Initial Displacement: 21.84 ft Static Water Column Height: 45.92 ft
Total Well Penetration Depth: 190.7 ft Screen Length: 13.8 ft
Casing Radius: 0.08333 ft Wellbore Radius: 0.159 ft

SOLUTION

Aquifer Model: Unconfined Solution Method: Hvorslev

K = 0.007207 ft/day y0 = 21.73 ft

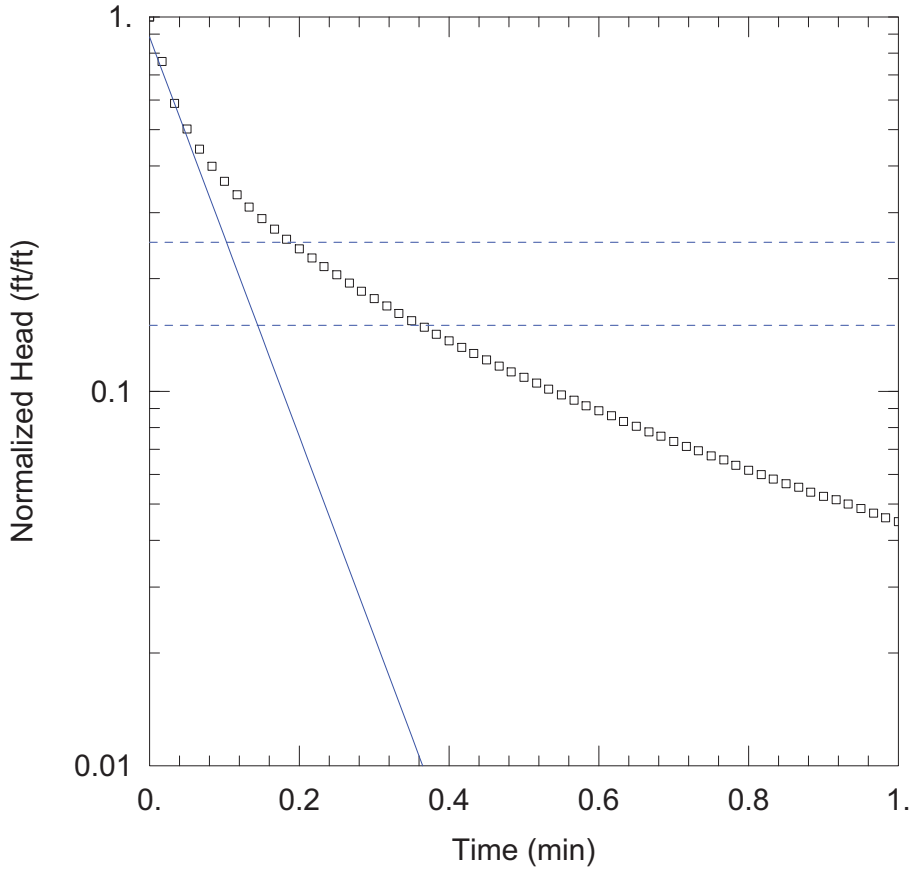

MW-62-38 PNEUMATIC SLUG (TEST 2)

Data Set: J:\...\MW-62-38 May07 T2.aqt
Date: 07/01/07 Time: 18:10:58

PROJECT INFORMATION

Company: GZA GeoEnvironmental
Client: Indian Point Energy Center
Project: 41.0017869.10
Location: Buchanan, New York
Test Well: MW-62-38
Test Date: 5/16/07

AQUIFER DATA

Saturated Thickness: 300. ft Anisotropy Ratio (Kz/Kr): 0.1

WELL DATA (MW-62-38)

Initial Displacement: 7.38 ft Static Water Column Height: 24.79 ft
Total Well Penetration Depth: 24.79 ft Screen Length: 6.3 ft
Casing Radius: 0.04167 ft Wellbore Radius: 0.159 ft

SOLUTION

Aquifer Model: Unconfined Solution Method: Hvorslev

K = 11.77 ft/day y0 = 6.523 ft

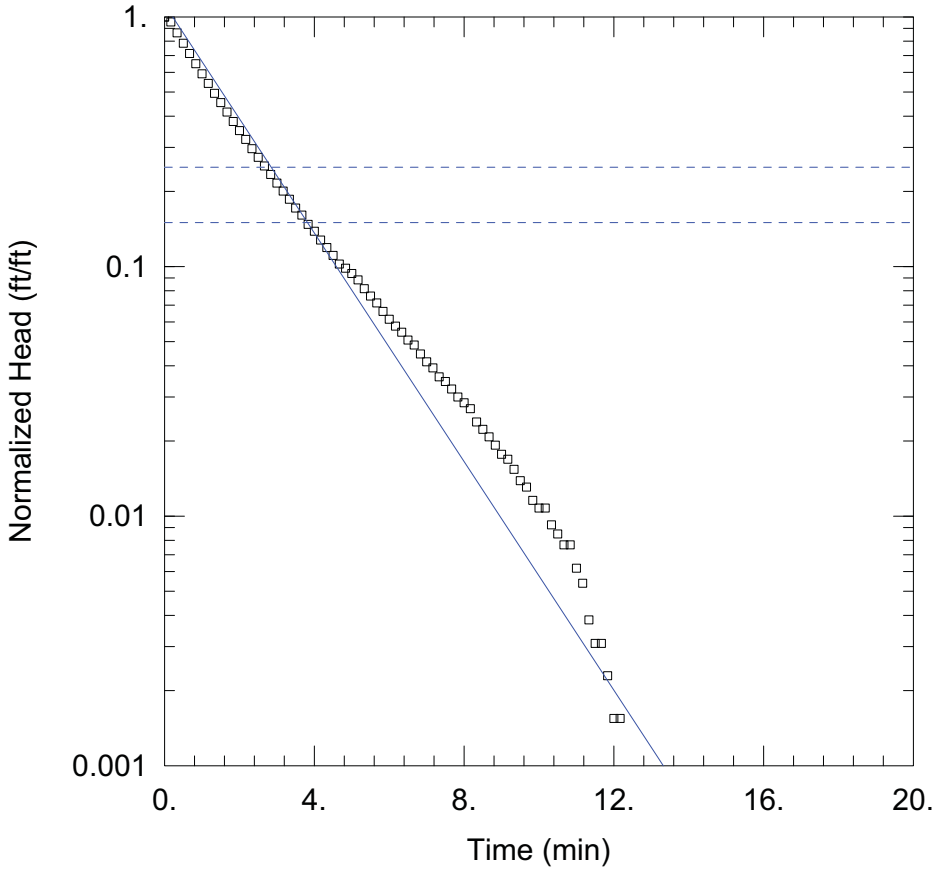

MW-63 TEST13

Data Set: J:\...\MW-63 T13.aqt
Date: 04/26/07 Time: 23:20:53

PROJECT INFORMATION

Company: GZA GeoEnvironmental
Client: Indian Point Energy Center
Project: 41.0017869.10
Location: Buchanan, New York
Test Well: MW-63 (186.0-201.0)
Test Date: 11/9/06

AQUIFER DATA

Saturated Thickness: 300. ft Anisotropy Ratio (Kz/Kr): 0.1

WELL DATA (MW-63 Test13)

Initial Displacement: 18.76 ft Static Water Column Height: 188.5 ft
Total Well Penetration Depth: 188.5 ft Screen Length: 9.7 ft
Casing Radius: 0.08333 ft Wellbore Radius: 0.159 ft

SOLUTION

Aquifer Model: Unconfined Solution Method: Hvorslev

K = 1.43 ft/day y0 = 21.07 ft

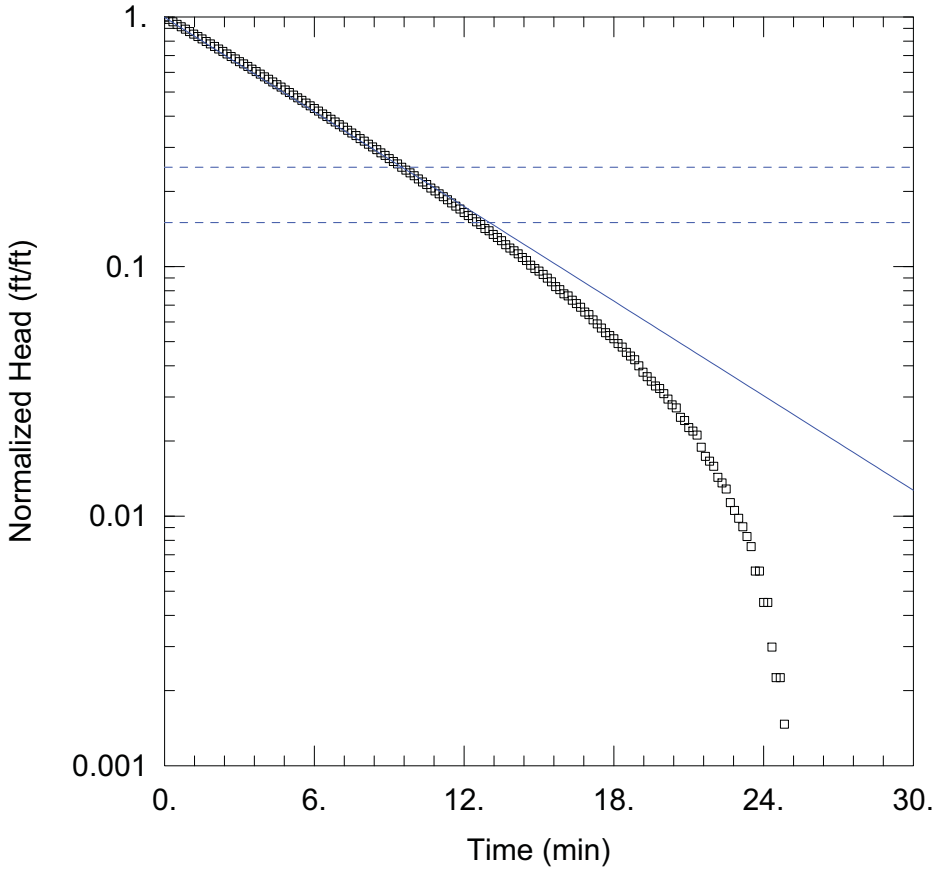

MW-63 TEST12

Data Set: J:\...\MW-63 T12.aqt
Date: 04/23/07 Time: 16:44:37

PROJECT INFORMATION

Company: GZA GeoEnvironmental
Client: Indian Point Energy Center
Project: 41.0017869.10
Location: Buchanan, New York
Test Well: MW-63 (165.0-174.7)
Test Date: 11/10/06

AQUIFER DATA

Saturated Thickness: 300. ft Anisotropy Ratio (Kz/Kr): 0.1

WELL DATA (MW-63 Test12)

Initial Displacement: 19.08 ft Static Water Column Height: 162.2 ft
Total Well Penetration Depth: 162.2 ft Screen Length: 9.7 ft
Casing Radius: 0.08333 ft Wellbore Radius: 0.159 ft

SOLUTION

Aquifer Model: Unconfined Solution Method: Hvorslev

K = 0.3945 ft/day y0 = 19.02 ft

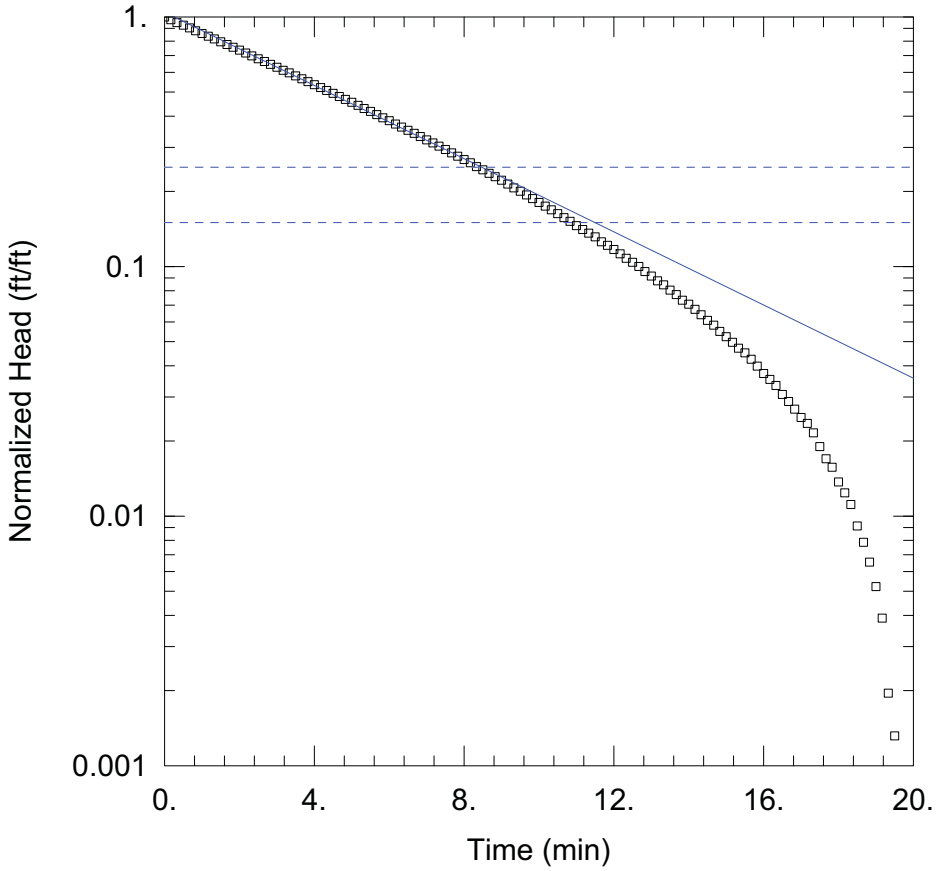

MW-63 TEST11

Data Set: J:\...\MW-63 T11.aqt
Date: 04/26/07 Time: 23:20:45

PROJECT INFORMATION

Company: GZA GeoEnvironmental
Client: Indian Point Energy Center
Project: 41.0017869.10
Location: Buchanan, New York
Test Well: MW-63 (155.0-164.7)
Test Date: 11/10/06

AQUIFER DATA

Saturated Thickness: 300. ft Anisotropy Ratio (Kz/Kr): 0.1

WELL DATA (MW-63 Test11)

Initial Displacement: 22.03 ft Static Water Column Height: 152.2 ft
Total Well Penetration Depth: 152.2 ft Screen Length: 9.7 ft
Casing Radius: 0.08333 ft Wellbore Radius: 0.159 ft

SOLUTION

Aquifer Model: Unconfined Solution Method: Hvorslev

K = 0.4578 ft/day y0 = 22.99 ft

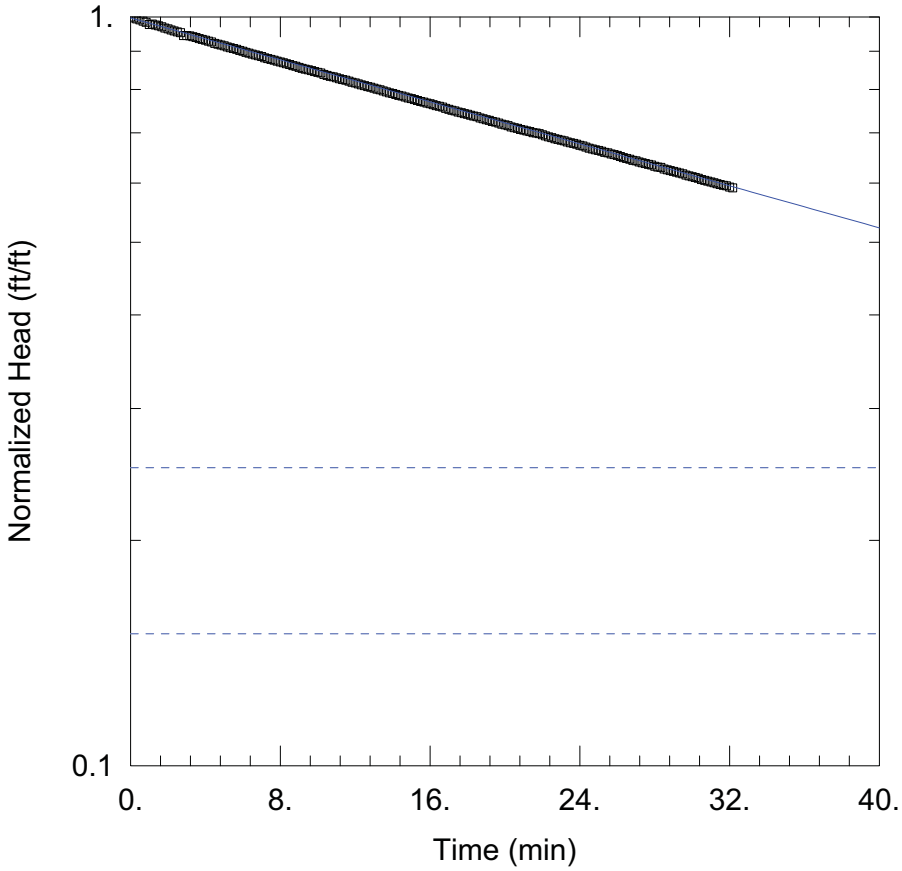

MW-63 TEST10

Data Set: J:\...\MW-63 T10.aqt
Date: 04/23/07 Time: 16:43:54

PROJECT INFORMATION

Company: GZA GeoEnvironmental
Client: Indian Point Energy Center
Project: 41.0017869.10
Location: Buchanan, New York
Test Well: MW-63 (145.0-154.7)
Test Date: 11/10/06

AQUIFER DATA

Saturated Thickness: 300. ft Anisotropy Ratio (Kz/Kr): 0.1

WELL DATA (MW-63 Test10)

Initial Displacement: 18.81 ft Static Water Column Height: 141.1 ft
Total Well Penetration Depth: 141.1 ft Screen Length: 9.7 ft
Casing Radius: 0.08333 ft Wellbore Radius: 0.159 ft

SOLUTION

Aquifer Model: Unconfined Solution Method: Hvorslev

K = 0.04377 ft/day y0 = 18.75 ft

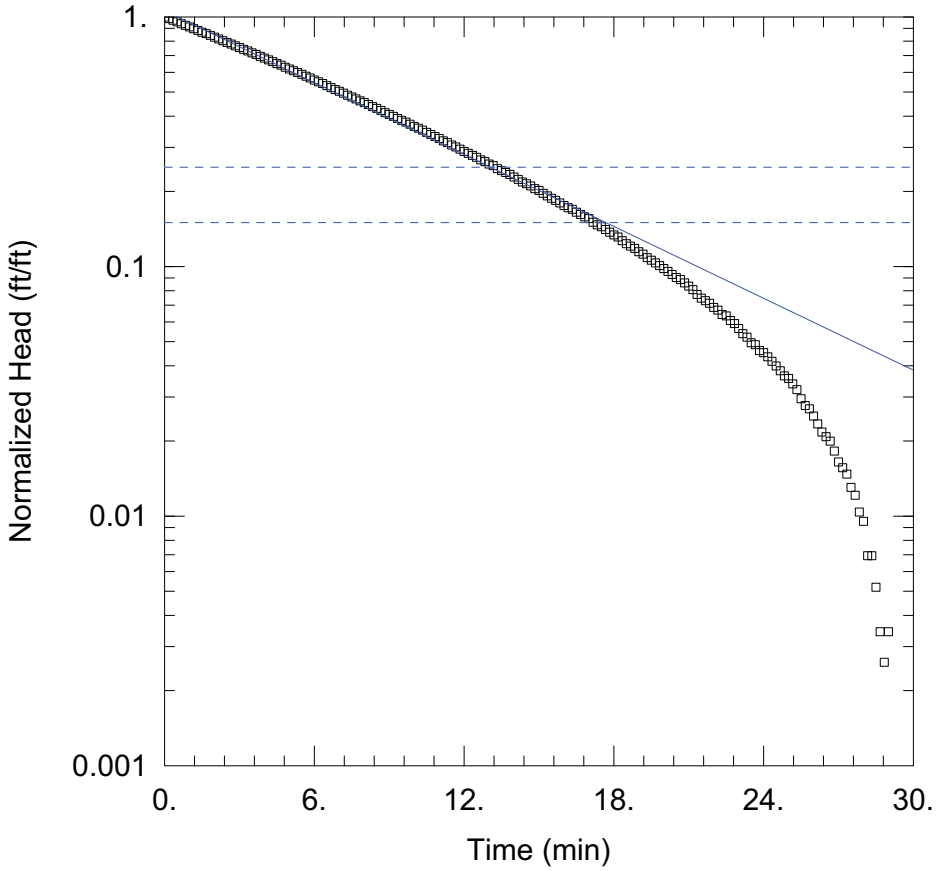

MW-63 TEST9

Data Set: J:\...\MW-63 T9.aqt
Date: 04/26/07 Time: 23:20:30

PROJECT INFORMATION

Company: GZA GeoEnvironmental
Client: Indian Point Energy Center
Project: 41.0017869.10
Location: Buchanan, New York
Test Well: MW-63 (123.5-133.2)
Test Date: 11/10/06

AQUIFER DATA

Saturated Thickness: 300. ft Anisotropy Ratio (Kz/Kr): 0.1

WELL DATA (MW-63 Test 9)

Initial Displacement: 16.57 ft Static Water Column Height: 120.7 ft
Total Well Penetration Depth: 120.7 ft Screen Length: 9.7 ft
Casing Radius: 0.08333 ft Wellbore Radius: 0.159 ft

SOLUTION

Aquifer Model: Unconfined Solution Method: Hvorslev

K = 0.2997 ft/day y0 = 17.53 ft

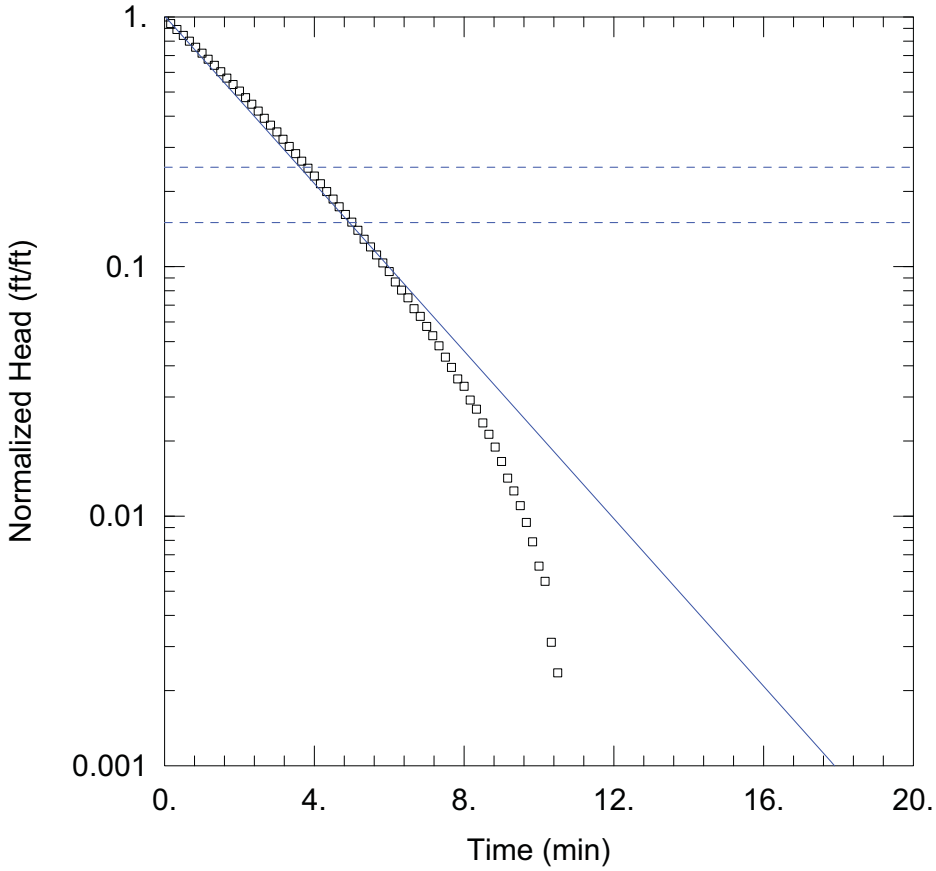

MW-63 TEST8

Data Set: J:\...\MW-63 T8.aqt
Date: 04/26/07 Time: 23:20:20

PROJECT INFORMATION

Company: GZA GeoEnvironmental
Client: Indian Point Energy Center
Project: 41.0017869.10
Location: Buchanan, New York
Test Well: MW-63 (110.0-119.7)
Test Date: 11/10/06

AQUIFER DATA

Saturated Thickness: 300. ft Anisotropy Ratio (Kz/Kr): 0.1

WELL DATA (MW-63 Test 8)

Initial Displacement: 18.24 ft Static Water Column Height: 107.2 ft
Total Well Penetration Depth: 107.2 ft Screen Length: 9.7 ft
Casing Radius: 0.08333 ft Wellbore Radius: 0.159 ft

SOLUTION

Aquifer Model: Unconfined Solution Method: Hvorslev

K = 1.049 ft/day y0 = 18.44 ft

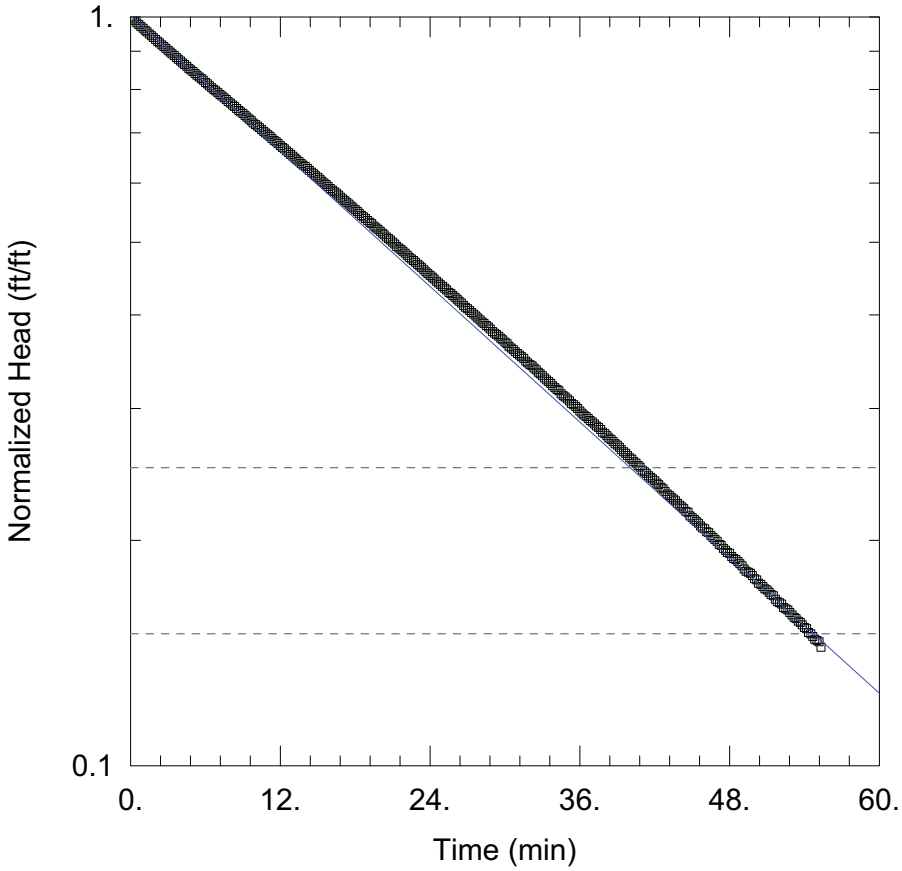

MW-63 TEST7

Data Set: J:\...\MW-63 T7.aqt
Date: 04/26/07 Time: 23:20:12

PROJECT INFORMATION

Company: GZA GeoEnvironmental
Client: Indian Point Energy Center
Project: 41.0017869.10
Location: Buchanan, New York
Test Well: MW-63 (100.0-109.7)
Test Date: 11/13/06

AQUIFER DATA

Saturated Thickness: 300. ft Anisotropy Ratio (Kz/Kr): 0.1

WELL DATA (MW-63 Test 7)

Initial Displacement: 23.89 ft Static Water Column Height: 97.2 ft
Total Well Penetration Depth: 97.2 ft Screen Length: 9.7 ft
Casing Radius: 0.08333 ft Wellbore Radius: 0.159 ft

SOLUTION

Aquifer Model: Unconfined Solution Method: Hvorslev

K = 0.09426 ft/day y0 = 24.01 ft

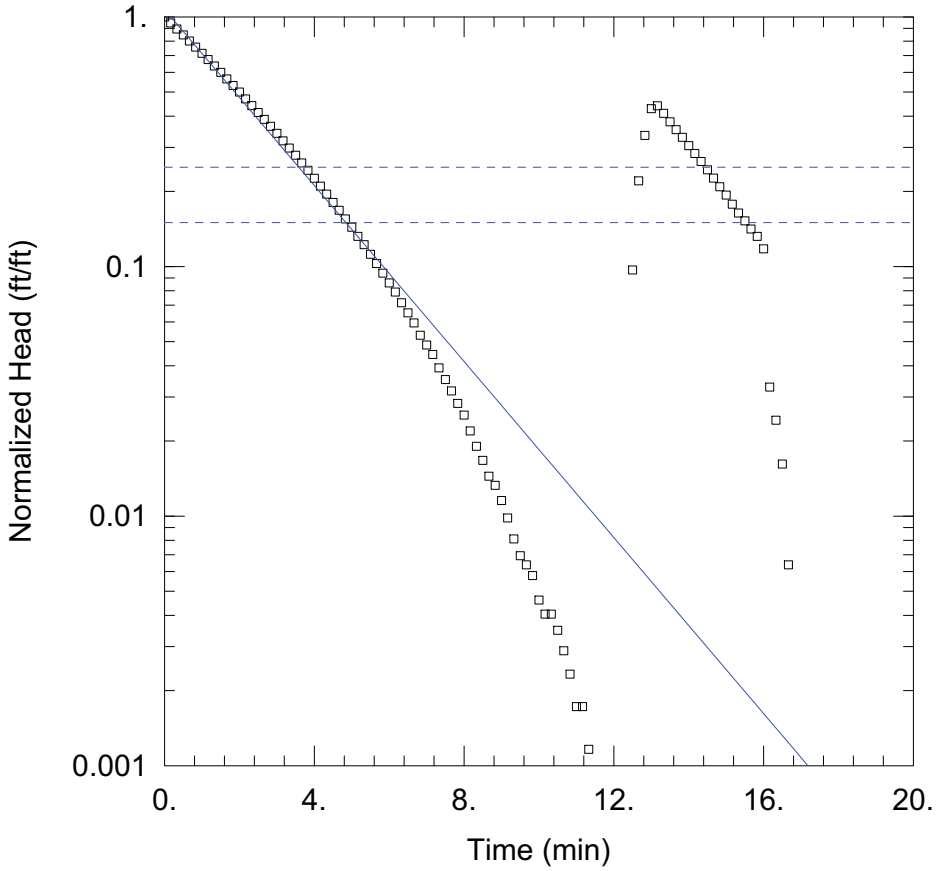

MW-63 TEST6

Data Set: J:\...\MW-63 T6.aqt
Date: 04/23/07 Time: 16:42:33

PROJECT INFORMATION

Company: GZA GeoEnvironmental
Client: Indian Point Energy Center
Project: 41.0017869.10
Location: Buchanan, New York
Test Well: MW-63 (88.3-98.0)
Test Date: 11/13/06

AQUIFER DATA

Saturated Thickness: 300. ft Anisotropy Ratio (Kz/Kr): 0.1

WELL DATA (MW-63 Test 6)

Initial Displacement: 24.93 ft Static Water Column Height: 85.5 ft
Total Well Penetration Depth: 85.5 ft Screen Length: 9.7 ft
Casing Radius: 0.08333 ft Wellbore Radius: 0.159 ft

SOLUTION

Aquifer Model: Unconfined Solution Method: Hvorslev

K = 1.101 ft/day y0 = 26.7 ft

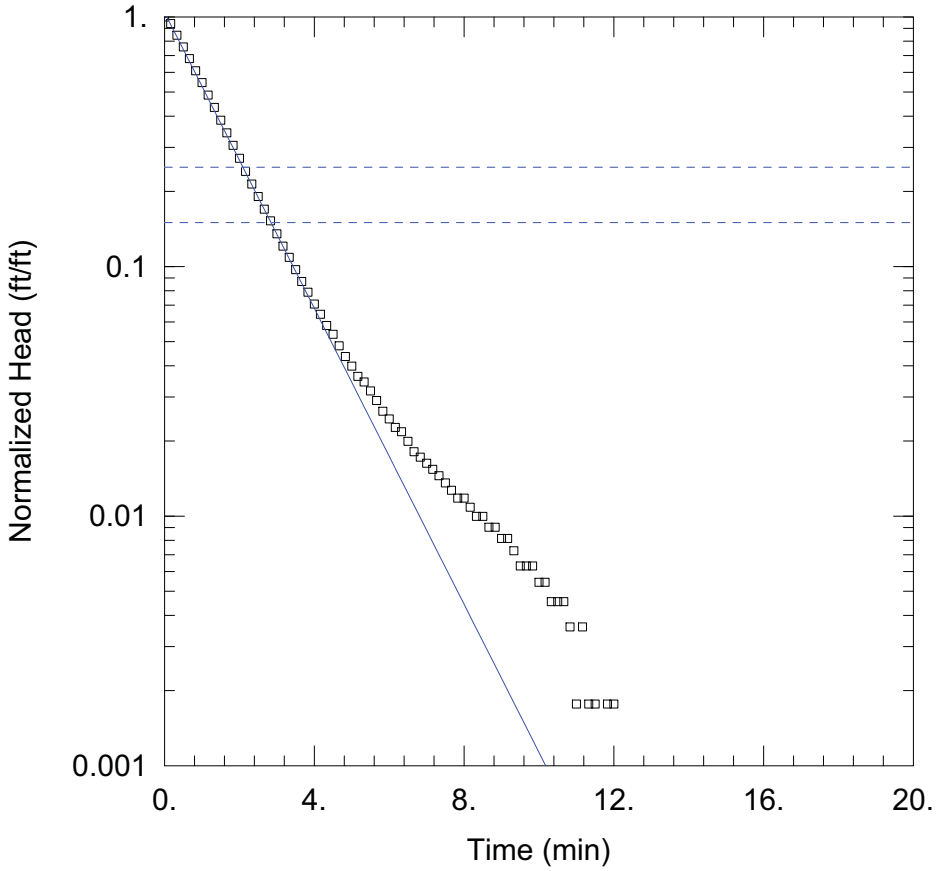

MW-63 TEST5

Data Set: J:\...\MW-63 T5.aqt
Date: 04/23/07 Time: 16:42:18

PROJECT INFORMATION

Company: GZA GeoEnvironmental
Client: Indian Point Energy Center
Project: 41.0017869.10
Location: Buchanan, New York
Test Well: MW-63 (78.6-88.3)
Test Date: 11/13/06

AQUIFER DATA

Saturated Thickness: 300. ft Anisotropy Ratio (Kz/Kr): 0.1

WELL DATA (MW-63 Test 5)

Initial Displacement: 15.84 ft Static Water Column Height: 75.8 ft
Total Well Penetration Depth: 75.8 ft Screen Length: 9.7 ft
Casing Radius: 0.08333 ft Wellbore Radius: 0.159 ft

SOLUTION

Aquifer Model: Unconfined Solution Method: Hvorslev

K = 1.852 ft/day y0 = 16.54 ft

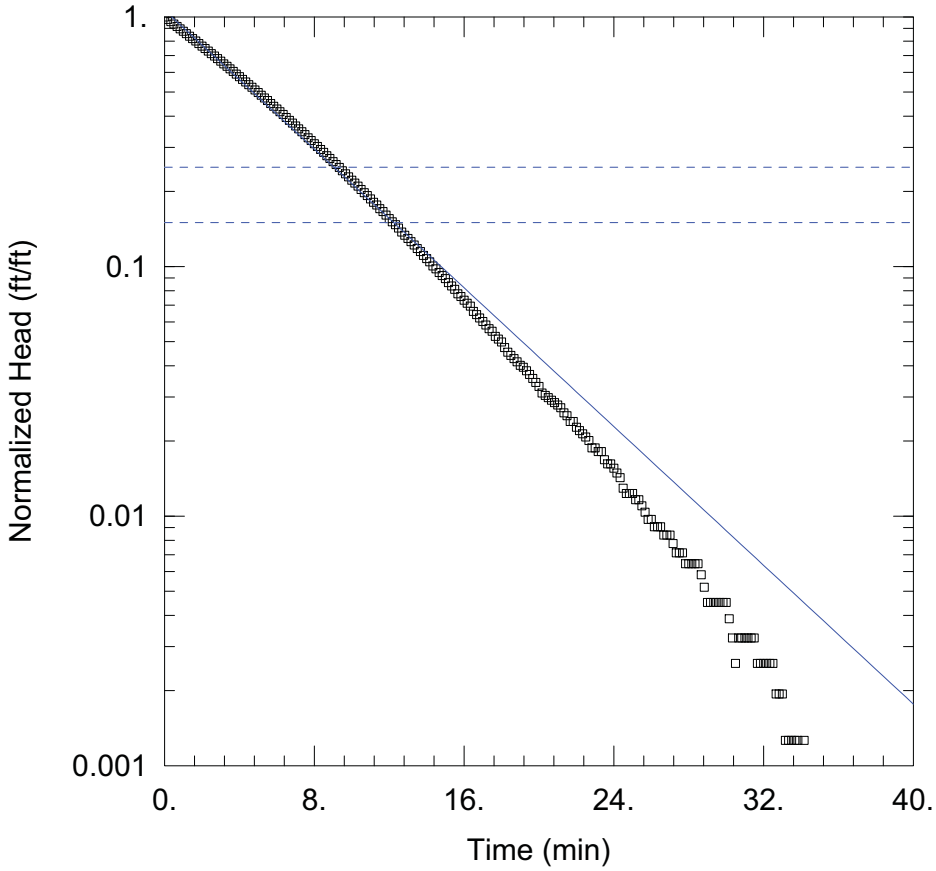

MW-63 TEST4

Data Set: J:\...\MW-63 T4.aqt
Date: 04/23/07 Time: 16:41:59

PROJECT INFORMATION

Company: GZA GeoEnvironmental
Client: Indian Point Energy Center
Project: 41.0017869.10
Location: Buchanan, New York
Test Well: MW-63 (71.0-80.7)
Test Date: 11/13/06

AQUIFER DATA

Saturated Thickness: 300. ft Anisotropy Ratio (Kz/Kr): 0.1

WELL DATA (MW-63 Test 4)

Initial Displacement: 22.17 ft Static Water Column Height: 68.2 ft
Total Well Penetration Depth: 68.2 ft Screen Length: 9.7 ft
Casing Radius: 0.08333 ft Wellbore Radius: 0.159 ft

SOLUTION

Aquifer Model: Unconfined Solution Method: Hvorslev

K = 0.434 ft/day y0 = 23.58 ft

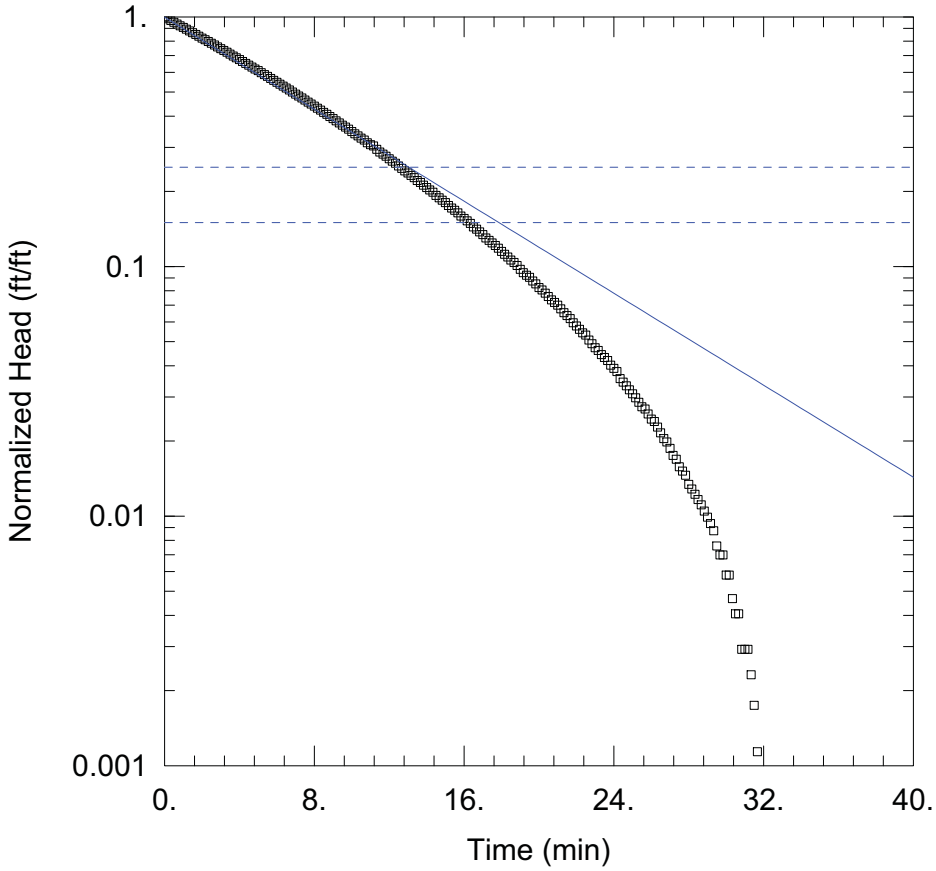

MW-63 TEST3

Data Set: J:\...\MW-63 T3.aqt
Date: 04/23/07 Time: 16:41:14

PROJECT INFORMATION

Company: GZA GeoEnvironmental
Client: Indian Point Energy Center
Project: 41.0017869.10
Location: Buchanan, New York
Test Well: MW-63 (60.8-70.5)
Test Date: 11/14/06

AQUIFER DATA

Saturated Thickness: 300. ft Anisotropy Ratio (Kz/Kr): 0.1

WELL DATA (MW-63 Test3)

Initial Displacement: 24.62 ft Static Water Column Height: 58. ft
Total Well Penetration Depth: 58. ft Screen Length: 9.7 ft
Casing Radius: 0.08333 ft Wellbore Radius: 0.159 ft

SOLUTION

Aquifer Model: Unconfined Solution Method: Hvorslev

K = 0.2877 ft/day y0 = 24.56 ft

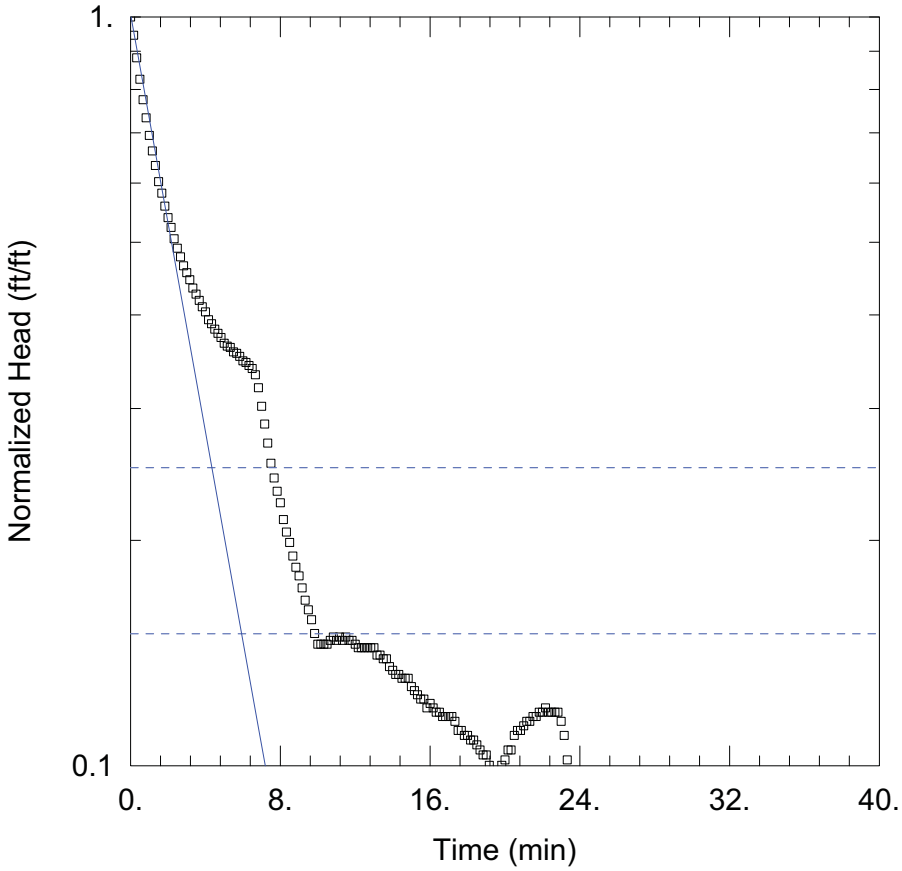

MW-63 TEST2

Data Set: J:\...\MW-63 T2.aqt
Date: 04/26/07 Time: 23:20:03

PROJECT INFORMATION

Company: GZA GeoEnvironmental
Client: Indian Point Energy Center
Project: 41.0017869.10
Location: Buchanan, New York
Test Well: MW-63 (50.5-60.2)
Test Date: 10/17/06

AQUIFER DATA

Saturated Thickness: 300. ft Anisotropy Ratio (Kz/Kr): 0.1

WELL DATA (MW-63 Test 2)

Initial Displacement: 8.89 ft Static Water Column Height: 47.7 ft
Total Well Penetration Depth: 47.7 ft Screen Length: 9.7 ft
Casing Radius: 0.08333 ft Wellbore Radius: 0.159 ft

SOLUTION

Aquifer Model: Unconfined Solution Method: Hvorslev

K = 0.8719 ft/day y0 = 8.987 ft

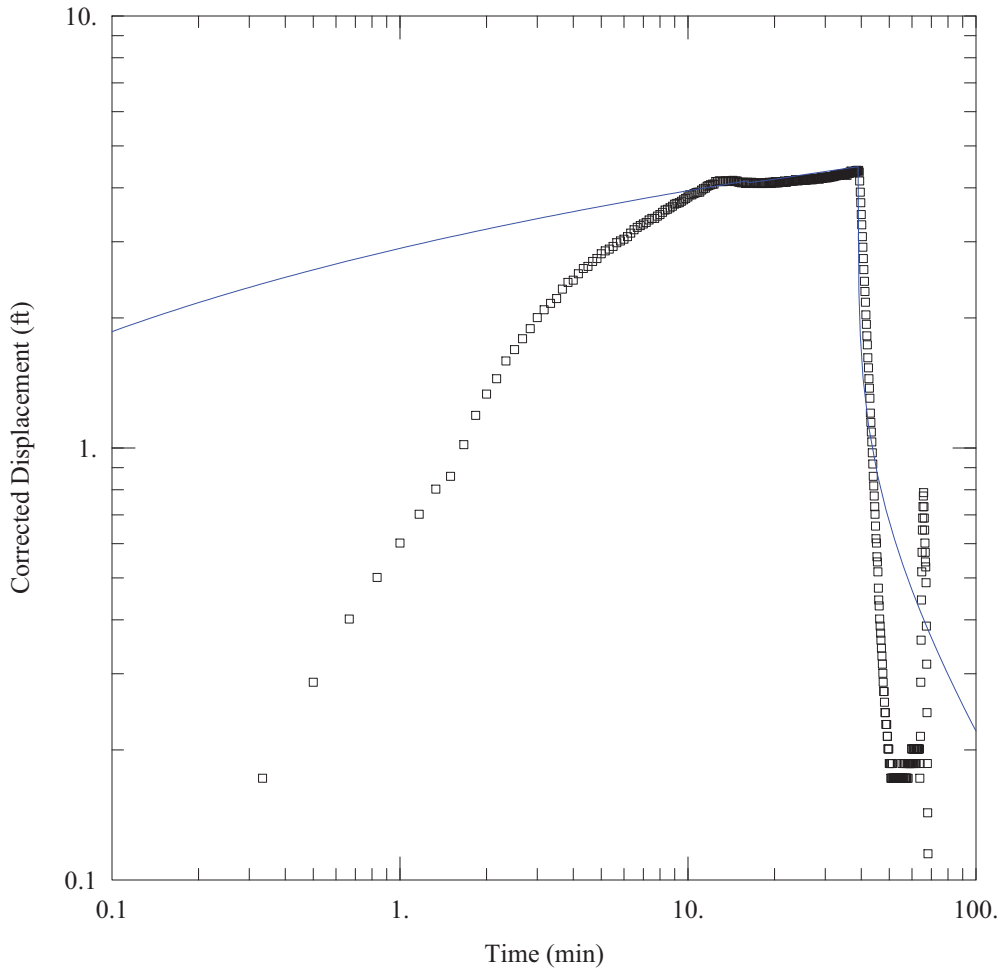

MW-63 T1 PACKERED EXTRACTION

Data Set: J:\...\MW-63 T1 theis.aqt
Date: 09/10/07 Time: 17:48:55

PROJECT INFORMATION

Company: GZA GeoEnvironmental
Client: Indian Point Energy Center
Project: 41.0017869.10
Location: Buchanan, NY
Test Well: MW-63
Test Date: 10/12/06

WELL DATA

Pumping Wells

Well Name	X (ft)	Y (ft)
MW-63	0	0

Observation Wells

Well Name	X (ft)	Y (ft)
▫ MW-63	0	0

SOLUTION

Aquifer Model: Unconfined
Solution Method: Theis

T = 96.47 ft^2/day
S = 0.0099
Kz/Kr = 1.
b = 300. ft

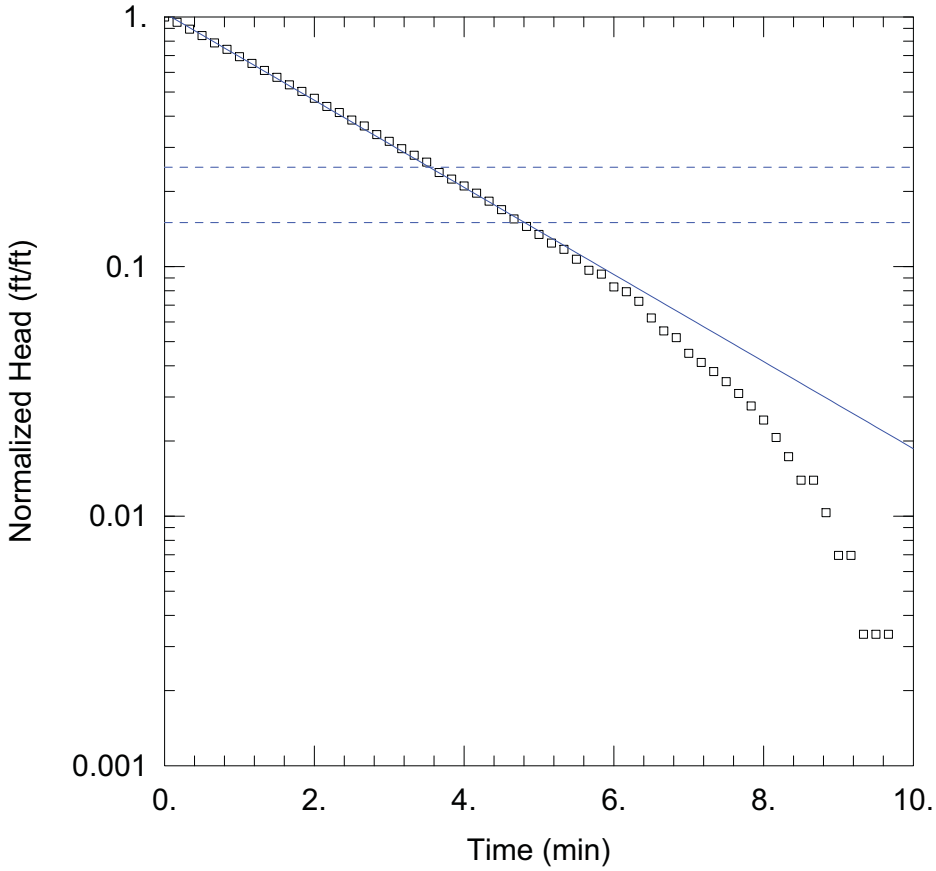

MW-63 TEST1

Data Set: J:\...\MW-63 T1.aqt
Date: 04/23/07 Time: 16:40:20

PROJECT INFORMATION

Company: GZA GeoEnvironmental
Client: Indian Point Energy Center
Project: 41.0017869.10
Location: Buchanan, New York
Test Well: MW-63 (12.5-50.5)
Test Date: 10/12/06

AQUIFER DATA

Saturated Thickness: 300. ft Anisotropy Ratio (Kz/Kr): 0.1

WELL DATA (MW-63 Test 1)

Initial Displacement: 4.164 ft Static Water Column Height: 50.5 ft
Total Well Penetration Depth: 50.5 ft Screen Length: 14. ft
Casing Radius: 0.08333 ft Wellbore Radius: 0.159 ft

SOLUTION

Aquifer Model: Unconfined Solution Method: Hvorslev

K = 0.8076 ft/day y0 = 4.312 ft

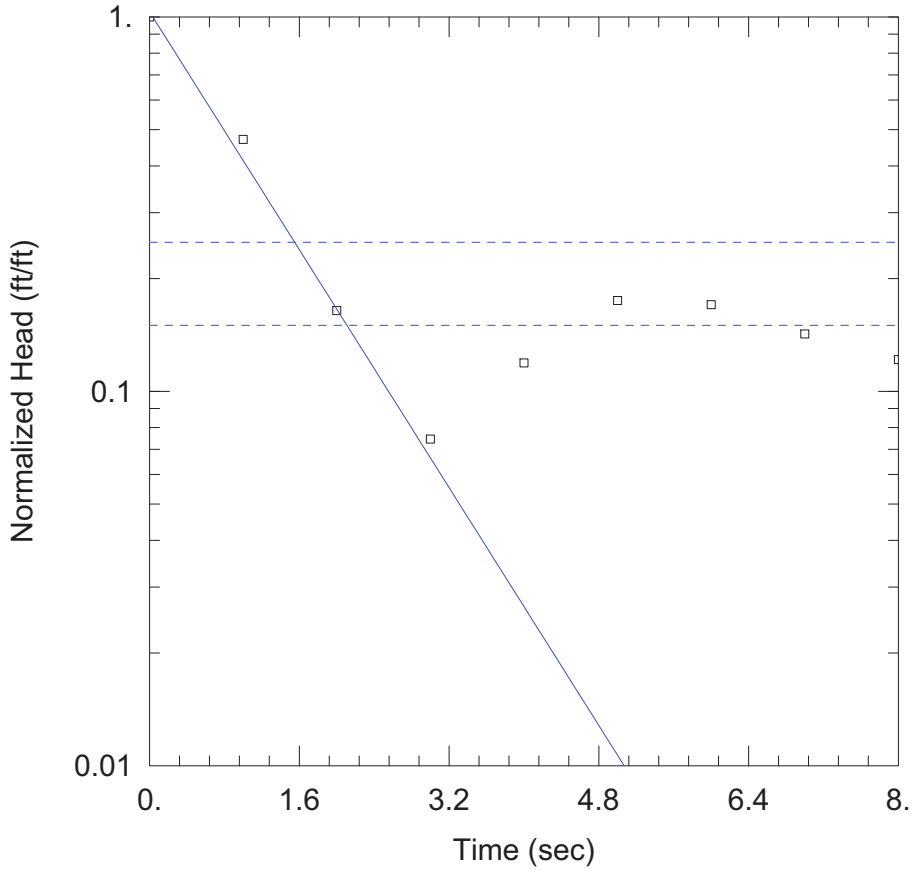

MW-63-35 MAY07 PNEUMATIC SLUG (TEST1)

Data Set: J:\...\MW-63-35 May07 T1.aqt
Date: 07/01/07 Time: 18:13:59

PROJECT INFORMATION

Company: GZA GeoEnvironmental
Client: Indian Point Energy Center
Project: 41.0017869.10
Location: Buchanan, New York
Test Well: MW-63-35
Test Date: 5/9/07

AQUIFER DATA

Saturated Thickness: 300. ft Anisotropy Ratio (Kz/Kr): 0.1

WELL DATA (MW-63-35)

Initial Displacement: 1.637 ft Static Water Column Height: 21.57 ft
Total Well Penetration Depth: 21.57 ft Screen Length: 7. ft
Casing Radius: 0.04167 ft Wellbore Radius: 0.159 ft

SOLUTION

Aquifer Model: Unconfined Solution Method: Hvorslev

K = 48.36 ft/day y0 = 1.69 ft

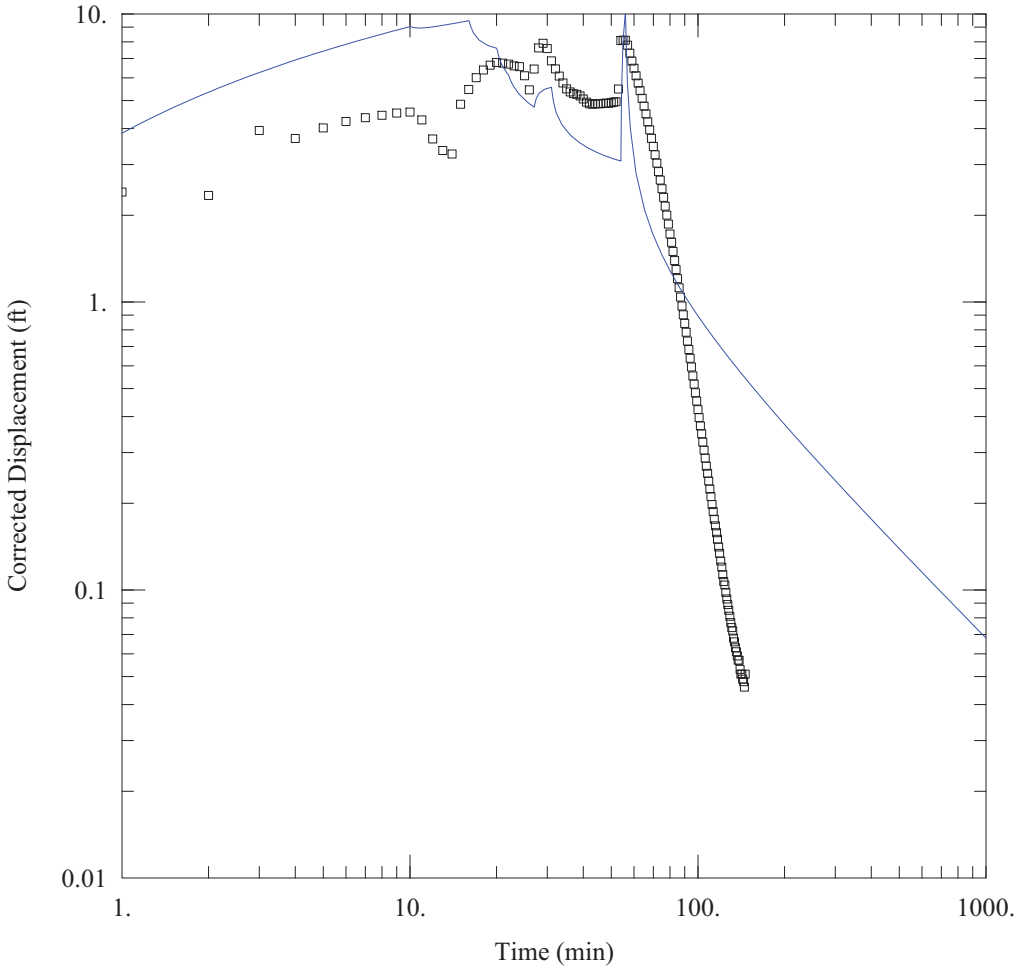

MW-65-48 EXTRACTION TEST

Data Set: J:\...\MW-65-48theis.aqt
Date: 09/12/07 Time: 14:26:12

PROJECT INFORMATION

Company: GZA GeoEnvironmental
Client: Indian Point Energy Center
Project: 41.0017869.10
Location: Buchanan, NY
Test Well: MW-65-48
Test Date: 12/29/06

WELL DATA

Pumping Wells

Well Name	X (ft)	Y (ft)
MW-65-48	0	0

Observation Wells

Well Name	X (ft)	Y (ft)
▫ MW-65-48	0	0

SOLUTION

Aquifer Model: Unconfined
Solution Method: Theis

T = 3.895 ft^2/day
S = 0.05296
Kz/Kr = 1.
b = 300. ft

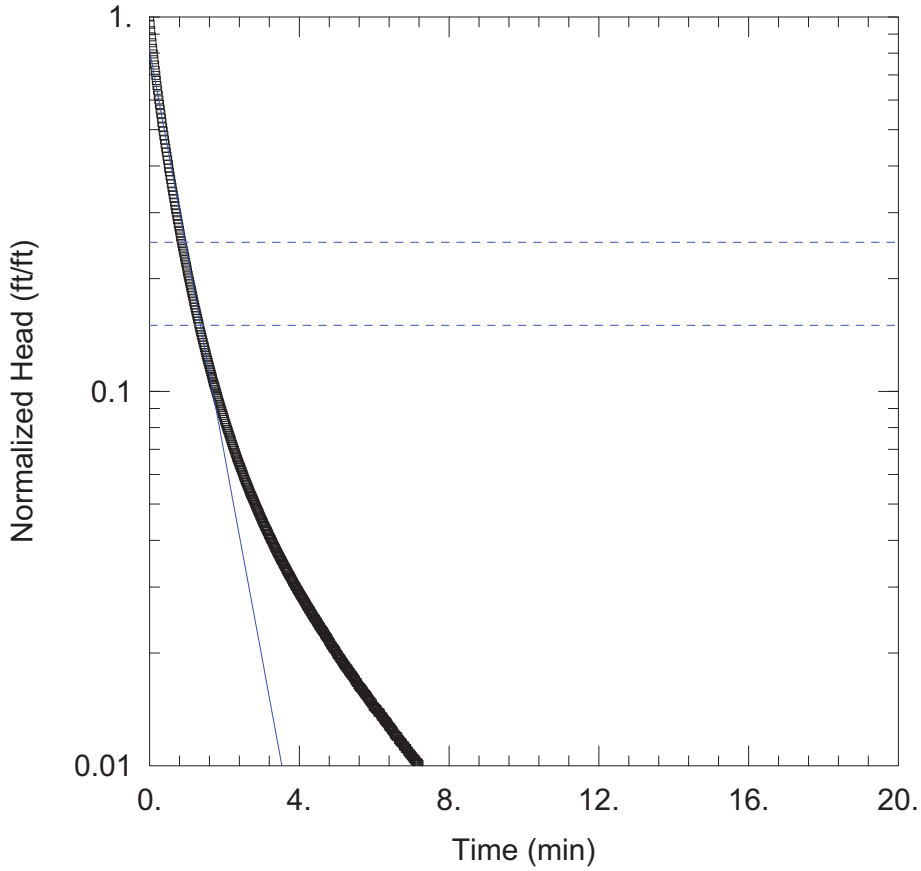

MW65-80 SLUG TEST

Data Set: J:\...\MW65-80.aqt
Date: 09/12/07 Time: 14:26:47

PROJECT INFORMATION

Company: GZA GeoEnvironmental
Client: Indian Point Energy Center
Project: 41.0017869.10
Location: Buchanan, New York
Test Well: MW65-80
Test Date: 12/28/06

AQUIFER DATA

Saturated Thickness: 300. ft
Anisotropy Ratio (Kz/Kr): 0.1

WELL DATA (MW-65-80)

Initial Displacement: 19.42 ft
Static Water Column Height: 46.9 ft
Total Well Penetration Depth: 46.9 ft
Screen Length: 24.5 ft
Casing Radius: 0.04167 ft
Wellbore Radius: 0.159 ft

SOLUTION

Aquifer Model: Unconfined
Solution Method: Hvorslev

K = 0.3931 ft/day
y0 = 15.88 ft

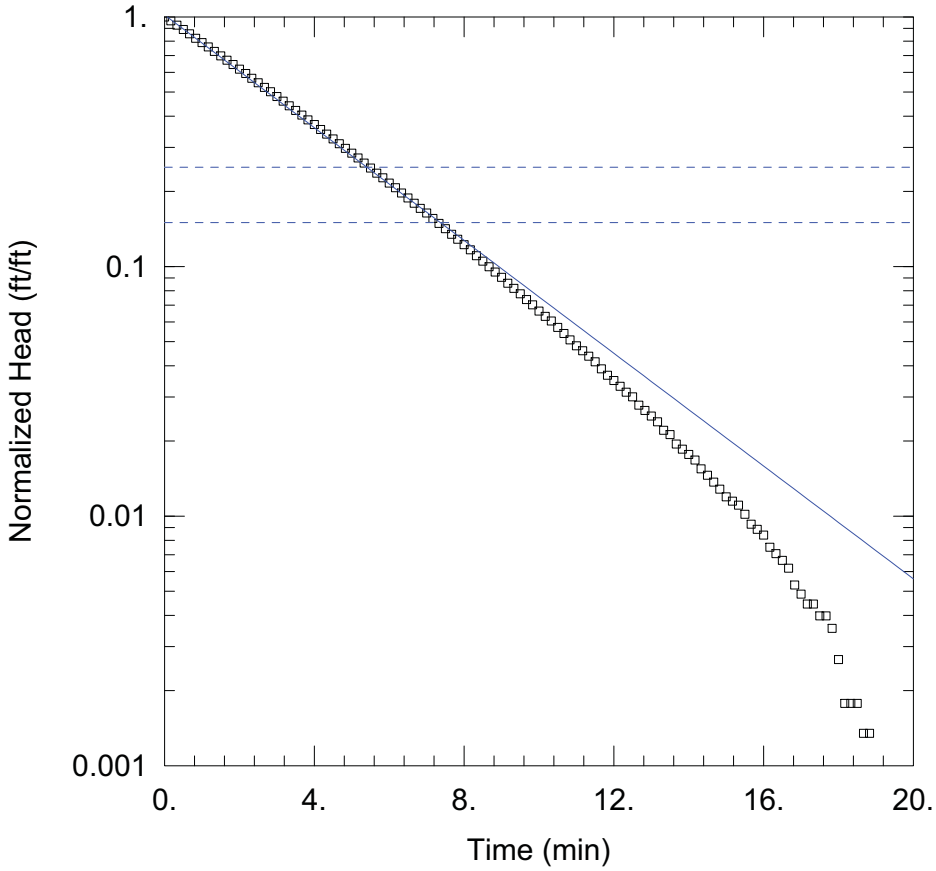

MW-66 (TEST1)

Data Set: J:\...\MW-66 T1.aqt
Date: 04/24/07 Time: 08:49:38

PROJECT INFORMATION

Company: GZA GeoEnvironmental
Client: Indian Point Energy Center
Project: 41.0017869.10
Location: Buchanan, New York
Test Well: MW-66
Test Date: 1/4/07

AQUIFER DATA

Saturated Thickness: 300. ft Anisotropy Ratio (Kz/Kr): 0.1

WELL DATA (MW-66 Test 1)

Initial Displacement: 32.65 ft Static Water Column Height: 188.1 ft
Total Well Penetration Depth: 188.1 ft Screen Length: 18. ft
Casing Radius: 0.08333 ft Wellbore Radius: 0.159 ft

SOLUTION

Aquifer Model: Unconfined Solution Method: Hvorslev

K = 0.4248 ft/day y0 = 33.28 ft

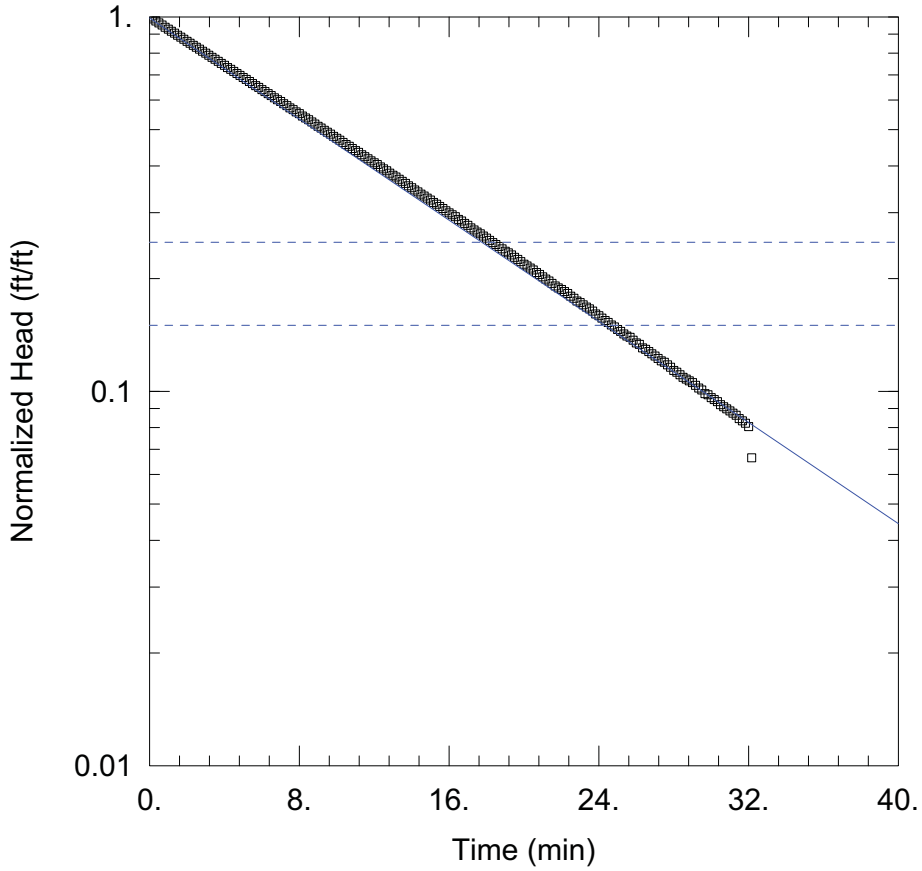

MW-66 (TEST2)

Data Set: J:\...\MW-66 T2.aqt
Date: 04/26/07 Time: 23:25:00

PROJECT INFORMATION

Company: GZA GeoEnvironmental
Client: Indian Point Energy Center
Project: 41.0017869.10
Location: Buchanan, New York
Test Well: MW-66
Test Date: 1/4/07

AQUIFER DATA

Saturated Thickness: 300. ft Anisotropy Ratio (Kz/Kr): 0.1

WELL DATA (MW-66 Test 2)

Initial Displacement: 24.73 ft Static Water Column Height: 169.5 ft
Total Well Penetration Depth: 169.5 ft Screen Length: 9.7 ft
Casing Radius: 0.08333 ft Wellbore Radius: 0.159 ft

SOLUTION

Aquifer Model: Unconfined Solution Method: Hvorslev

K = 0.2108 ft/day y0 = 24.57 ft

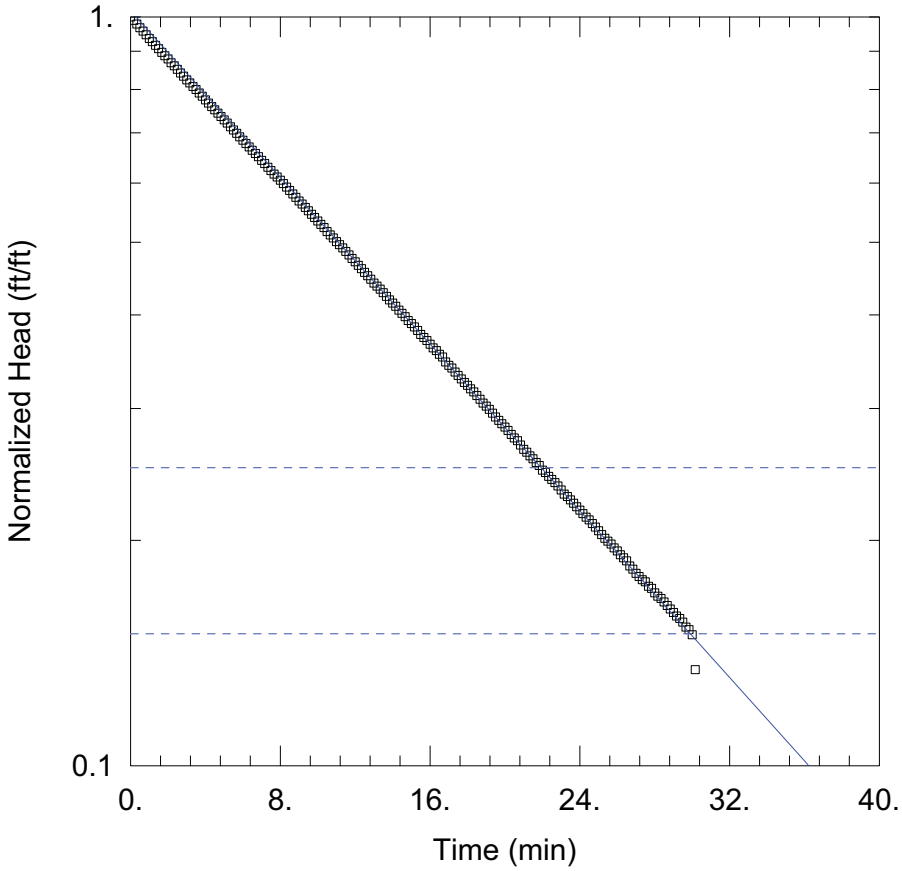

MW-66 (TEST3)

Data Set: J:\...\MW-66 T3.aqt
Date: 04/26/07 Time: 23:25:08

PROJECT INFORMATION

Company: GZA GeoEnvironmental
Client: Indian Point Energy Center
Project: 41.0017869.10
Location: Buchanan, New York
Test Well: MW-66
Test Date: 1/4/07

AQUIFER DATA

Saturated Thickness: 300. ft Anisotropy Ratio (Kz/Kr): 0.1

WELL DATA (MW-66 Test 3)

Initial Displacement: 24.57 ft Static Water Column Height: 159. ft
Total Well Penetration Depth: 159. ft Screen Length: 9.7 ft
Casing Radius: 0.08333 ft Wellbore Radius: 0.159 ft

SOLUTION

Aquifer Model: Unconfined Solution Method: Hvorslev

K = 0.1738 ft/day y0 = 25.04 ft

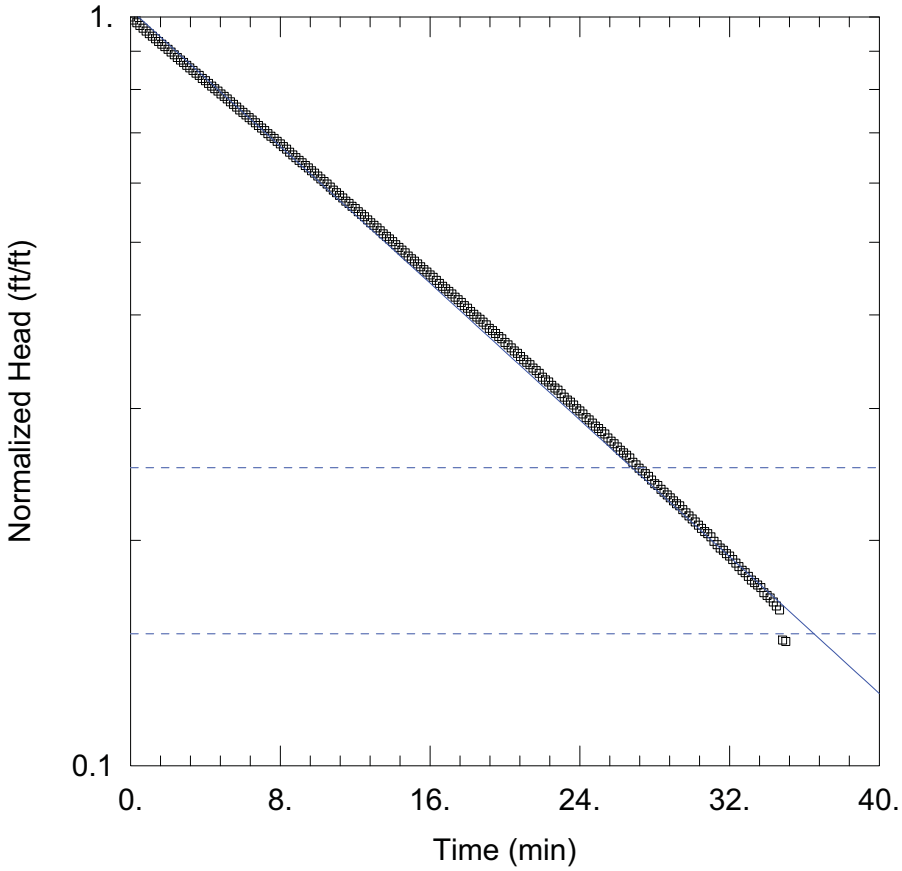

MW-66 (TEST4)

Data Set: J:\...\MW-66 T4.aqt
Date: 04/24/07 Time: 08:50:48

PROJECT INFORMATION

Company: GZA GeoEnvironmental
Client: Indian Point Energy Center
Project: 41.0017869.10
Location: Buchanan, New York
Test Well: MW-66
Test Date: 1/5/07

AQUIFER DATA

Saturated Thickness: 300. ft Anisotropy Ratio (Kz/Kr): 0.1

WELL DATA (MW-66 Test 4)

Initial Displacement: 21.25 ft Static Water Column Height: 148.9 ft
Total Well Penetration Depth: 148.9 ft Screen Length: 9.7 ft
Casing Radius: 0.08333 ft Wellbore Radius: 0.159 ft

SOLUTION

Aquifer Model: Unconfined Solution Method: Hvorslev

K = 0.1426 ft/day y0 = 21.73 ft

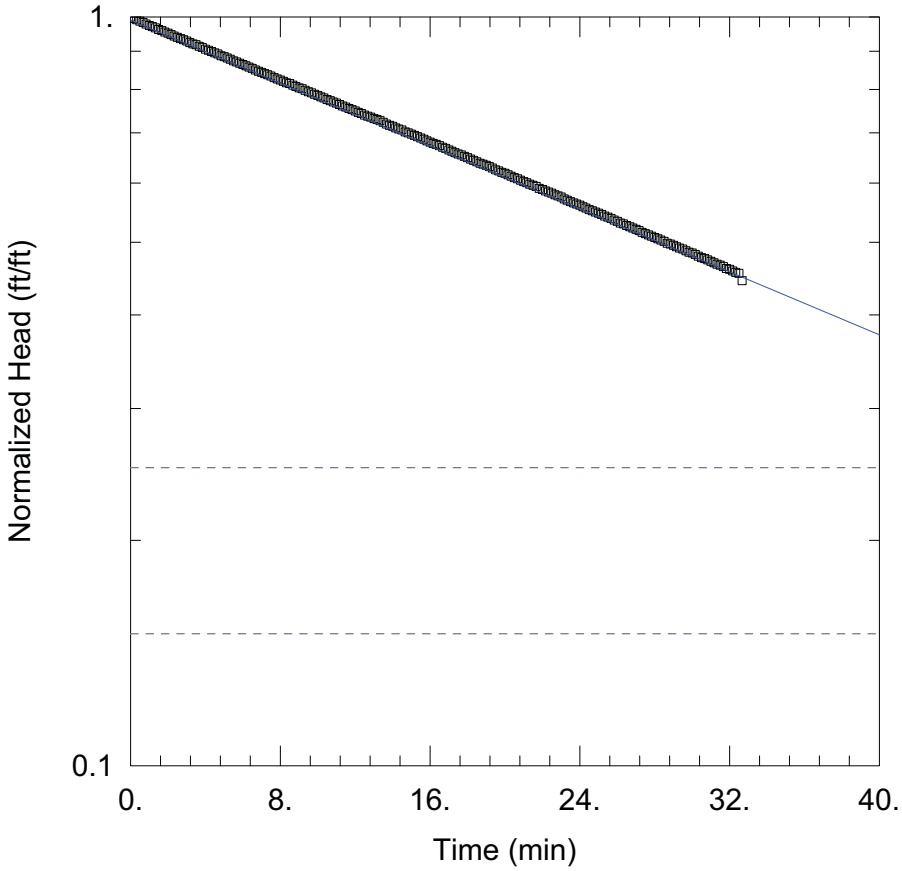

MW-66 (TEST5)

Data Set: J:\...\MW-66 T5.aqt
Date: 04/26/07 Time: 23:25:15

PROJECT INFORMATION

Company: GZA GeoEnvironmental
Client: Indian Point Energy Center
Project: 41.0017869.10
Location: Buchanan, New York
Test Well: MW-66
Test Date: 1/5/07

AQUIFER DATA

Saturated Thickness: 300. ft Anisotropy Ratio (Kz/Kr): 0.1

WELL DATA (MW-66 Test 5)

Initial Displacement: 21.23 ft Static Water Column Height: 139.6 ft
Total Well Penetration Depth: 139.6 ft Screen Length: 9.7 ft
Casing Radius: 0.08333 ft Wellbore Radius: 0.159 ft

SOLUTION

Aquifer Model: Unconfined Solution Method: Hvorslev

K = 0.06558 ft/day y0 = 21.01 ft

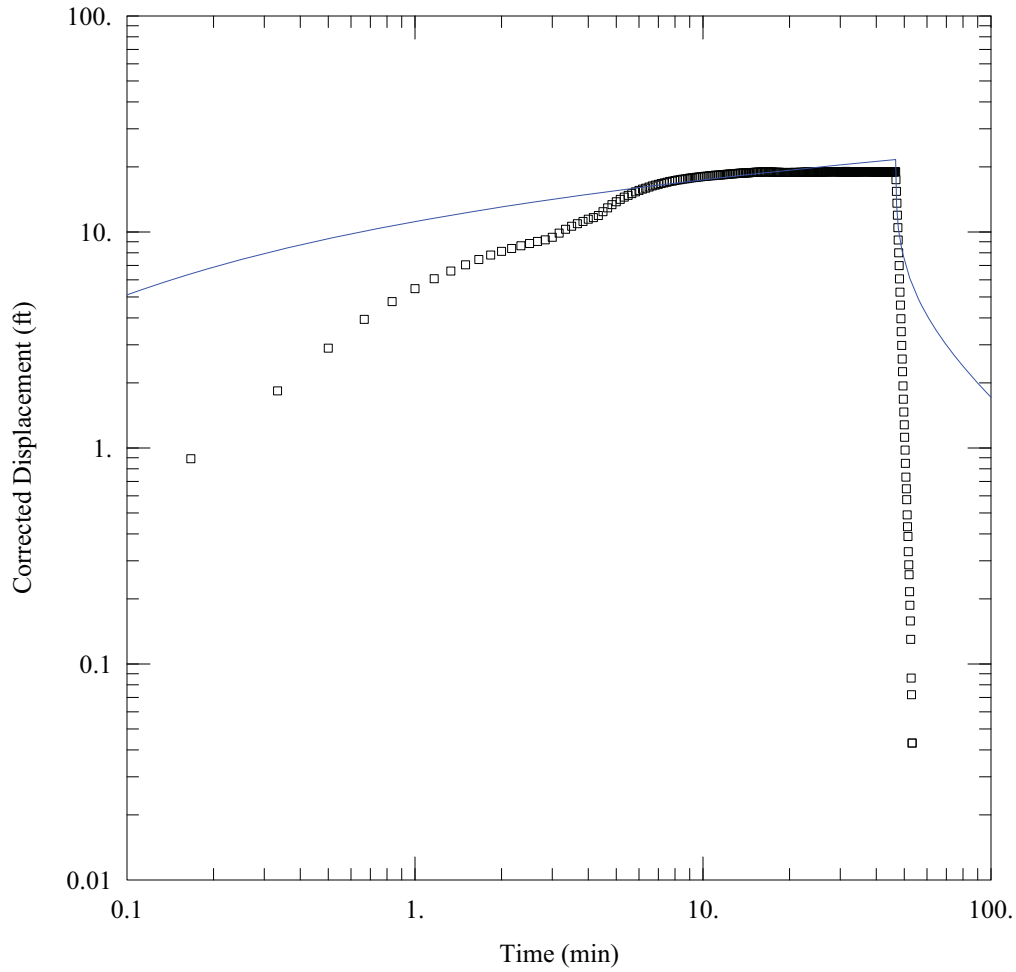

MW-66 (TEST6)

Data Set: C:\Documents and Settings\administrator.GZA\Desktop\pdf\MW-66 T6 theis.aqt
Date: 04/25/07 Time: 22:40:28

PROJECT INFORMATION

Company: GZA GeoEnvironmental
Client: Indian Point Energy Center
Project: 41.0017869.10
Location: Buchanan, NY
Test Well: MW-66
Test Date: 1/5/07

WELL DATA

Pumping Wells

Well Name	X (ft)	Y (ft)
MW-66	0	0

Observation Wells

Well Name	X (ft)	Y (ft)
▫ MW-66	0	0

SOLUTION

Aquifer Model: Unconfined
Solution Method: Theis

T = 14.03 ft^2/day
S = 0.01463
Kz/Kr = 1.
b = 300. ft

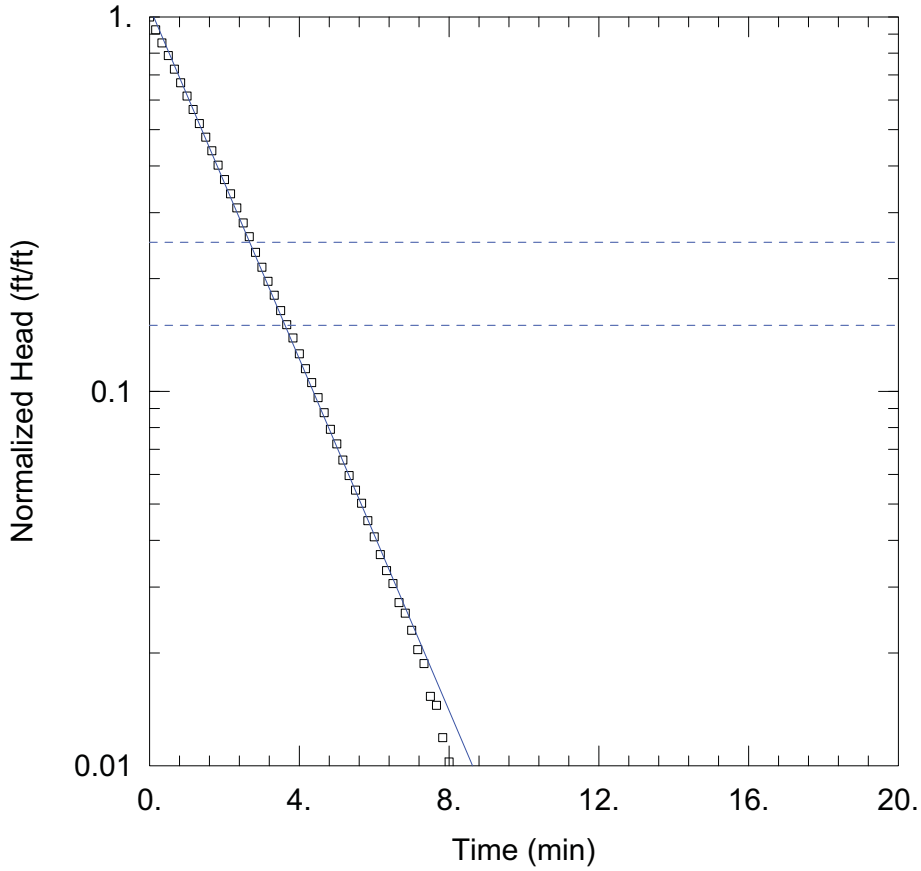

MW-66 (TEST7)

Data Set: J:\...\MW-66 T7.aqt
Date: 04/26/07 Time: 23:25:22

PROJECT INFORMATION

Company: GZA GeoEnvironmental
Client: Indian Point Energy Center
Project: 41.0017869.10
Location: Buchanan, New York
Test Well: MW-66
Test Date: 1/5/07

AQUIFER DATA

Saturated Thickness: 300. ft Anisotropy Ratio (Kz/Kr): 0.1

WELL DATA (MW-66 Test7)

Initial Displacement: 16.9 ft Static Water Column Height: 107.4 ft
Total Well Penetration Depth: 107.4 ft Screen Length: 9.7 ft
Casing Radius: 0.08333 ft Wellbore Radius: 0.159 ft

SOLUTION

Aquifer Model: Unconfined Solution Method: Hvorslev

K = 1.467 ft/day y0 = 17.97 ft

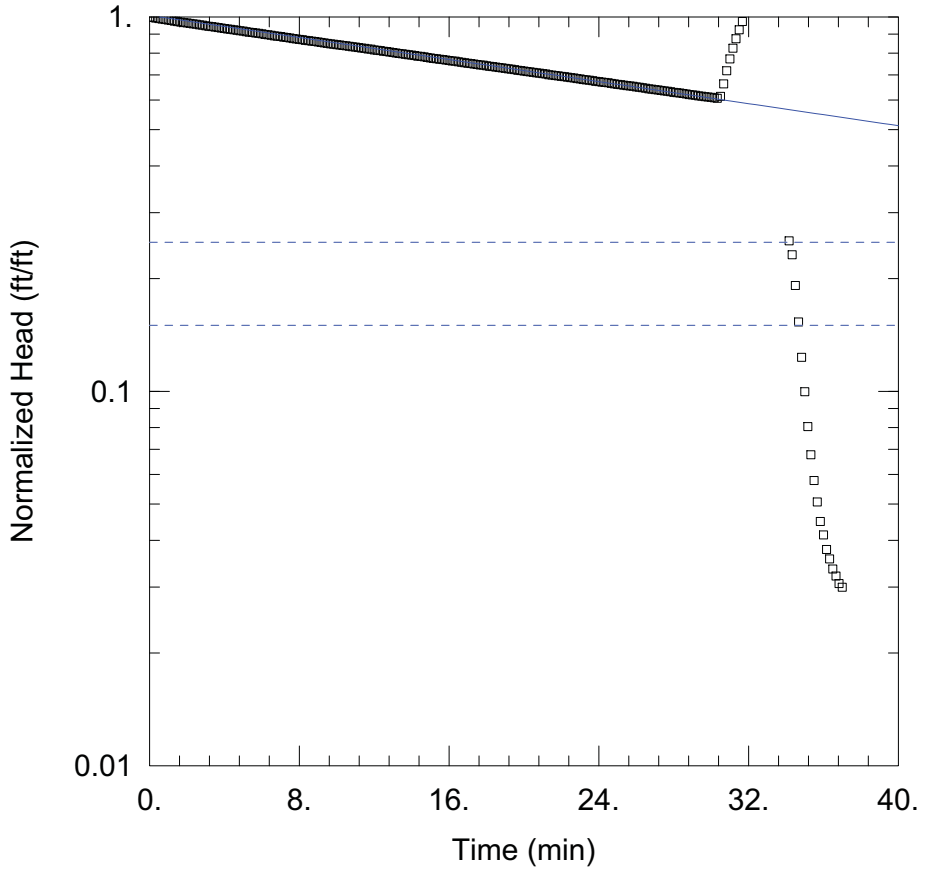

MW-66 (TEST8)

Data Set: J:\...\MW-66 T8.aqt
Date: 04/24/07 Time: 08:53:27

PROJECT INFORMATION

Company: GZA GeoEnvironmental
Client: Indian Point Energy Center
Project: 41.0017869.10
Location: Buchanan, New York
Test Well: MW-66
Test Date: 1/5/07

AQUIFER DATA

Saturated Thickness: 300. ft Anisotropy Ratio (Kz/Kr): 0.1

WELL DATA (MW-66 Test8)

Initial Displacement: 20.19 ft Static Water Column Height: 95.4 ft
Total Well Penetration Depth: 95.4 ft Screen Length: 9.7 ft
Casing Radius: 0.08333 ft Wellbore Radius: 0.159 ft

SOLUTION

Aquifer Model: Unconfined Solution Method: Hvorslev

K = 0.04596 ft/day y0 = 20.37 ft

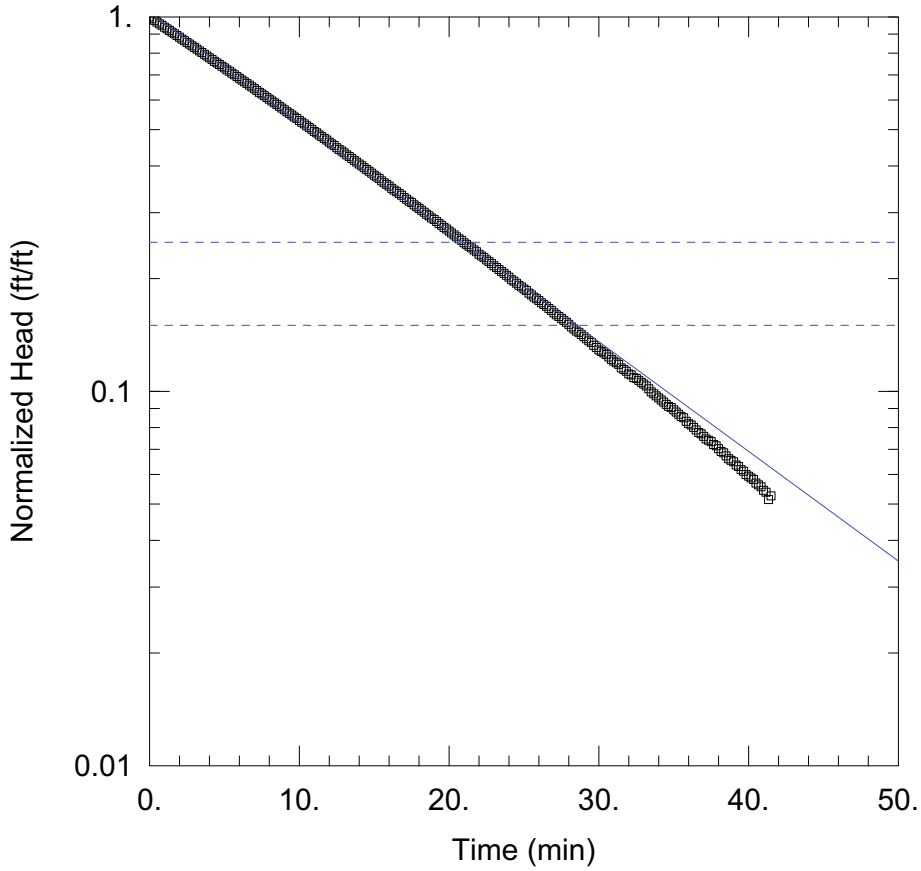

MW-66 (TEST9)

Data Set: J:\...\MW-66 T9.aqt
Date: 04/26/07 Time: 23:25:30

PROJECT INFORMATION

Company: GZA GeoEnvironmental
Client: Indian Point Energy Center
Project: 41.0017869.10
Location: Buchanan, New York
Test Well: MW-66
Test Date: 1/8/07

AQUIFER DATA

Saturated Thickness: 300. ft Anisotropy Ratio (Kz/Kr): 0.1

WELL DATA (MW-66 Test9)

Initial Displacement: 23.52 ft Static Water Column Height: 81. ft
Total Well Penetration Depth: 81. ft Screen Length: 9.7 ft
Casing Radius: 0.08333 ft Wellbore Radius: 0.159 ft

SOLUTION

Aquifer Model: Unconfined Solution Method: Hvorslev

K = 0.183 ft/day y0 = 24.15 ft

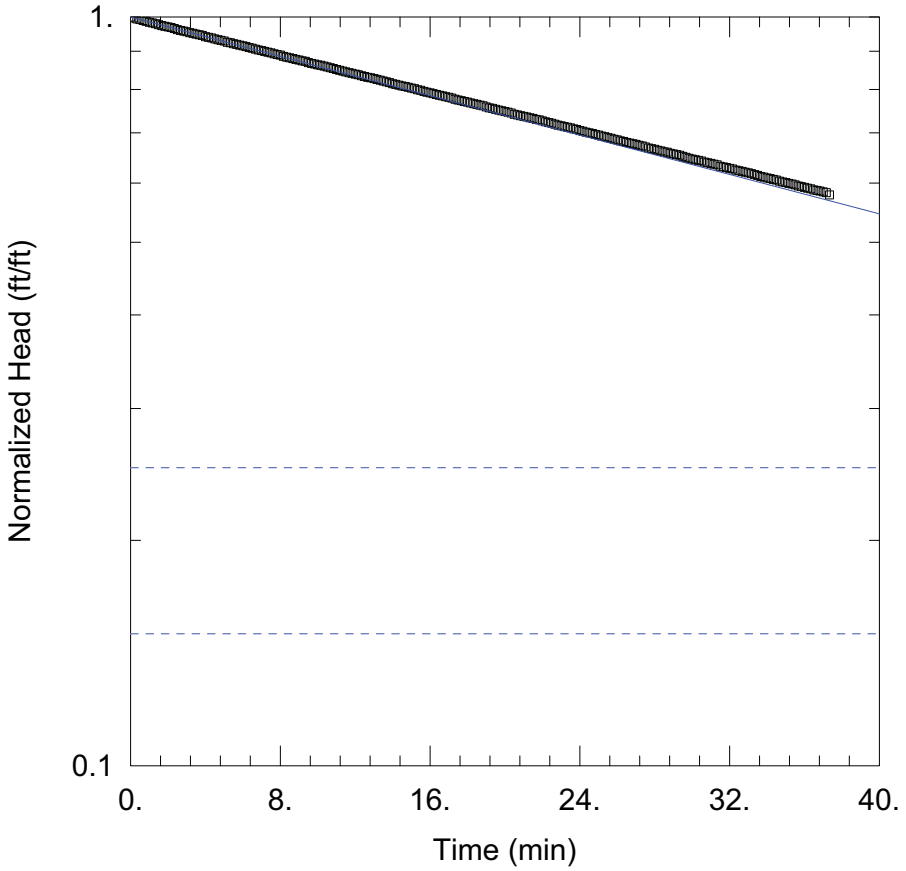

MW-66 (TEST10)

Data Set: J:\...\MW-66 T10.aqt
Date: 04/26/07 Time: 23:25:37

PROJECT INFORMATION

Company: GZA GeoEnvironmental
Client: Indian Point Energy Center
Project: 41.0017869.10
Location: Buchanan, New York
Test Well: MW-66
Test Date: 1/8/07

AQUIFER DATA

Saturated Thickness: 300. ft Anisotropy Ratio (Kz/Kr): 0.1

WELL DATA (MW-66 Test10)

Initial Displacement: 21.26 ft Static Water Column Height: 60.4 ft
Total Well Penetration Depth: 60.4 ft Screen Length: 9.7 ft
Casing Radius: 0.08333 ft Wellbore Radius: 0.159 ft

SOLUTION

Aquifer Model: Unconfined Solution Method: Hvorslev

K = 0.04106 ft/day y0 = 21.26 ft

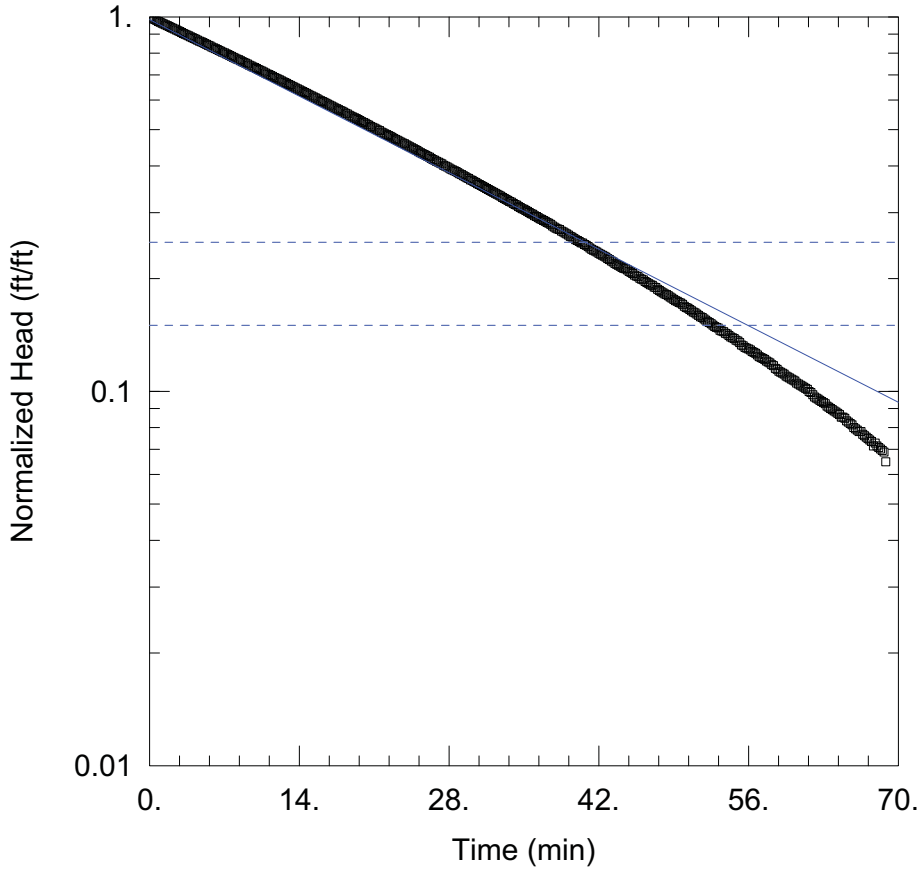

MW-66 (TEST11)

Data Set: J:\...\MW-66 T11.aqt
Date: 04/26/07 Time: 23:25:47

PROJECT INFORMATION

Company: GZA GeoEnvironmental
Client: Indian Point Energy Center
Project: 41.0017869.10
Location: Buchanan, New York
Test Well: MW-66
Test Date: 1/8/07

AQUIFER DATA

Saturated Thickness: 300. ft Anisotropy Ratio (Kz/Kr): 0.1

WELL DATA (MW-66 Test11)

Initial Displacement: 21.71 ft Static Water Column Height: 40.6 ft
Total Well Penetration Depth: 40.6 ft Screen Length: 9.7 ft
Casing Radius: 0.08333 ft Wellbore Radius: 0.159 ft

SOLUTION

Aquifer Model: Unconfined Solution Method: Hvorslev

K = 0.09119 ft/day y0 = 21.35 ft

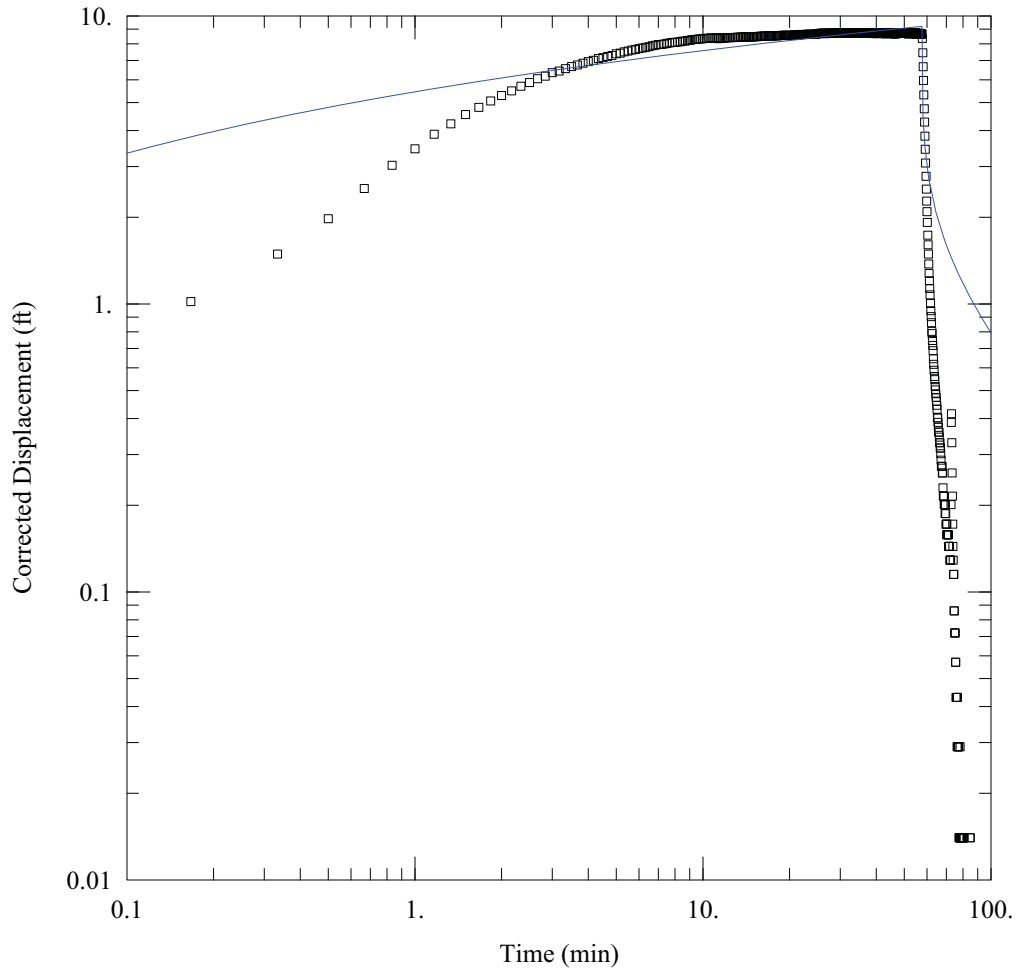

MW-66 (TEST12)

Data Set: C:\Documents and Settings\administrator.GZA\Desktop\pdf\MW-66 T12 theis.aqt
Date: 04/25/07 Time: 22:15:21

PROJECT INFORMATION

Company: GZA GeoEnvironmental
Client: Indian Point Energy Center
Project: 41.0017869.10
Location: Buchanan, NY
Test Well: MW-66
Test Date: 1/8/07

WELL DATA

Pumping Wells

Well Name	X (ft)	Y (ft)
MW-66	0	0

Observation Wells

Well Name	X (ft)	Y (ft)
▫ MW-66	0	0

SOLUTION

Aquifer Model: Unconfined
Solution Method: Theis

T = 62.98 ft^2/day
S = 0.01067
Kz/Kr = 1.
b = 300. ft

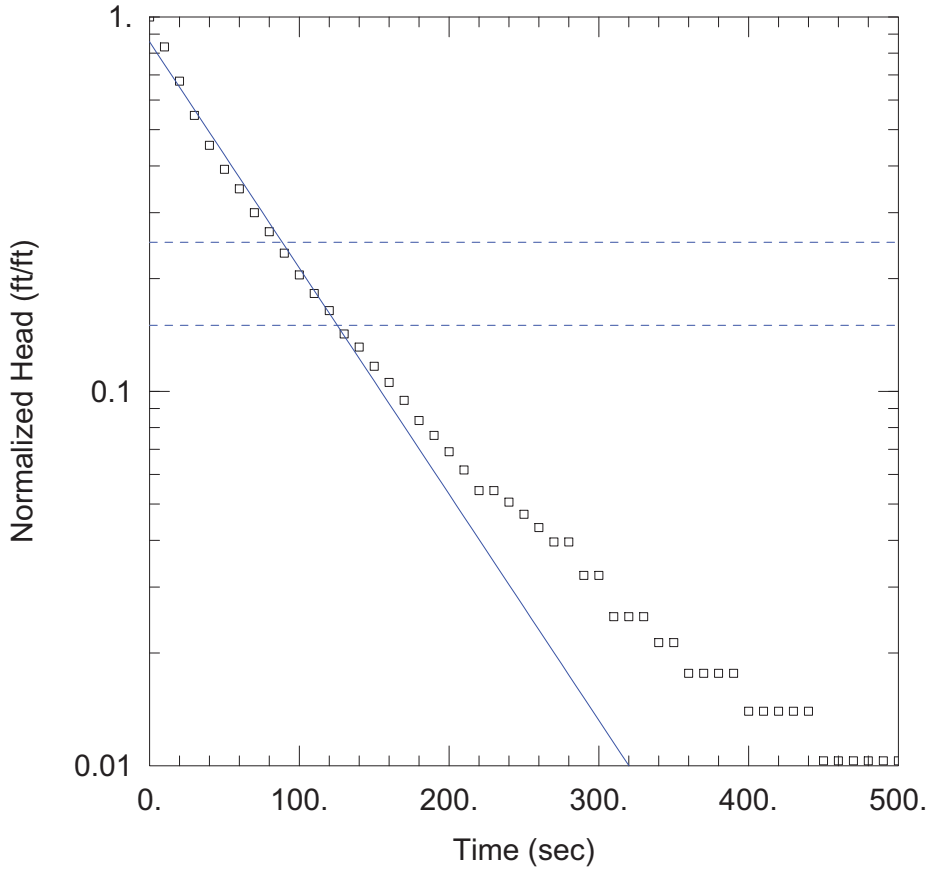

MW-67 (TEST1)

Data Set: J:\...\MW-67 T1.aqt
Date: 08/22/07 Time: 10:55:12

PROJECT INFORMATION

Company: GZA GeoEnvironmental
Client: Indian Point Energy Center
Project: 41.0017869.10
Location: Buchanan, New York
Test Well: MW-67
Test Date: 8/7/07

AQUIFER DATA

Saturated Thickness: 300. ft Anisotropy Ratio (Kz/Kr): 0.1

WELL DATA (MW-67 Test 1)

Initial Displacement: 9.8 ft Static Water Column Height: 336.6 ft
Total Well Penetration Depth: 336.6 ft Screen Length: 18.65 ft
Casing Radius: 0.08333 ft Wellbore Radius: 0.159 ft

SOLUTION

Aquifer Model: Unconfined Solution Method: Hvorslev

K = 1.323 ft/day y0 = 8.407 ft

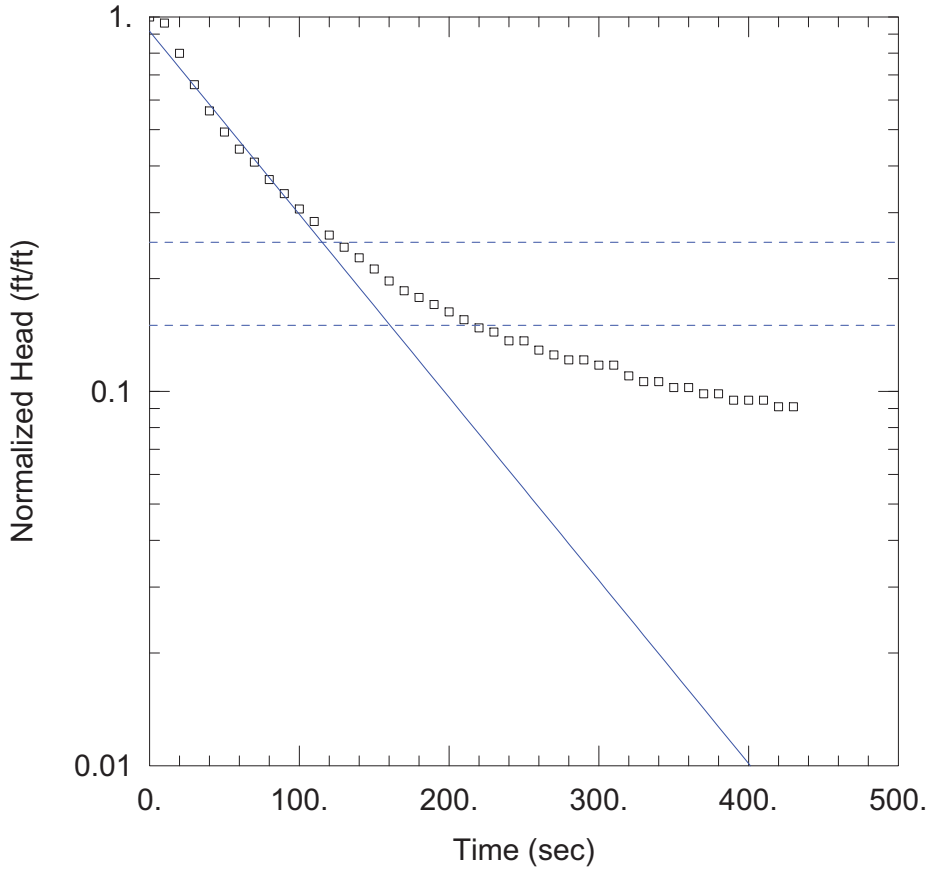

MW-67 (TEST1 EXTRACTION RECOVERY)

Data Set: J:\...\MW-67 T1 (R2).aqt
Date: 08/22/07 Time: 10:56:18

PROJECT INFORMATION

Company: GZA GeoEnvironmental
Client: Indian Point Energy Center
Project: 41.0017869.10
Location: Buchanan, New York
Test Well: MW-67
Test Date: 8/7/07

AQUIFER DATA

Saturated Thickness: 300. ft Anisotropy Ratio (Kz/Kr): 0.1

WELL DATA (MW-67 Test 1)

Initial Displacement: 9.48 ft Static Water Column Height: 336.6 ft
Total Well Penetration Depth: 336.6 ft Screen Length: 18.65 ft
Casing Radius: 0.08333 ft Wellbore Radius: 0.159 ft

SOLUTION

Aquifer Model: Unconfined Solution Method: Hvorslev

K = 1.071 ft/day y0 = 8.682 ft

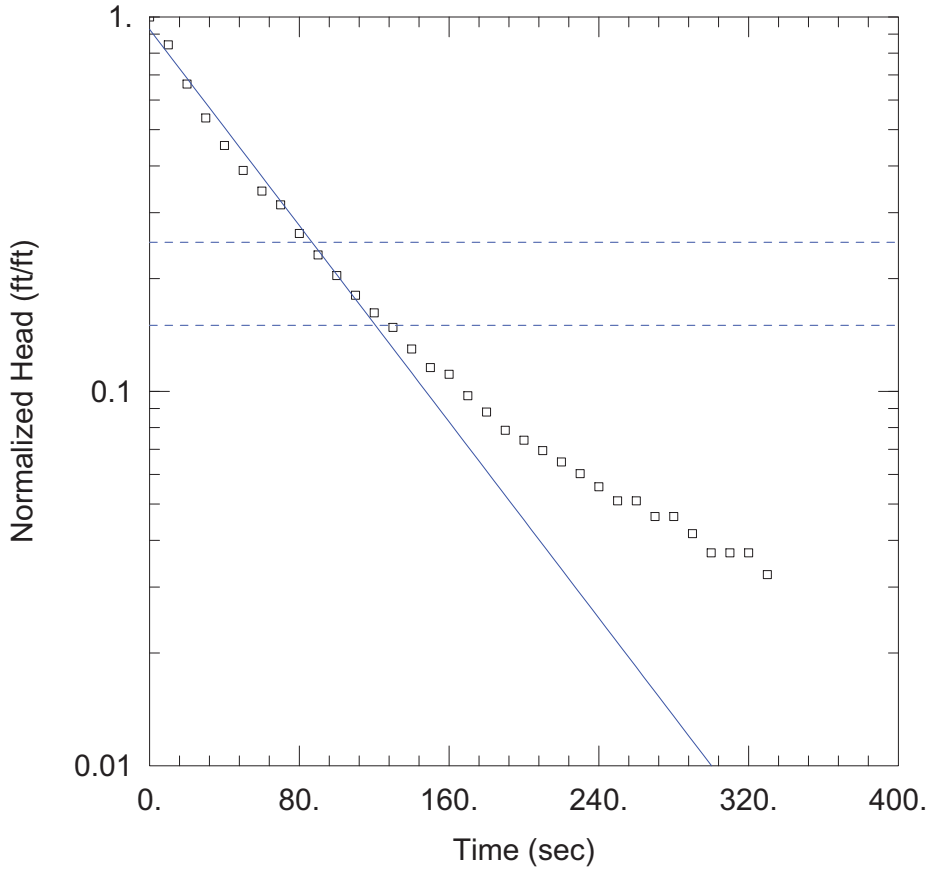

MW-67 (TEST2)

Data Set: J:\...\MW-67 T2B.aqt
Date: 08/22/07 Time: 10:56:49

PROJECT INFORMATION

Company: GZA GeoEnvironmental
Client: Indian Point Energy Center
Project: 41.0017869.10
Location: Buchanan, New York
Test Well: MW-67
Test Date: 8/9/07

AQUIFER DATA

Saturated Thickness: 300. ft Anisotropy Ratio (Kz/Kr): 0.1

WELL DATA (MW-67 Test 2)

Initial Displacement: 7.75 ft Static Water Column Height: 325.1 ft
Total Well Penetration Depth: 325.1 ft Screen Length: 30.15 ft
Casing Radius: 0.08333 ft Wellbore Radius: 0.159 ft

SOLUTION

Aquifer Model: Unconfined Solution Method: Hvorslev

K = 0.9602 ft/day y0 = 7.183 ft

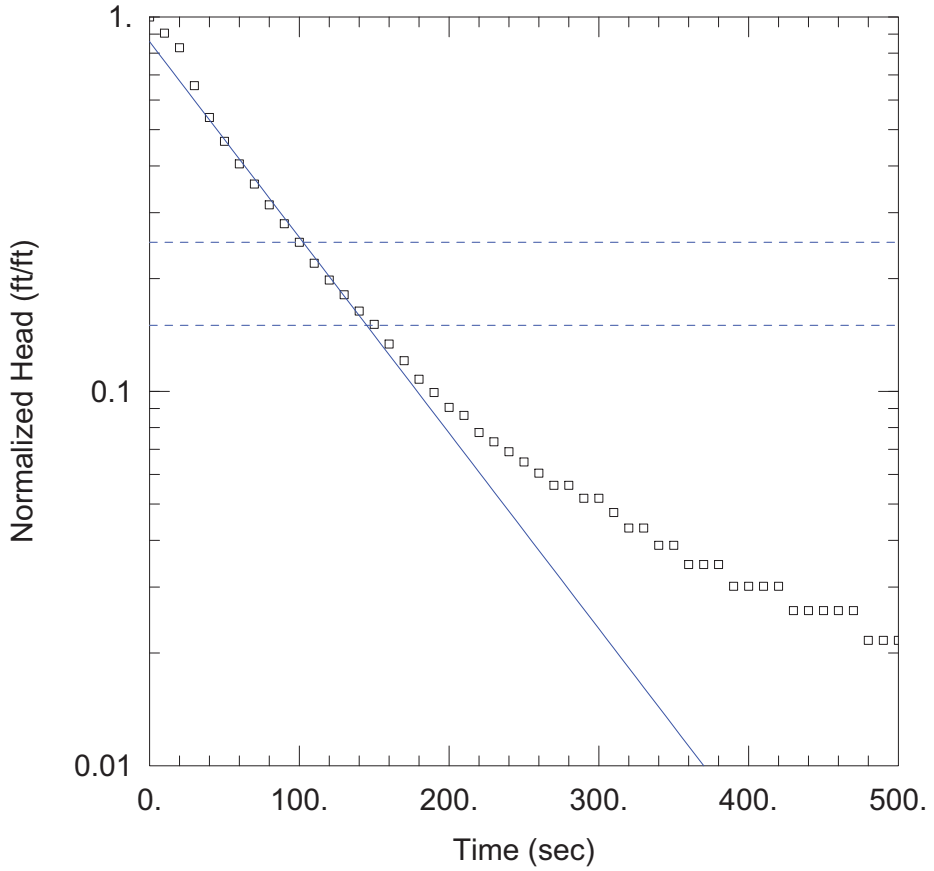

MW-67 (TEST2 EXTRACTION RECOVERY)

Data Set: J:\...\MW-67 T2B (R2).aqt
Date: 08/22/07 Time: 10:57:23

PROJECT INFORMATION

Company: GZA GeoEnvironmental
Client: Indian Point Energy Center
Project: 41.0017869.10
Location: Buchanan, New York
Test Well: MW-67
Test Date: 8/9/07

AQUIFER DATA

Saturated Thickness: 300. ft Anisotropy Ratio (Kz/Kr): 0.1

WELL DATA (MW-67 Test 2)

Initial Displacement: 8.324 ft Static Water Column Height: 325.1 ft
Total Well Penetration Depth: 325.1 ft Screen Length: 30.15 ft
Casing Radius: 0.08333 ft Wellbore Radius: 0.159 ft

SOLUTION

Aquifer Model: Unconfined Solution Method: Hvorslev

K = 0.7659 ft/day y0 = 7.151 ft

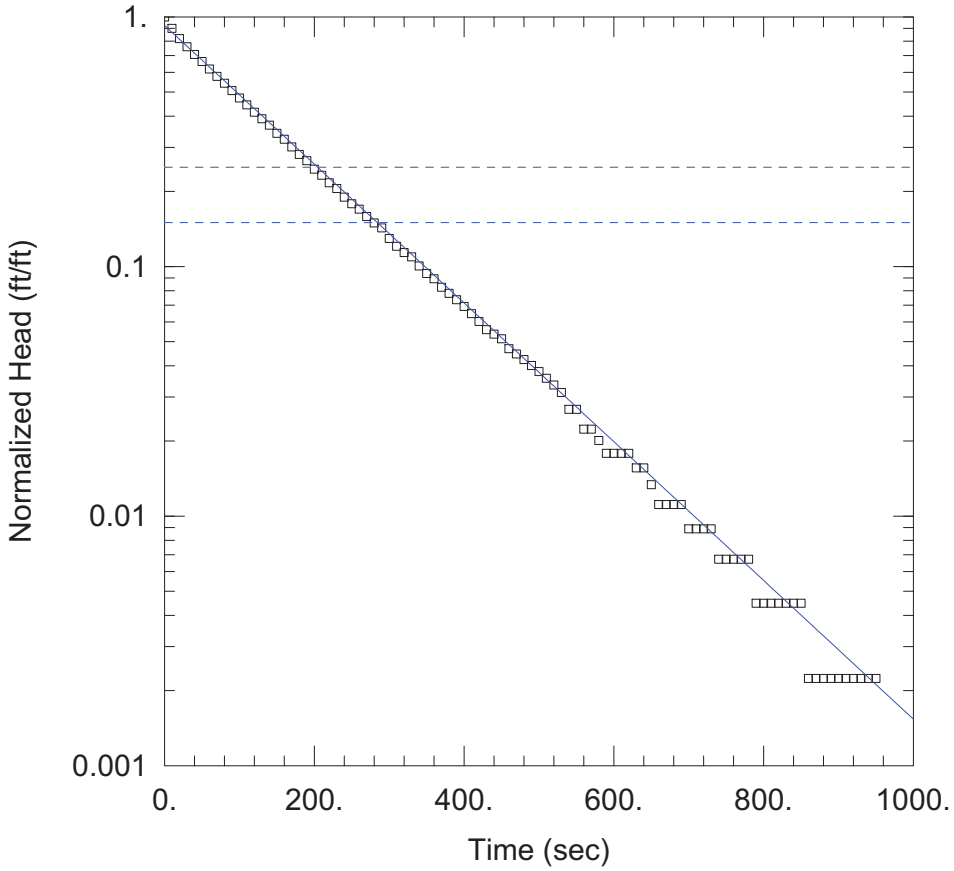

MW-67 (TEST3)

Data Set: J:\...\MW-67 T3.aqt
Date: 08/22/07 Time: 10:57:48

PROJECT INFORMATION

Company: GZA GeoEnvironmental
Client: Indian Point Energy Center
Project: 41.0017869.10
Location: Buchanan, New York
Test Well: MW-67
Test Date: 8/9/07

AQUIFER DATA

Saturated Thickness: 300. ft Anisotropy Ratio (Kz/Kr): 0.1

WELL DATA (MW-67 Test 3)

Initial Displacement: 16.09 ft Static Water Column Height: 316.8 ft
Total Well Penetration Depth: 336.6 ft Screen Length: 14.75 ft
Casing Radius: 0.08333 ft Wellbore Radius: 0.159 ft

SOLUTION

Aquifer Model: Unconfined Solution Method: Hvorslev

K = 0.7394 ft/day y0 = 14.87 ft

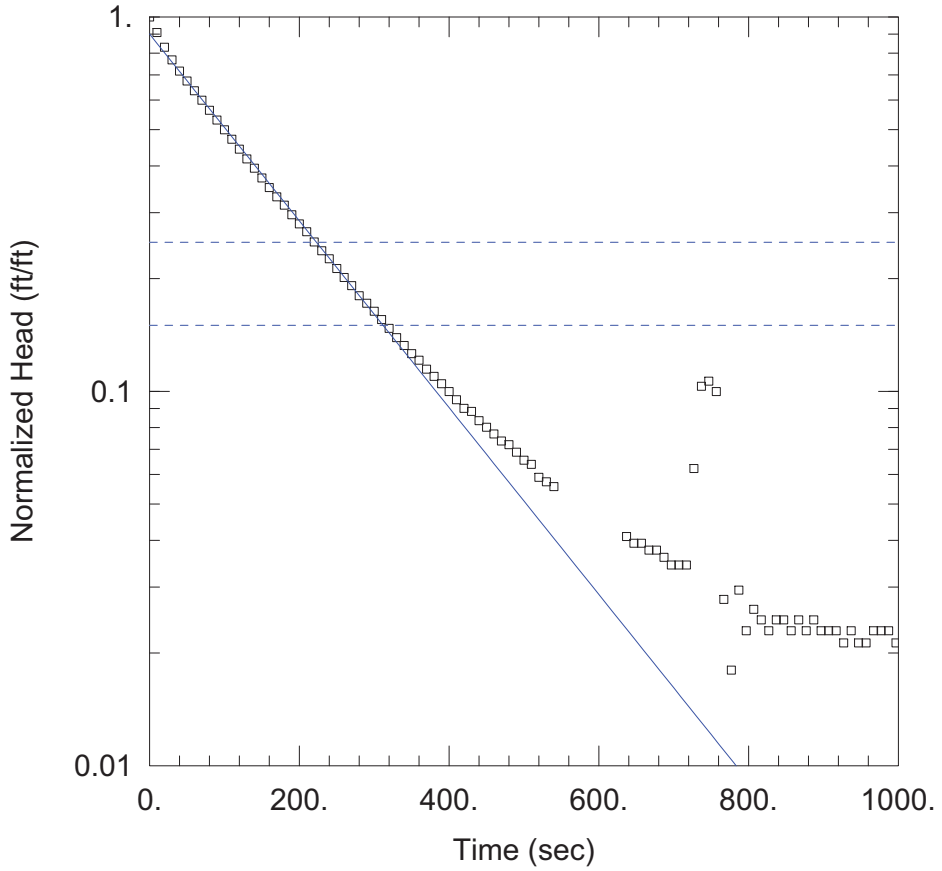

MW-67 (TEST3 EXTRACTION RECOVERY)

Data Set: J:\...\MW-67 T3 (R2).aqt
Date: 08/22/07 Time: 10:58:20

PROJECT INFORMATION

Company: GZA GeoEnvironmental
Client: Indian Point Energy Center
Project: 41.0017869.10
Location: Buchanan, New York
Test Well: MW-67
Test Date: 8/9/07

AQUIFER DATA

Saturated Thickness: 300. ft Anisotropy Ratio (Kz/Kr): 0.1

WELL DATA (MW-67 Test 3)

Initial Displacement: 21.94 ft Static Water Column Height: 316.8 ft
Total Well Penetration Depth: 316.8 ft Screen Length: 14.75 ft
Casing Radius: 0.08333 ft Wellbore Radius: 0.159 ft

SOLUTION

Aquifer Model: Unconfined Solution Method: Hvorslev

K = 0.6637 ft/day y0 = 19.75 ft

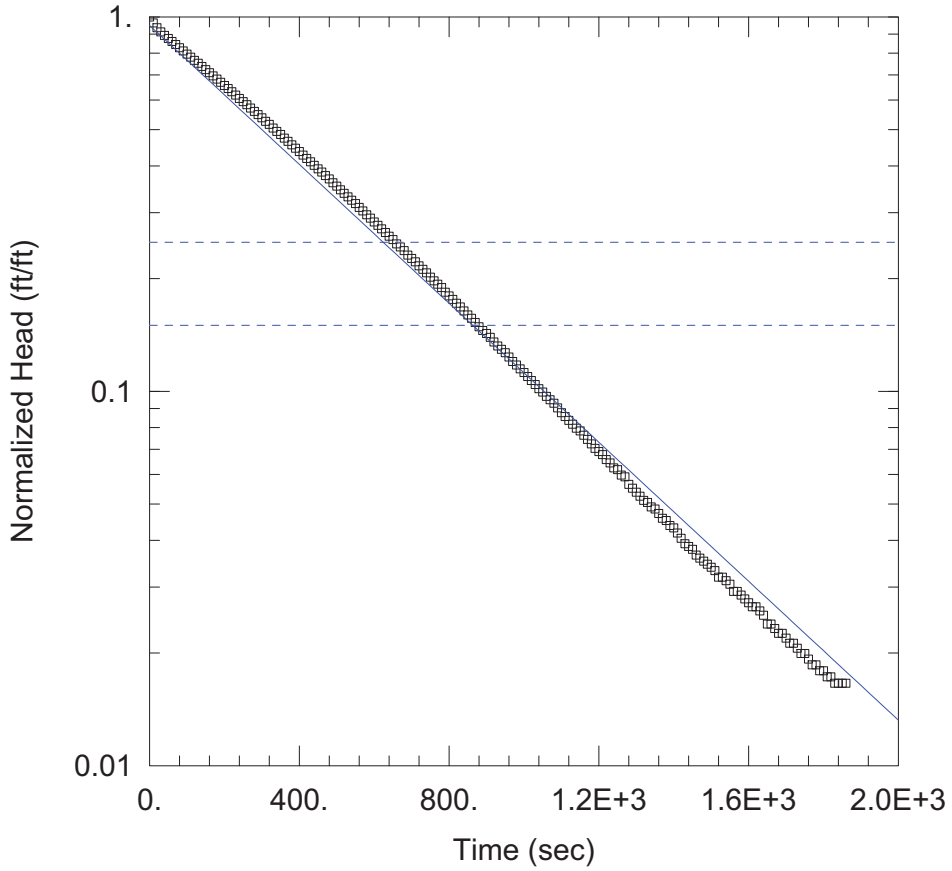

MW-67 (TEST4 EXTRACTION RECOVERY)

Data Set: J:\...\MW-67 T4.aqt
Date: 08/22/07 Time: 10:58:38

PROJECT INFORMATION

Company: GZA GeoEnvironmental
Client: Indian Point Energy Center
Project: 41.0017869.10
Location: Buchanan, New York
Test Well: MW-67
Test Date: 8/10/07

AQUIFER DATA

Saturated Thickness: 300. ft Anisotropy Ratio (Kz/Kr): 0.1

WELL DATA (MW-67 Test 4)

Initial Displacement: 54.08 ft Static Water Column Height: 311. ft
Total Well Penetration Depth: 311. ft Screen Length: 14.75 ft
Casing Radius: 0.08333 ft Wellbore Radius: 0.159 ft

SOLUTION

Aquifer Model: Unconfined Solution Method: Hvorslev

K = 0.2468 ft/day y0 = 51.32 ft

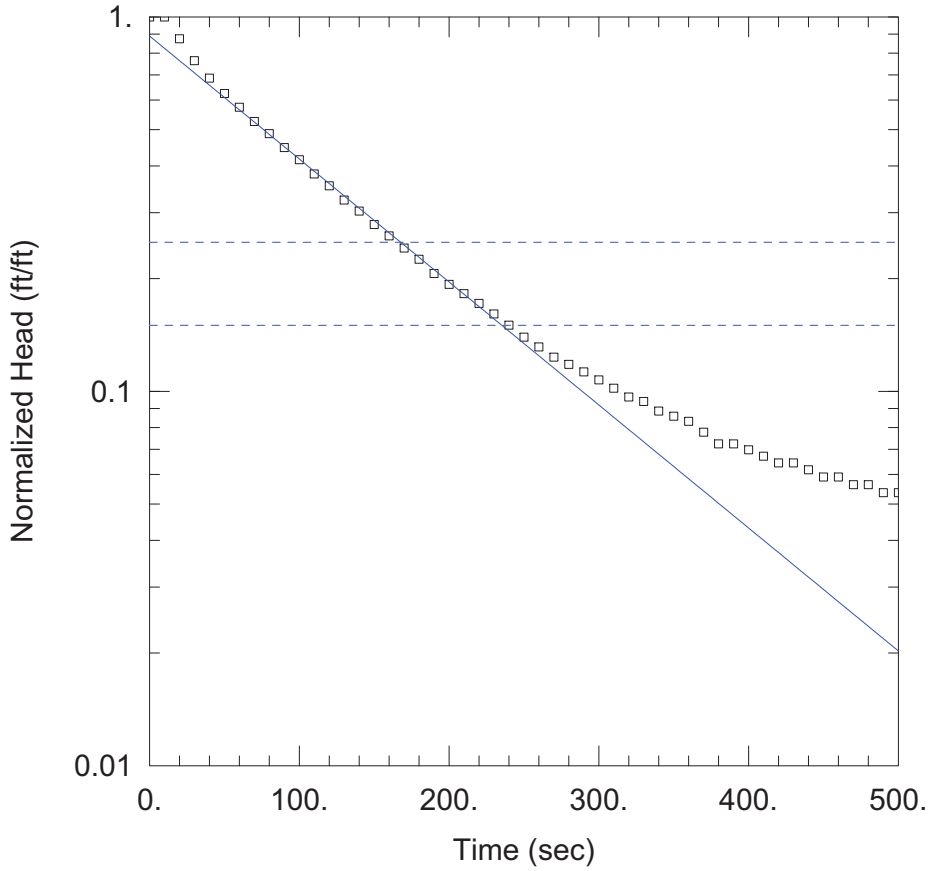

MW-67 (TEST5 EXTRACTION RECOVERY)

Data Set: J:\...\MW-67 T5.aqt
Date: 08/22/07 Time: 10:59:12

PROJECT INFORMATION

Company: GZA GeoEnvironmental
Client: Indian Point Energy Center
Project: 41.0017869.10
Location: Buchanan, New York
Test Well: MW-67
Test Date: 8/10/07

AQUIFER DATA

Saturated Thickness: 300. ft Anisotropy Ratio (Kz/Kr): 0.1

WELL DATA (MW-67 Test 5)

Initial Displacement: 13.39 ft Static Water Column Height: 298.6 ft
Total Well Penetration Depth: 298.6 ft Screen Length: 14.75 ft
Casing Radius: 0.08333 ft Wellbore Radius: 0.159 ft

SOLUTION

Aquifer Model: Unconfined Solution Method: Hvorslev

K = 0.874 ft/day y0 = 11.9 ft

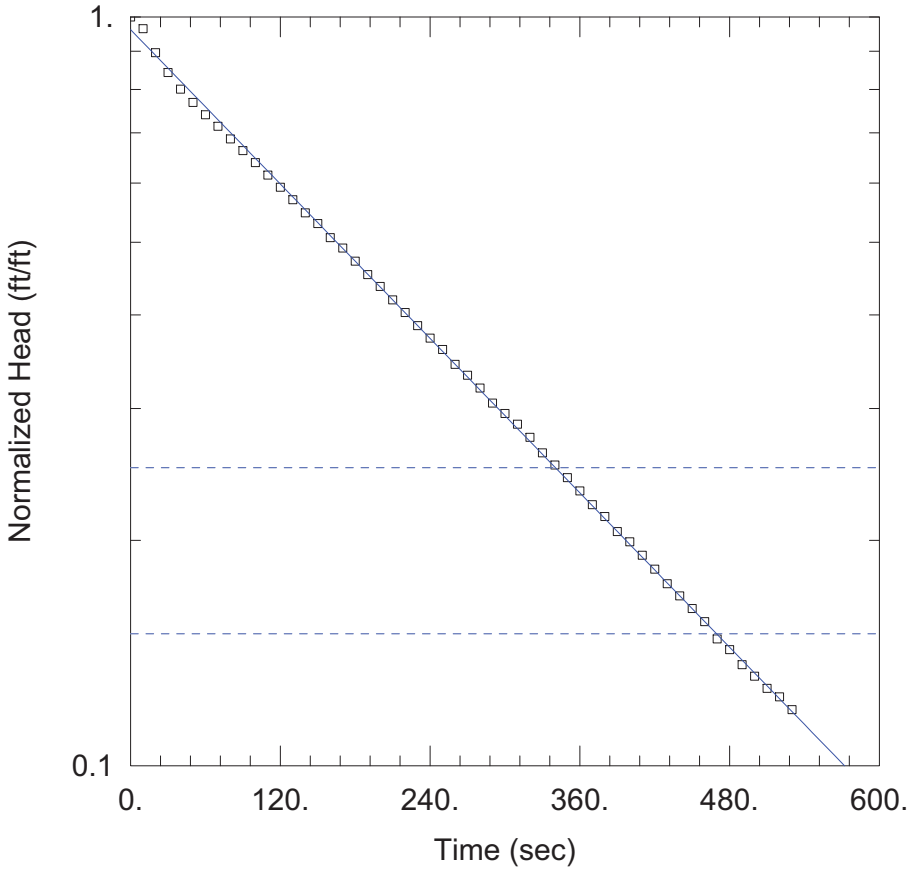

MW-67 (TEST6)

Data Set: J:\...\MW-67 T6.aqt
Date: 08/22/07 Time: 10:59:36

PROJECT INFORMATION

Company: GZA GeoEnvironmental
Client: Indian Point Energy Center
Project: 41.0017869.10
Location: Buchanan, New York
Test Well: MW-67
Test Date: 8/14/07

AQUIFER DATA

Saturated Thickness: 300. ft Anisotropy Ratio (Kz/Kr): 0.1

WELL DATA (MW-67 Test 6)

Initial Displacement: 22.35 ft Static Water Column Height: 287.4 ft
Total Well Penetration Depth: 287.4 ft Screen Length: 14.75 ft
Casing Radius: 0.08333 ft Wellbore Radius: 0.159 ft

SOLUTION

Aquifer Model: Unconfined Solution Method: Hvorslev

K = 0.4572 ft/day y0 = 21.5 ft

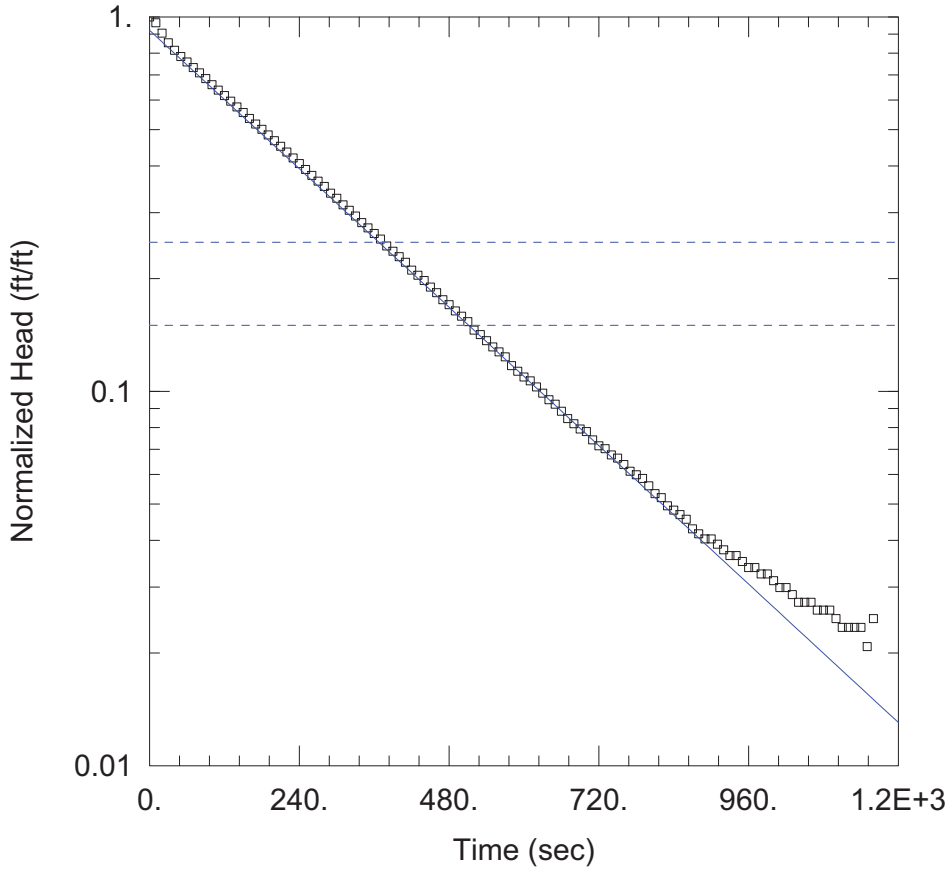

MW-67 (TEST6 EXTRACTION RECOVERY)

Data Set: J:\...\MW-67 T6 (R2).aqt
Date: 08/22/07 Time: 11:00:05

PROJECT INFORMATION

Company: GZA GeoEnvironmental
Client: Indian Point Energy Center
Project: 41.0017869.10
Location: Buchanan, New York
Test Well: MW-67
Test Date: 8/14/07

AQUIFER DATA

Saturated Thickness: 300. ft Anisotropy Ratio (Kz/Kr): 0.1

WELL DATA (MW-67 Test 6)

Initial Displacement: 27.59 ft Static Water Column Height: 287.4 ft
Total Well Penetration Depth: 287.4 ft Screen Length: 14.75 ft
Casing Radius: 0.08333 ft Wellbore Radius: 0.159 ft

SOLUTION

Aquifer Model: Unconfined Solution Method: Hvorslev

K = 0.4099 ft/day y0 = 25.41 ft

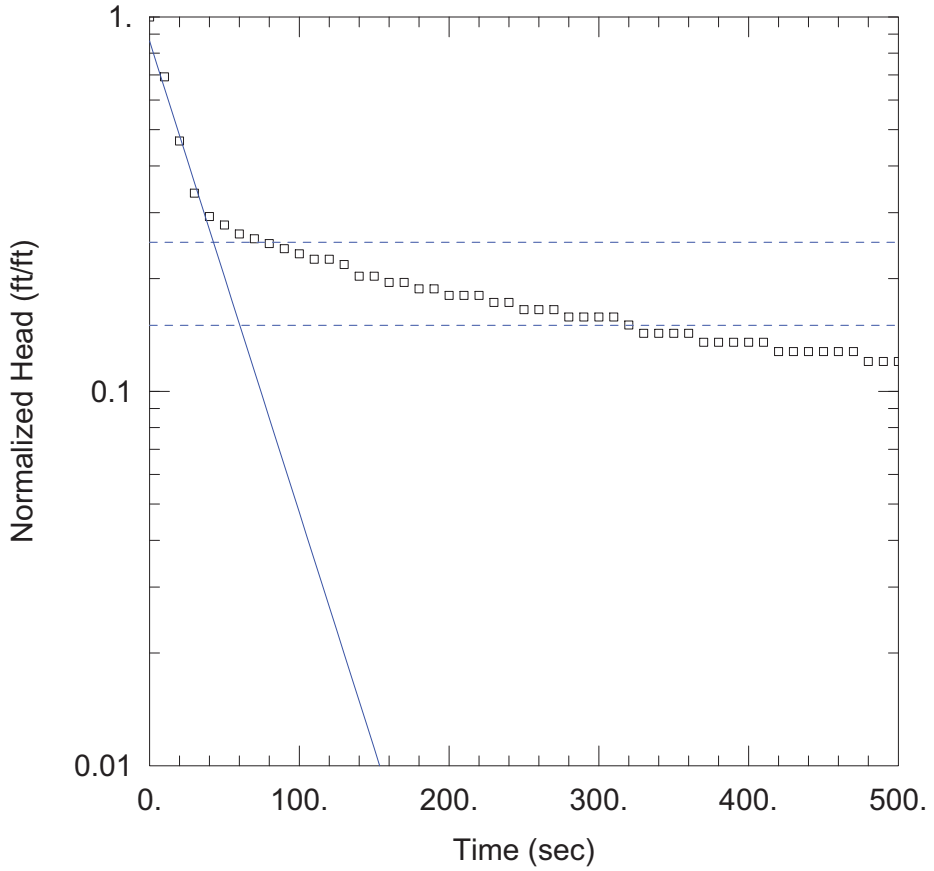

MW-67 (TEST8 EXTRACTION RECOVERY)

Data Set: J:\...\MW-67 T8.aqt
Date: 08/22/07 Time: 11:00:49

PROJECT INFORMATION

Company: GZA GeoEnvironmental
Client: Indian Point Energy Center
Project: 41.0017869.10
Location: Buchanan, New York
Test Well: MW-67
Test Date: 8/15/07

AQUIFER DATA

Saturated Thickness: 300. ft Anisotropy Ratio (Kz/Kr): 0.1

WELL DATA (MW-67 Test 8)

Initial Displacement: 4.769 ft Static Water Column Height: 260.8 ft
Total Well Penetration Depth: 260.8 ft Screen Length: 14.75 ft
Casing Radius: 0.08333 ft Wellbore Radius: 0.159 ft

SOLUTION

Aquifer Model: Unconfined Solution Method: Hvorslev

K = 3.35 ft/day y0 = 4.111 ft

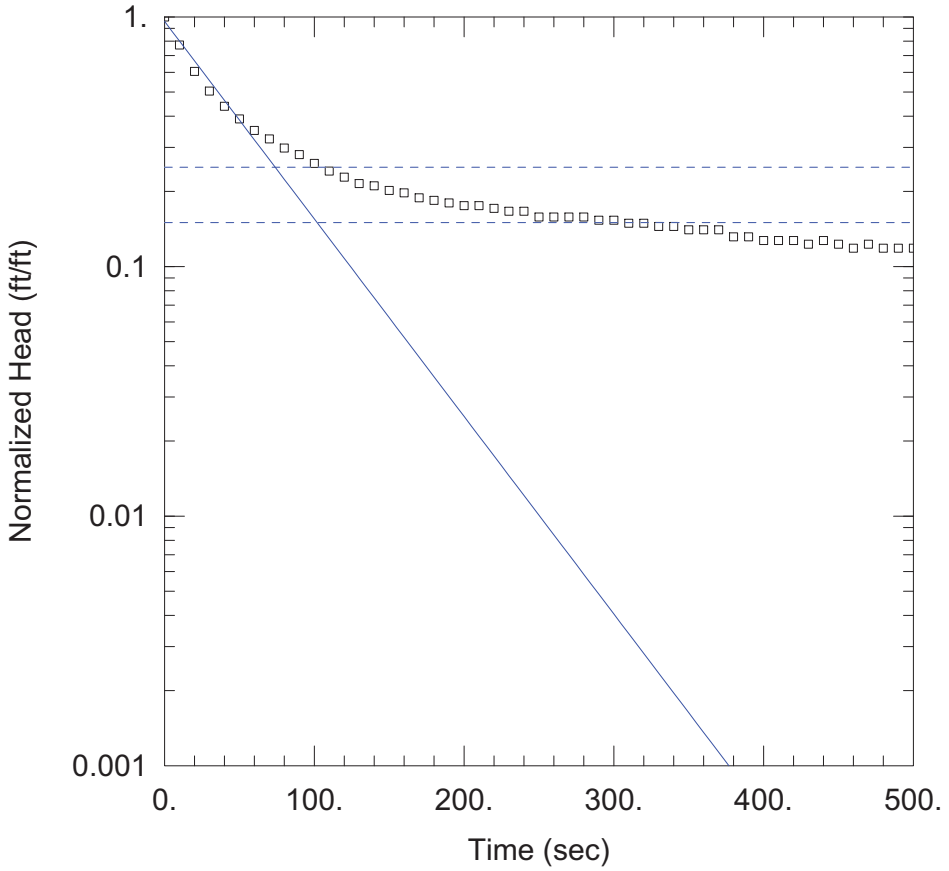

MW-67 (TEST9 EXTRACTION RECOVERY)

Data Set: J:\...\MW-67 T9.aqt
Date: 08/22/07 Time: 11:01:27

PROJECT INFORMATION

Company: GZA GeoEnvironmental
Client: Indian Point Energy Center
Project: 41.0017869.10
Location: Buchanan, New York
Test Well: MW-67
Test Date: 8/16/07

AQUIFER DATA

Saturated Thickness: 300. ft Anisotropy Ratio (Kz/Kr): 0.1

WELL DATA (MW-67 Test 9)

Initial Displacement: 8.174 ft Static Water Column Height: 250.8 ft
Total Well Penetration Depth: 250.8 ft Screen Length: 14.75 ft
Casing Radius: 0.08333 ft Wellbore Radius: 0.159 ft

SOLUTION

Aquifer Model: Unconfined Solution Method: Hvorslev

K = 2.106 ft/day y0 = 7.85 ft

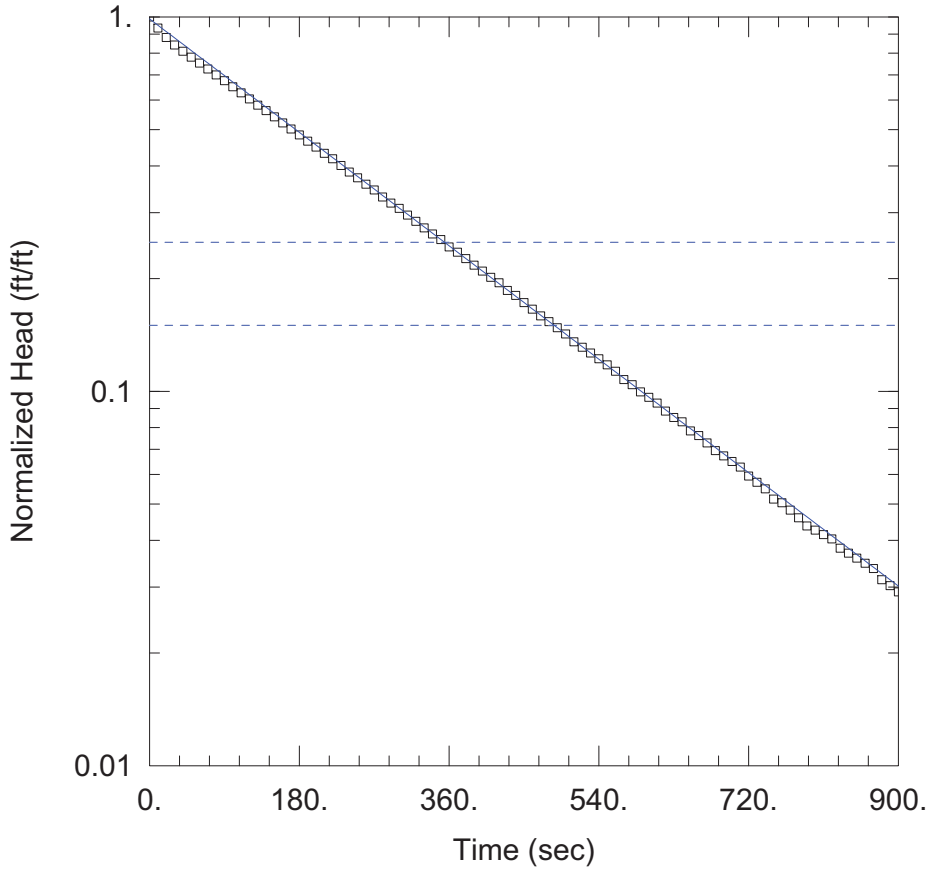

MW-67 (TEST10)

Data Set: J:\...\MW-67 T10.aqt
Date: 08/22/07 Time: 11:01:48

PROJECT INFORMATION

Company: GZA GeoEnvironmental
Client: Indian Point Energy Center
Project: 41.0017869.10
Location: Buchanan, New York
Test Well: MW-67
Test Date: 8/16/07

AQUIFER DATA

Saturated Thickness: 300. ft Anisotropy Ratio (Kz/Kr): 0.1

WELL DATA (MW-67 Test10)

Initial Displacement: 32. ft Static Water Column Height: 236. ft
Total Well Penetration Depth: 236. ft Screen Length: 14.75 ft
Casing Radius: 0.08333 ft Wellbore Radius: 0.159 ft

SOLUTION

Aquifer Model: Unconfined Solution Method: Hvorslev

K = 0.4478 ft/day y0 = 31.61 ft

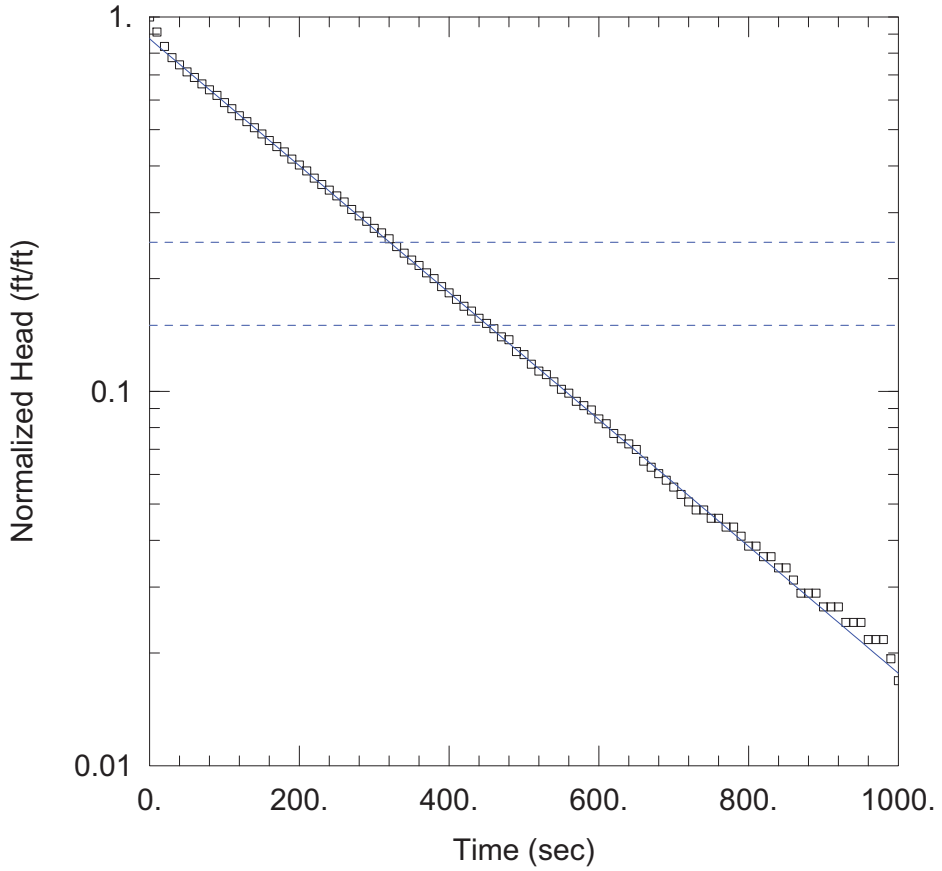

MW-67 (TEST10 EXTRACTION RECOVERY)

Data Set: J:\...\MW-67 T10 (R2).aqt
Date: 08/22/07 Time: 11:02:10

PROJECT INFORMATION

Company: GZA GeoEnvironmental
Client: Indian Point Energy Center
Project: 41.0017869.10
Location: Buchanan, New York
Test Well: MW-67
Test Date: 8/16/07

AQUIFER DATA

Saturated Thickness: 300. ft Anisotropy Ratio (Kz/Kr): 0.1

WELL DATA (MW-67 Test10)

Initial Displacement: 14.87 ft Static Water Column Height: 236. ft
Total Well Penetration Depth: 236. ft Screen Length: 14.75 ft
Casing Radius: 0.08333 ft Wellbore Radius: 0.159 ft

SOLUTION

Aquifer Model: Unconfined Solution Method: Hvorslev

K = 0.4509 ft/day y0 = 13. ft

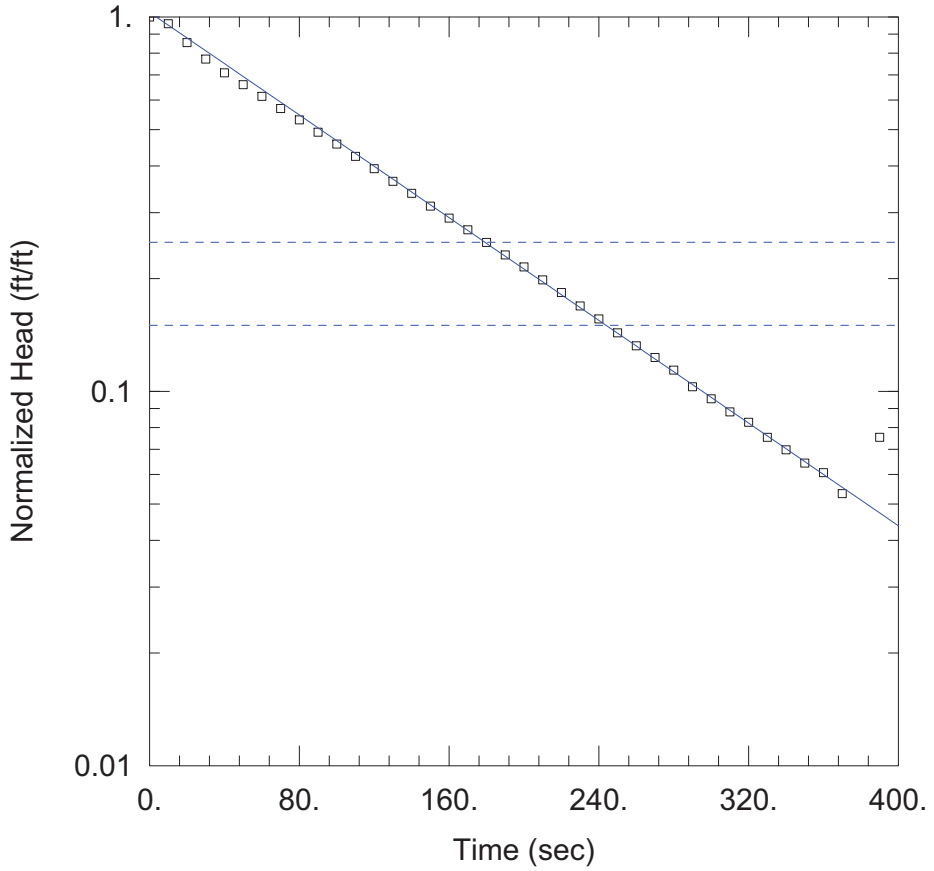

MW-67 (TEST11)

Data Set: J:\...\MW-67 T11.aqt
Date: 08/23/07 Time: 12:17:17

PROJECT INFORMATION

Company: GZA GeoEnvironmental
Client: Indian Point Energy Center
Project: 41.0017869.10
Location: Buchanan, New York
Test Well: MW-67
Test Date: 8/17/07

AQUIFER DATA

Saturated Thickness: 300. ft Anisotropy Ratio (Kz/Kr): 0.1

WELL DATA (MW-67 Test11)

Initial Displacement: 19.5 ft Static Water Column Height: 218.1 ft
Total Well Penetration Depth: 218.1 ft Screen Length: 14.75 ft
Casing Radius: 0.08333 ft Wellbore Radius: 0.159 ft

SOLUTION

Aquifer Model: Unconfined Solution Method: Hvorslev

K = 0.9122 ft/day y0 = 20.07 ft

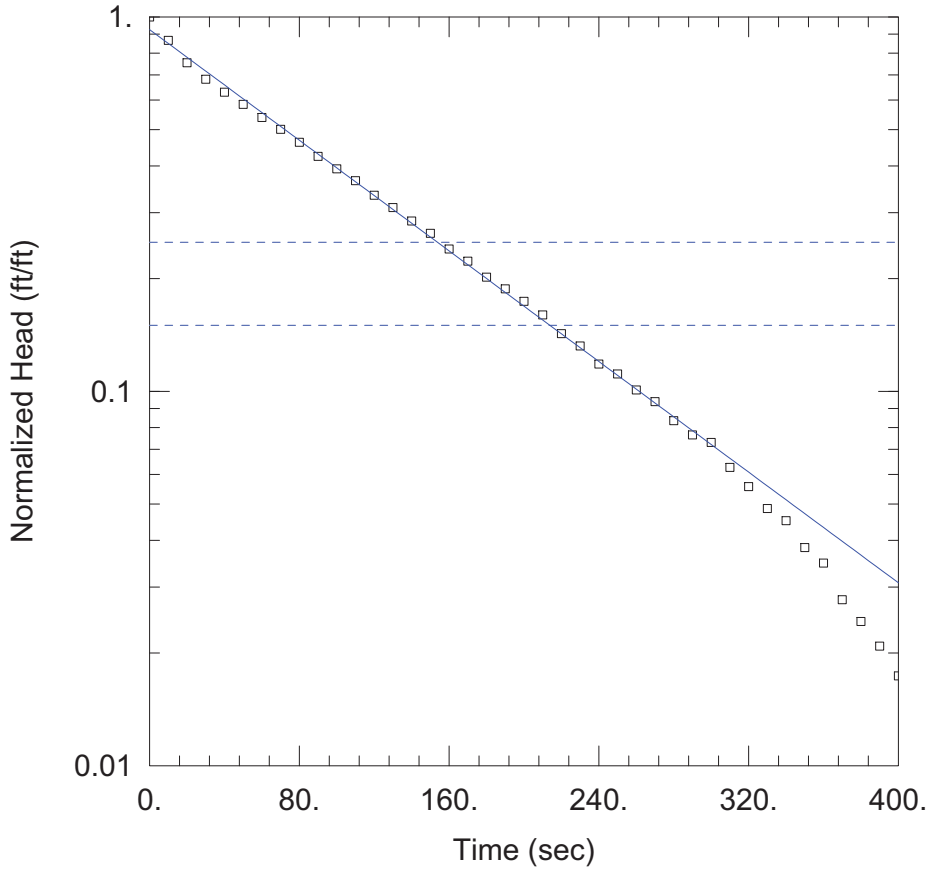

MW-67 (TEST11 EXTRACTION RECOVERY)

Data Set: J:\...\MW-67 T11(R2).aqt
Date: 08/23/07 Time: 12:18:27

PROJECT INFORMATION

Company: GZA GeoEnvironmental
Client: Indian Point Energy Center
Project: 41.0017869.10
Location: Buchanan, New York
Test Well: MW-67
Test Date: 8/17/07

AQUIFER DATA

Saturated Thickness: 300. ft Anisotropy Ratio (Kz/Kr): 0.1

WELL DATA (MW-67 Test11)

Initial Displacement: 10.3 ft Static Water Column Height: 218.1 ft
Total Well Penetration Depth: 218.1 ft Screen Length: 14.75 ft
Casing Radius: 0.08333 ft Wellbore Radius: 0.159 ft

SOLUTION

Aquifer Model: Unconfined Solution Method: Hvorslev

K = 0.9827 ft/day y0 = 9.528 ft

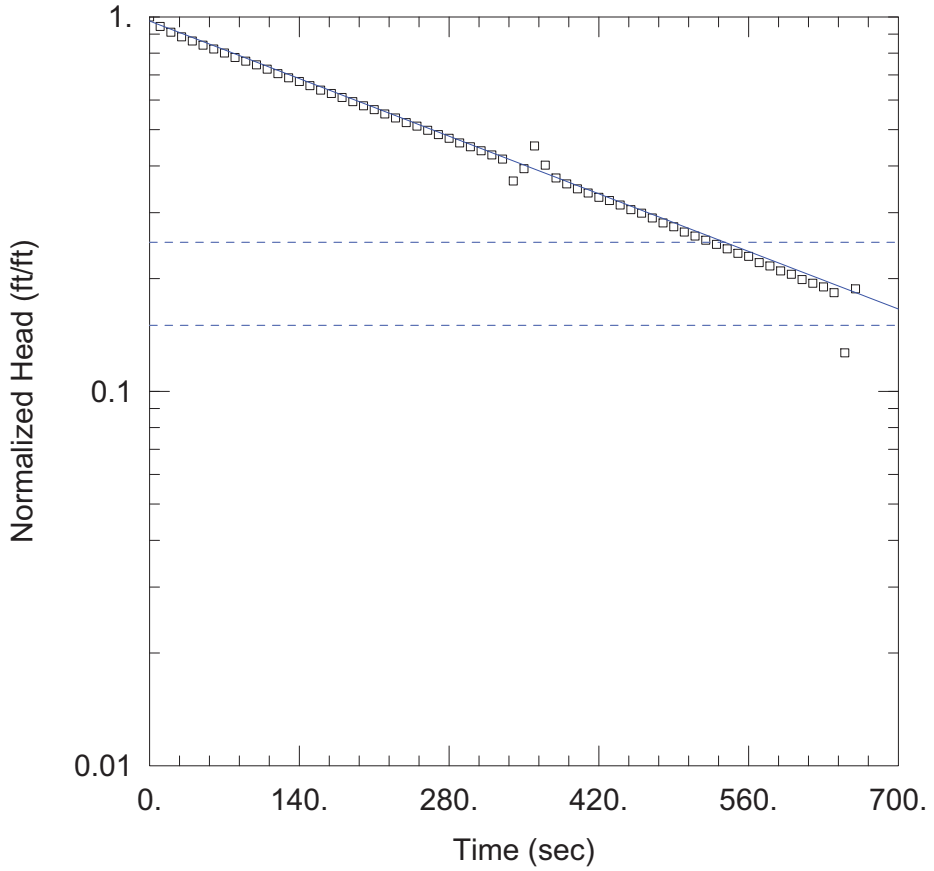

MW-67 (TEST12)

Data Set: J:\...\MW-67 T12.aqt
Date: 08/23/07 Time: 12:18:39

PROJECT INFORMATION

Company: GZA GeoEnvironmental
Client: Indian Point Energy Center
Project: 41.0017869.10
Location: Buchanan, New York
Test Well: MW-67
Test Date: 8/20/07

AQUIFER DATA

Saturated Thickness: 300. ft Anisotropy Ratio (Kz/Kr): 0.1

WELL DATA (MW-67 Test12)

Initial Displacement: 16.4 ft Static Water Column Height: 202.4 ft
Total Well Penetration Depth: 202.4 ft Screen Length: 14.75 ft
Casing Radius: 0.08333 ft Wellbore Radius: 0.159 ft

SOLUTION

Aquifer Model: Unconfined Solution Method: Hvorslev

K = 0.2924 ft/day y0 = 16. ft

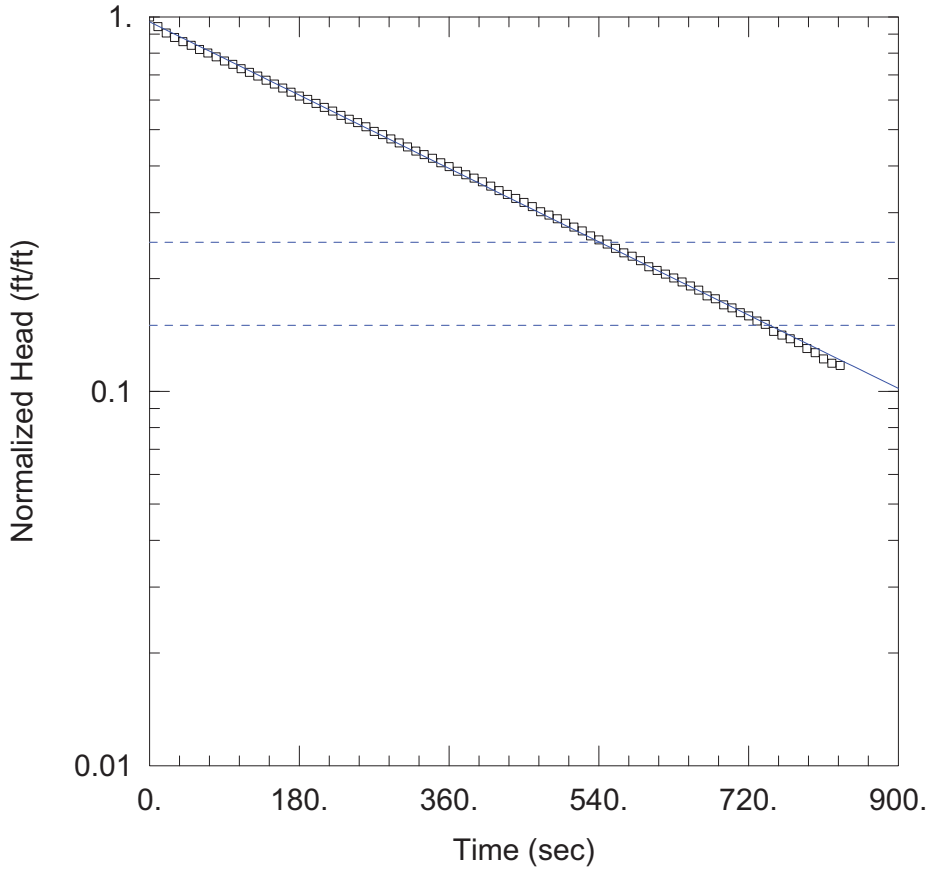

MW-67 (TEST12 EXTRACTION RECOVERY)

Data Set: J:\...\MW-67 T12(R2).aqt
Date: 08/23/07 Time: 12:18:52

PROJECT INFORMATION

Company: GZA GeoEnvironmental
Client: Indian Point Energy Center
Project: 41.0017869.10
Location: Buchanan, New York
Test Well: MW-67
Test Date: 8/20/07

AQUIFER DATA

Saturated Thickness: 300. ft Anisotropy Ratio (Kz/Kr): 0.1

WELL DATA (MW-67 Test12)

Initial Displacement: 22.3 ft Static Water Column Height: 202.4 ft
Total Well Penetration Depth: 202.4 ft Screen Length: 14.75 ft
Casing Radius: 0.08333 ft Wellbore Radius: 0.159 ft

SOLUTION

Aquifer Model: Unconfined Solution Method: Hvorslev

K = 0.2894 ft/day y0 = 21.64 ft

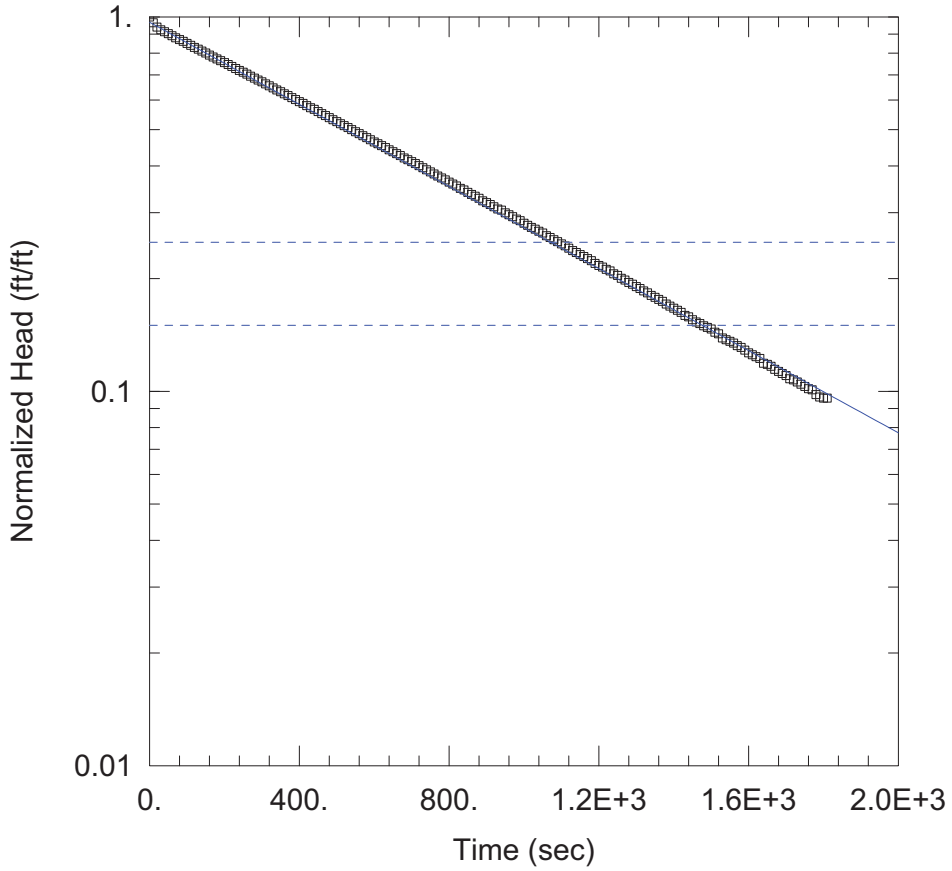

MW-67 (TEST13 EXTRACTION RECOVERY)

Data Set: J:\...\MW-67 T13 (R2).aqt
Date: 08/23/07 Time: 12:19:15

PROJECT INFORMATION

Company: GZA GeoEnvironmental
Client: Indian Point Energy Center
Project: 41.0017869.10
Location: Buchanan, New York
Test Well: MW-67
Test Date: 8/20/07

AQUIFER DATA

Saturated Thickness: 300. ft Anisotropy Ratio (Kz/Kr): 0.1

WELL DATA (MW-67 Test13)

Initial Displacement: 50. ft Static Water Column Height: 171.3 ft
Total Well Penetration Depth: 171.3 ft Screen Length: 14.75 ft
Casing Radius: 0.08333 ft Wellbore Radius: 0.159 ft

SOLUTION

Aquifer Model: Unconfined Solution Method: Hvorslev

K = 0.1459 ft/day y0 = 48.39 ft

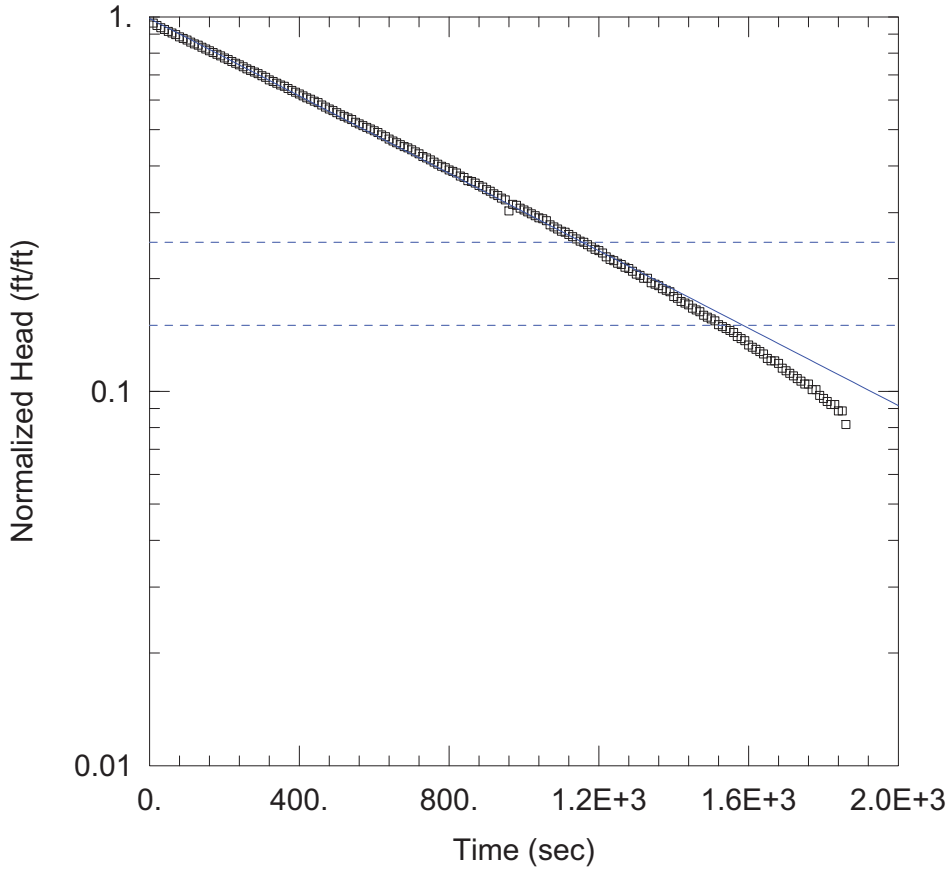

MW-67 (TEST14)

Data Set: J:\...\MW-67 T14.aqt
Date: 08/23/07 Time: 12:19:26

PROJECT INFORMATION

Company: GZA GeoEnvironmental
Client: Indian Point Energy Center
Project: 41.0017869.10
Location: Buchanan, New York
Test Well: MW-67
Test Date: 8/20/07

AQUIFER DATA

Saturated Thickness: 300. ft Anisotropy Ratio (Kz/Kr): 0.1

WELL DATA (MW-67 Test14)

Initial Displacement: 20.17 ft Static Water Column Height: 155.2 ft
Total Well Penetration Depth: 155.2 ft Screen Length: 14.75 ft
Casing Radius: 0.08333 ft Wellbore Radius: 0.159 ft

SOLUTION

Aquifer Model: Unconfined Solution Method: Hvorslev

K = 0.1375 ft/day y0 = 19.98 ft

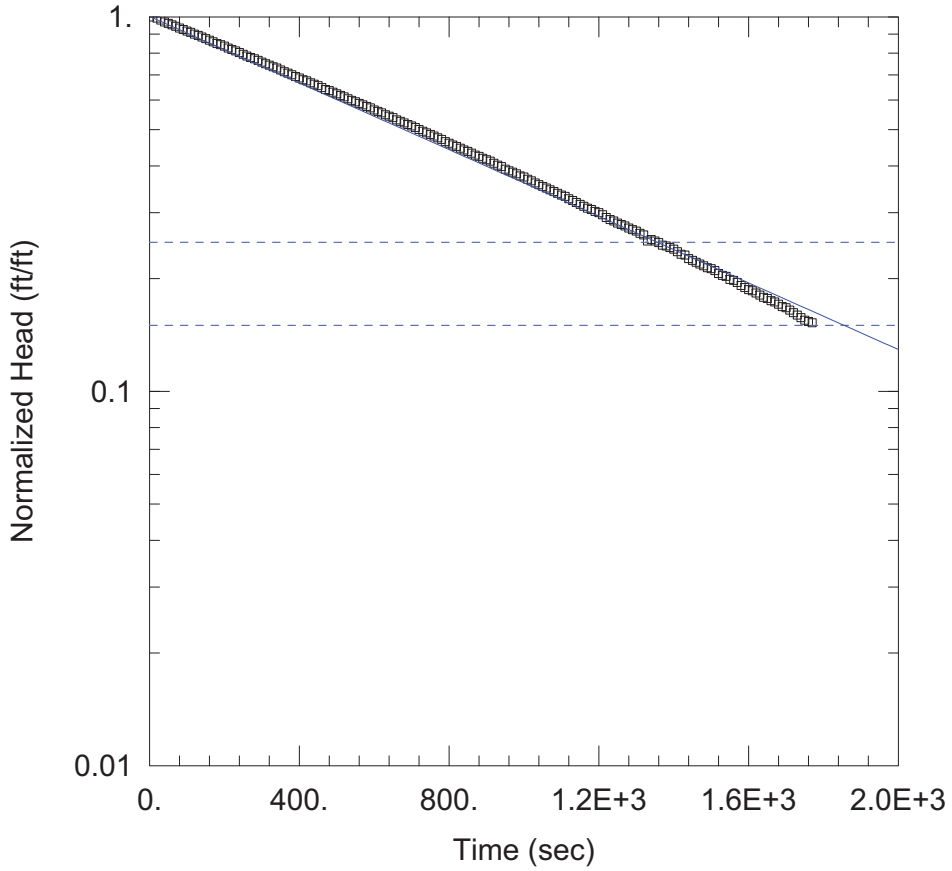

MW-67 (TEST14 EXTRACTION RECOVERY)

Data Set: J:\...\MW-67 T14 (R2).aqt
Date: 08/23/07 Time: 12:19:35

PROJECT INFORMATION

Company: GZA GeoEnvironmental
Client: Indian Point Energy Center
Project: 41.0017869.10
Location: Buchanan, New York
Test Well: MW-67
Test Date: 8/20/07

AQUIFER DATA

Saturated Thickness: 300. ft Anisotropy Ratio (Kz/Kr): 0.1

WELL DATA (MW-67 Test14)

Initial Displacement: 29.1 ft Static Water Column Height: 155.2 ft
Total Well Penetration Depth: 155.2 ft Screen Length: 14.75 ft
Casing Radius: 0.08333 ft Wellbore Radius: 0.159 ft

SOLUTION

Aquifer Model: Unconfined Solution Method: Hvorslev

K = 0.1184 ft/day y0 = 29.2 ft

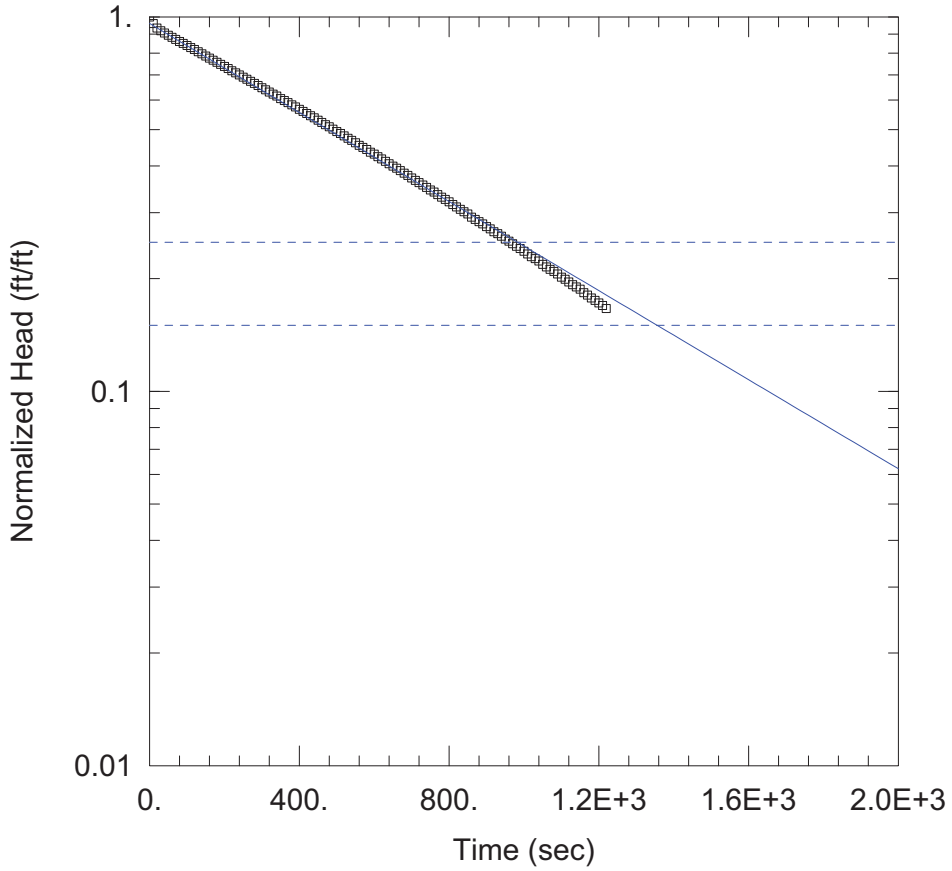

MW-67 (TEST15)

Data Set: J:\...\MW-67 T15.aqt
Date: 08/23/07 Time: 12:19:46

PROJECT INFORMATION

Company: GZA GeoEnvironmental
Client: Indian Point Energy Center
Project: 41.0017869.10
Location: Buchanan, New York
Test Well: MW-67
Test Date: 8/20/07

AQUIFER DATA

Saturated Thickness: 300. ft Anisotropy Ratio (Kz/Kr): 0.1

WELL DATA (MW-67 Test15)

Initial Displacement: 54.38 ft Static Water Column Height: 135.1 ft
Total Well Penetration Depth: 135.1 ft Screen Length: 14.75 ft
Casing Radius: 0.08333 ft Wellbore Radius: 0.159 ft

SOLUTION

Aquifer Model: Unconfined Solution Method: Hvorslev

K = 0.1582 ft/day y0 = 52.25 ft

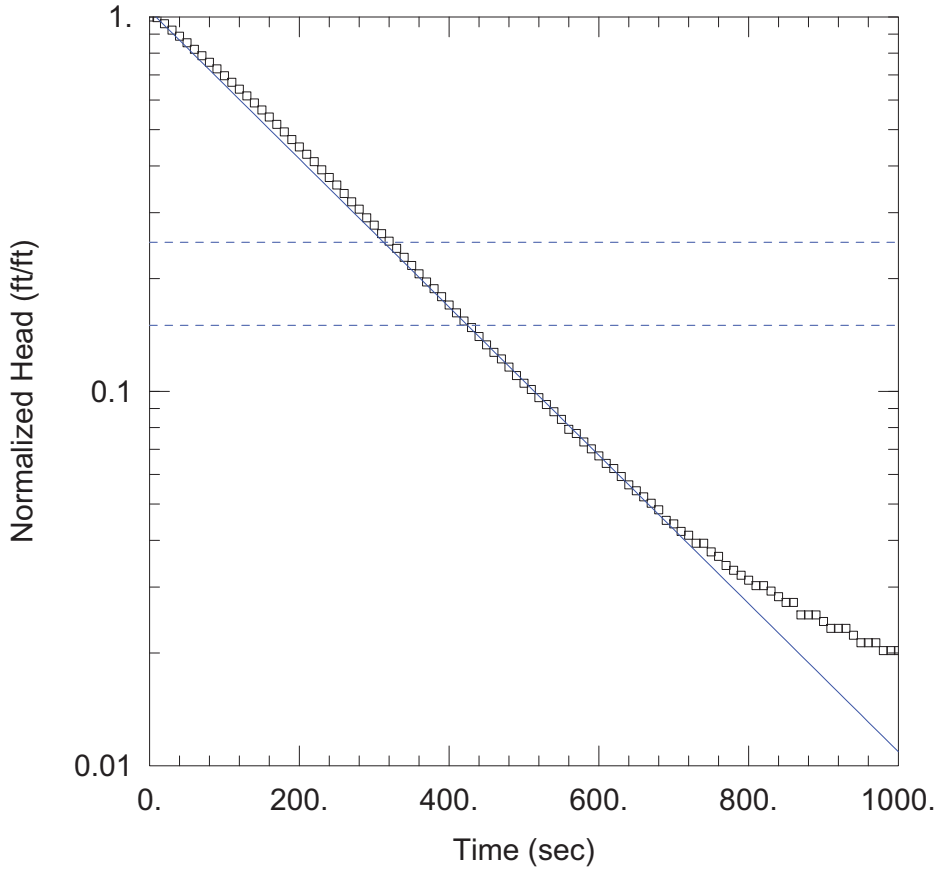

MW-67 (TEST15 EXTRACTION RECOVERY)

Data Set: J:\...\MW-67 T15(R2).aqt
Date: 08/23/07 Time: 12:19:59

PROJECT INFORMATION

Company: GZA GeoEnvironmental
Client: Indian Point Energy Center
Project: 41.0017869.10
Location: Buchanan, New York
Test Well: MW-67
Test Date: 8/20/07

AQUIFER DATA

Saturated Thickness: 300. ft Anisotropy Ratio (Kz/Kr): 0.1

WELL DATA (MW-67 Test15)

Initial Displacement: 35.83 ft Static Water Column Height: 135.1 ft
Total Well Penetration Depth: 135.1 ft Screen Length: 14.75 ft
Casing Radius: 0.08333 ft Wellbore Radius: 0.159 ft

SOLUTION

Aquifer Model: Unconfined Solution Method: Hvorslev

K = 0.5267 ft/day y0 = 37.26 ft

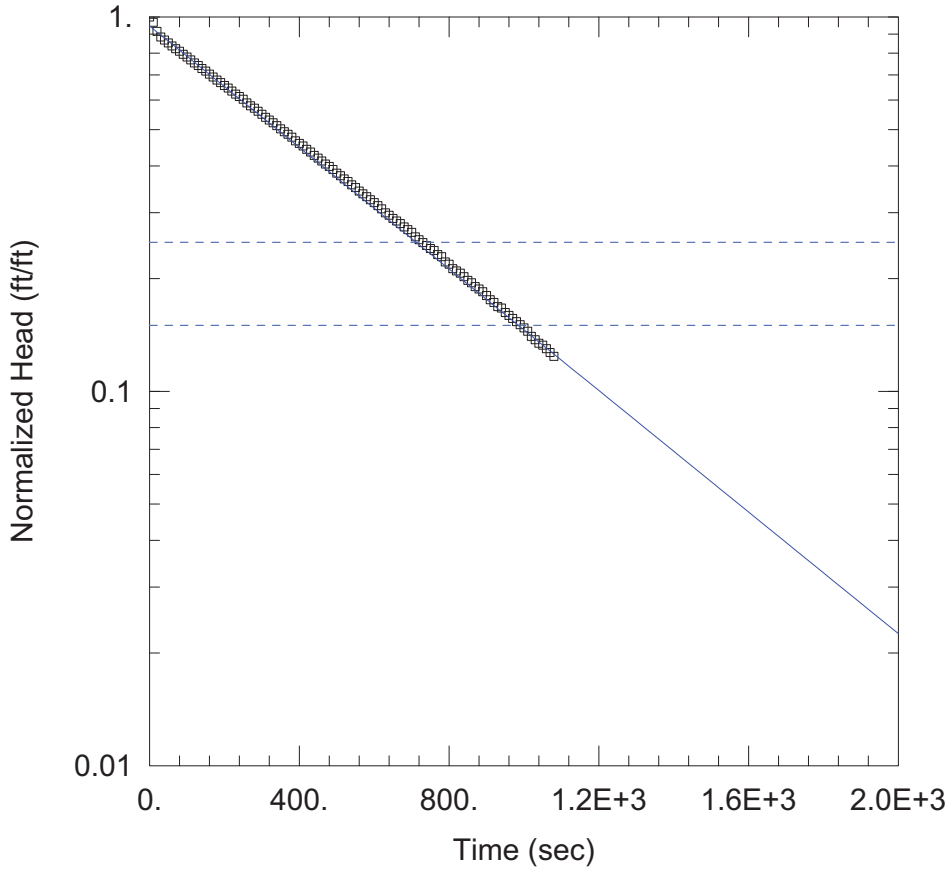

MW-67 (TEST16)

Data Set: J:\...\MW-67 T16.aqt
Date: 08/23/07 Time: 12:20:09

PROJECT INFORMATION

Company: GZA GeoEnvironmental
Client: Indian Point Energy Center
Project: 41.0017869.10
Location: Buchanan, New York
Test Well: MW-67
Test Date: 8/21/07

AQUIFER DATA

Saturated Thickness: 300. ft Anisotropy Ratio (Kz/Kr): 0.1

WELL DATA (MW-67 Test16)

Initial Displacement: 24.19 ft Static Water Column Height: 129.5 ft
Total Well Penetration Depth: 129.5 ft Screen Length: 14.75 ft
Casing Radius: 0.08333 ft Wellbore Radius: 0.159 ft

SOLUTION

Aquifer Model: Unconfined Solution Method: Hvorslev

K = 0.2159 ft/day y0 = 22.89 ft

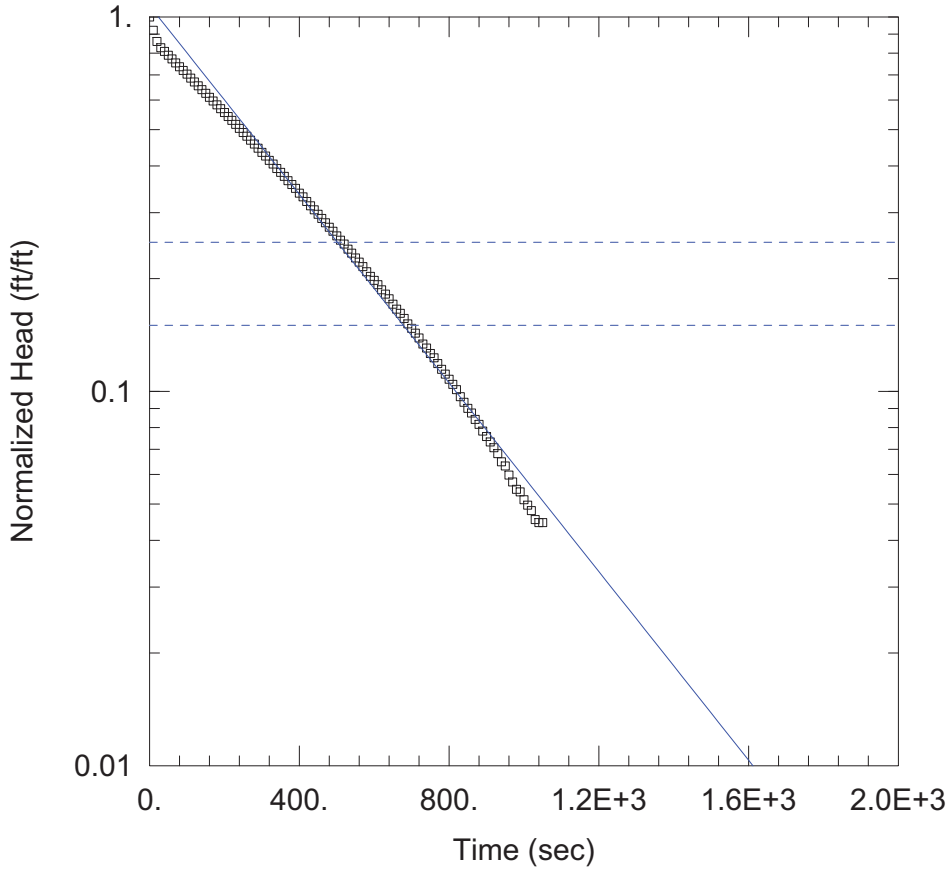

MW-67 (TEST16 EXTRACTION RECOVERY)

Data Set: J:\...\MW-67 T16.aqt
Date: 08/24/07 Time: 17:06:06

PROJECT INFORMATION

Company: GZA GeoEnvironmental
Client: Indian Point Energy Center
Project: 41.0017869.10
Location: Buchanan, New York
Test Well: MW-67
Test Date: 8/24/07

AQUIFER DATA

Saturated Thickness: 300. ft Anisotropy Ratio (Kz/Kr): 0.1

WELL DATA (MW-67 Test16)

Initial Displacement: 17.1 ft Static Water Column Height: 129.5 ft
Total Well Penetration Depth: 129.5 ft Screen Length: 14.75 ft
Casing Radius: 0.08333 ft Wellbore Radius: 0.159 ft

SOLUTION

Aquifer Model: Unconfined Solution Method: Hvorslev

K = 0.3351 ft/day y0 = 18.33 ft

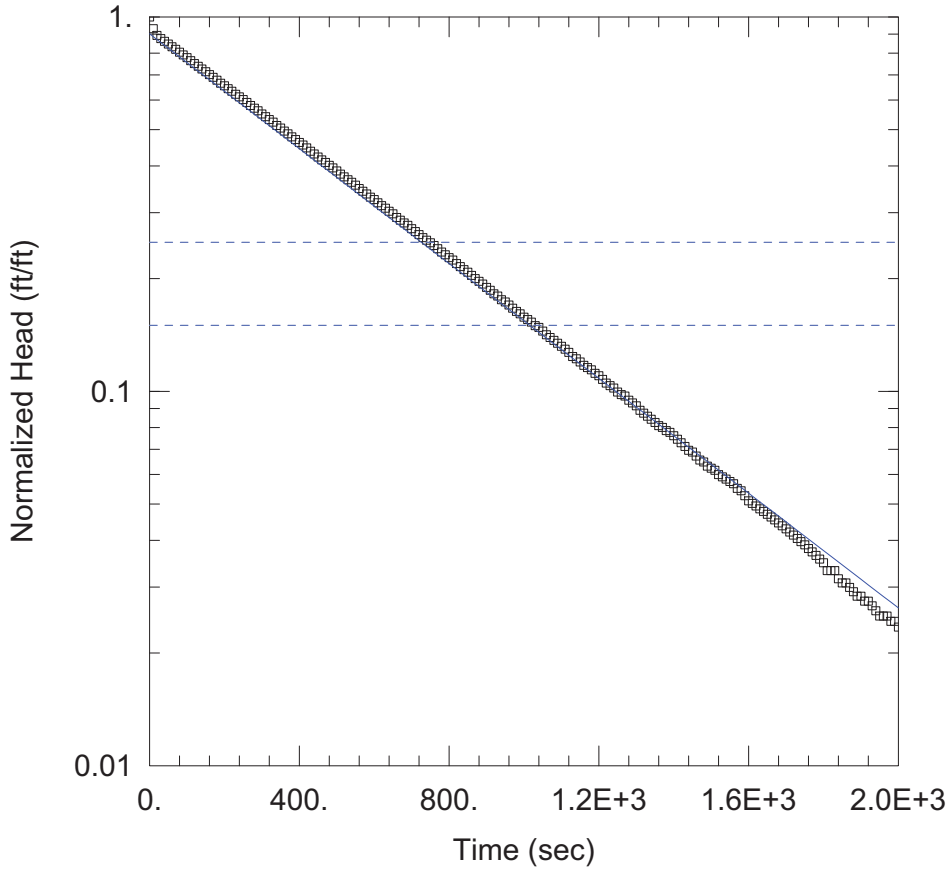

MW-67 (TEST17 EXTRACTION RECOVERY)

Data Set: J:\...\MW-67 T17.aqt
Date: 01/03/08 Time: 12:44:37

PROJECT INFORMATION

Company: GZA GeoEnvironmental
Client: Indian Point Energy Center
Project: 41.0017869.10
Location: Buchanan, New York
Test Well: MW-67
Test Date: 8/24/07

AQUIFER DATA

Saturated Thickness: 300. ft Anisotropy Ratio (Kz/Kr): 0.1

WELL DATA (MW-67 Test17)

Initial Displacement: 17.77 ft Static Water Column Height: 118.5 ft
Total Well Penetration Depth: 118.5 ft Screen Length: 14.75 ft
Casing Radius: 0.08333 ft Wellbore Radius: 0.159 ft

SOLUTION

Aquifer Model: Unconfined Solution Method: Hvorslev

K = 0.204 ft/day y0 = 16.01 ft

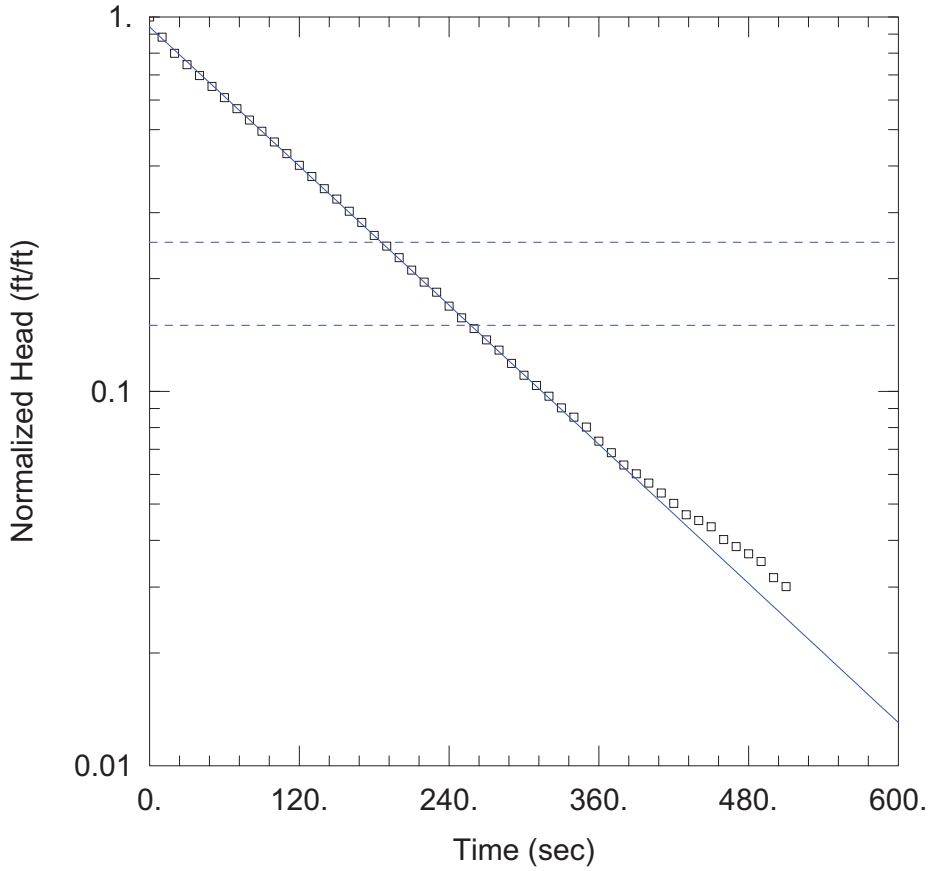

MW-67 (TEST18)

Data Set: J:\...\MW-67 T18.aqt
Date: 08/23/07 Time: 12:21:23

PROJECT INFORMATION

Company: GZA GeoEnvironmental
Client: Indian Point Energy Center
Project: 41.0017869.10
Location: Buchanan, New York
Test Well: MW-67
Test Date: 8/21/07

AQUIFER DATA

Saturated Thickness: 300. ft Anisotropy Ratio (Kz/Kr): 0.1

WELL DATA (MW-67 Test18)

Initial Displacement: 21.36 ft Static Water Column Height: 102. ft
Total Well Penetration Depth: 102. ft Screen Length: 14.75 ft
Casing Radius: 0.08333 ft Wellbore Radius: 0.159 ft

SOLUTION

Aquifer Model: Unconfined Solution Method: Hvorslev

K = 0.8239 ft/day y0 = 20.09 ft

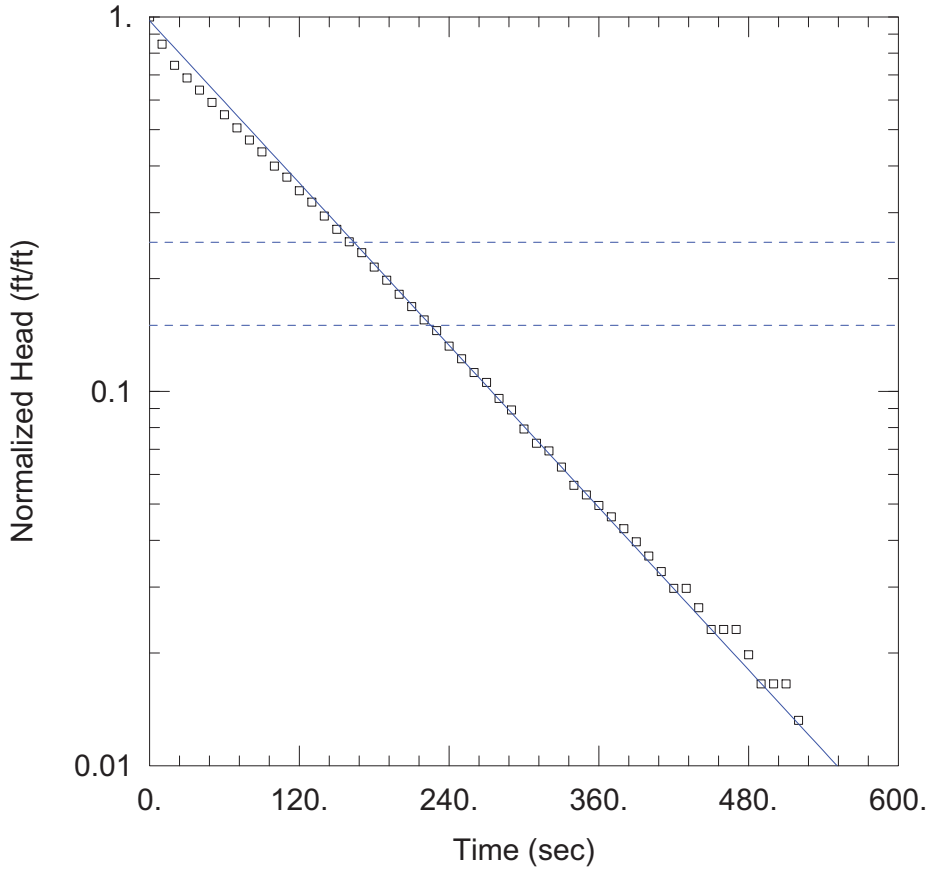

MW-67 (TEST18 EXTRACTION RECOVERY)

Data Set: J:\...\MW-67 T18(R2).aqt
Date: 08/23/07 Time: 12:21:33

PROJECT INFORMATION

Company: GZA GeoEnvironmental
Client: Indian Point Energy Center
Project: 41.0017869.10
Location: Buchanan, New York
Test Well: MW-67
Test Date: 8/21/07

AQUIFER DATA

Saturated Thickness: 300. ft Anisotropy Ratio (Kz/Kr): 0.1

WELL DATA (MW-67 Test18)

Initial Displacement: 10.82 ft Static Water Column Height: 102. ft
Total Well Penetration Depth: 102. ft Screen Length: 14.75 ft
Casing Radius: 0.08333 ft Wellbore Radius: 0.159 ft

SOLUTION

Aquifer Model: Unconfined Solution Method: Hvorslev

K = 0.9609 ft/day y0 = 10.57 ft

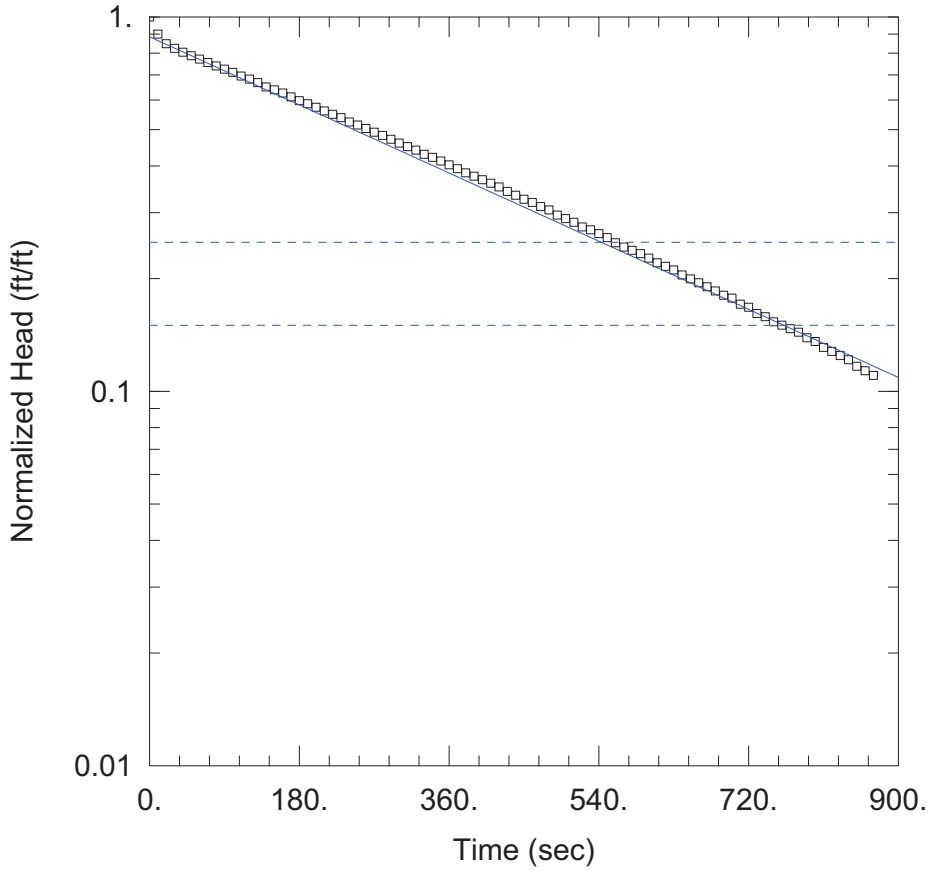

MW-67 (TEST19)

Data Set: J:\...\MW-67 T19.aqt
Date: 08/23/07 Time: 12:21:42

PROJECT INFORMATION

Company: GZA GeoEnvironmental
Client: Indian Point Energy Center
Project: 41.0017869.10
Location: Buchanan, New York
Test Well: MW-67
Test Date: 8/21/07

AQUIFER DATA

Saturated Thickness: 300. ft Anisotropy Ratio (Kz/Kr): 0.1

WELL DATA (MW-67 Test19)

Initial Displacement: 22.35 ft Static Water Column Height: 86.8 ft
Total Well Penetration Depth: 86.8 ft Screen Length: 14.75 ft
Casing Radius: 0.08333 ft Wellbore Radius: 0.159 ft

SOLUTION

Aquifer Model: Unconfined Solution Method: Hvorslev

K = 0.269 ft/day y0 = 19.79 ft

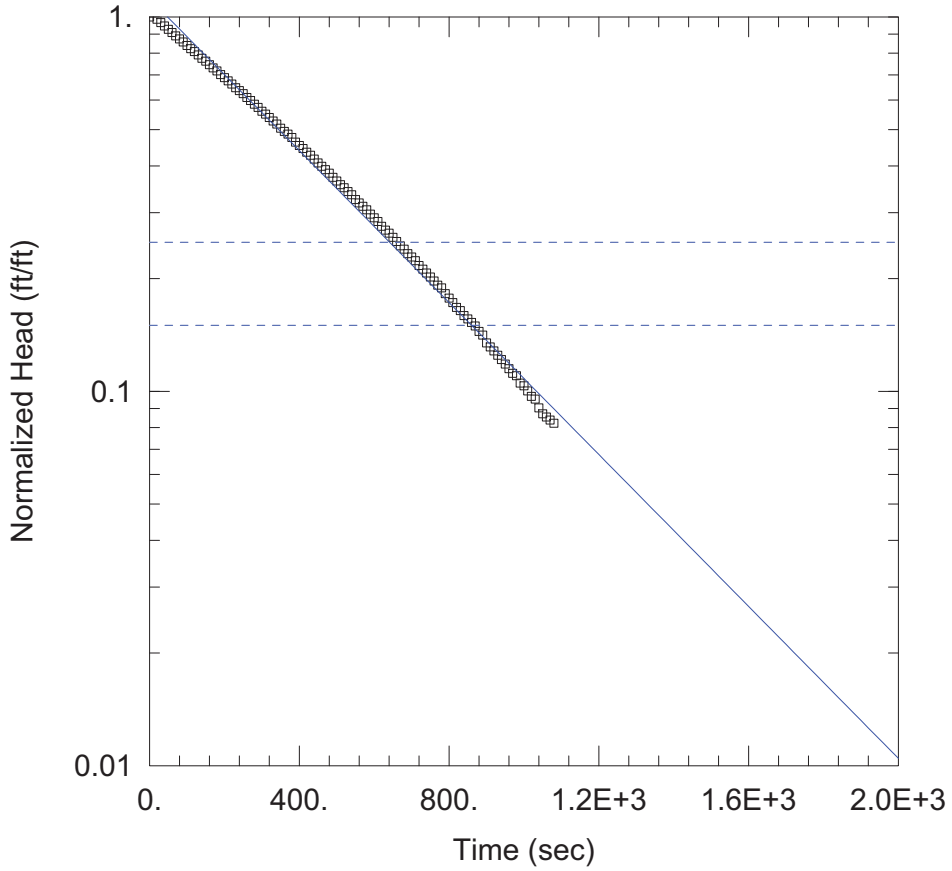

MW-67 (TEST19 EXTRACTION RECOVERY)

Data Set: J:\...\MW-67 T19(R2).aqt
Date: 08/23/07 Time: 12:22:00

PROJECT INFORMATION

Company: GZA GeoEnvironmental
Client: Indian Point Energy Center
Project: 41.0017869.10
Location: Buchanan, New York
Test Well: MW-67
Test Date: 8/21/07

AQUIFER DATA

Saturated Thickness: 300. ft Anisotropy Ratio (Kz/Kr): 0.1

WELL DATA (MW-67 Test19)

Initial Displacement: 21.74 ft Static Water Column Height: 86.8 ft
Total Well Penetration Depth: 86.8 ft Screen Length: 14.75 ft
Casing Radius: 0.08333 ft Wellbore Radius: 0.159 ft

SOLUTION

Aquifer Model: Unconfined Solution Method: Hvorslev

K = 0.2699 ft/day y0 = 24.33 ft

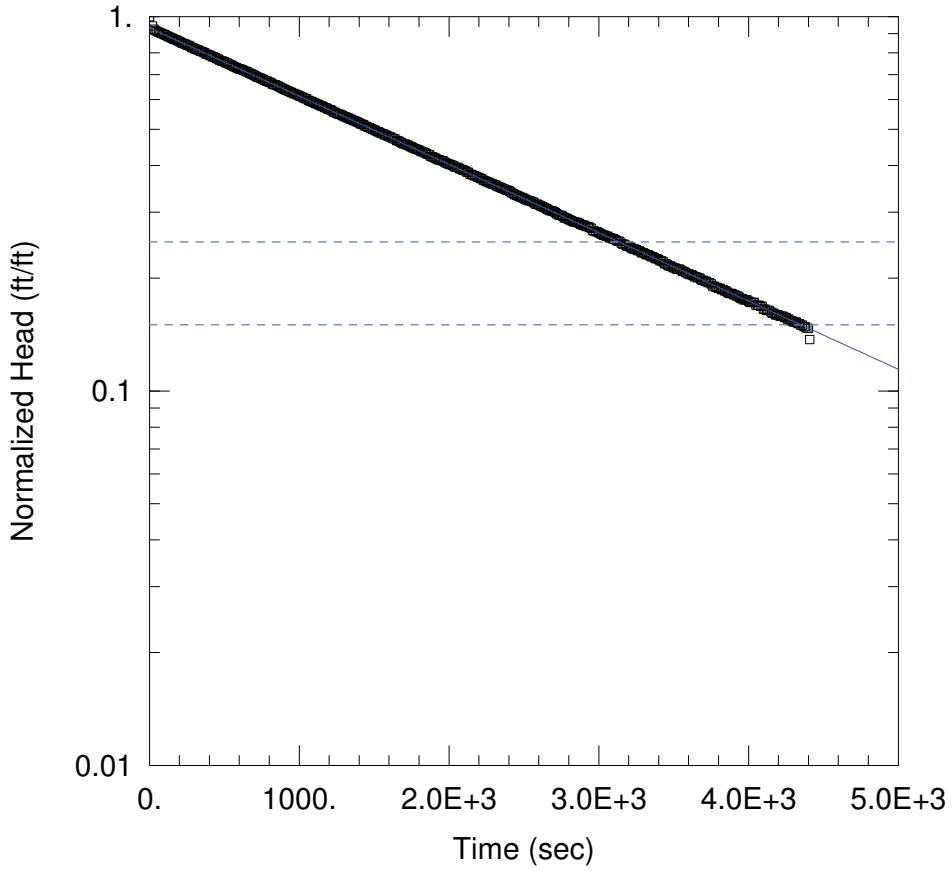

MW-67 (TEST20)

Data Set: J:\...\MW-67 T20A.aqt
Date: 01/02/08 Time: 15:57:05

PROJECT INFORMATION

Company: GZA GeoEnvironmental
Client: Indian Point Energy Center
Project: 41.0017869.10
Location: Buchanan, New York
Test Well: MW-67
Test Date: 8/22/07

AQUIFER DATA

Saturated Thickness: 300. ft Anisotropy Ratio (Kz/Kr): 0.1

WELL DATA (MW-67 Test20)

Initial Displacement: 25.48 ft Static Water Column Height: 60. ft
Total Well Penetration Depth: 60. ft Screen Length: 14.75 ft
Casing Radius: 0.08333 ft Wellbore Radius: 0.159 ft

SOLUTION

Aquifer Model: Unconfined Solution Method: Hvorslev

K = 0.0485 ft/day y0 = 23.76 ft

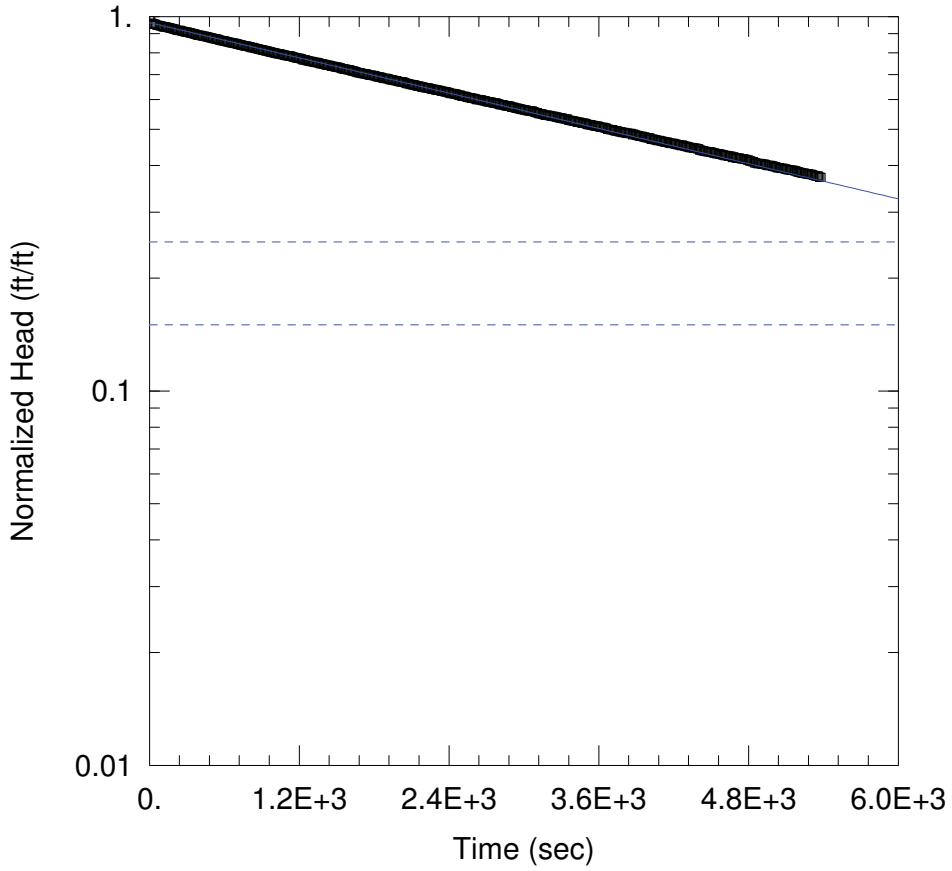

MW-67 (TEST21)

Data Set: J:\...\MW-67 T21A.aqt
Date: 01/02/08 Time: 16:00:27

PROJECT INFORMATION

Company: GZA GeoEnvironmental
Client: Indian Point Energy Center
Project: 41.0017869.10
Location: Buchanan, New York
Test Well: MW-67
Test Date: 8/22/07

AQUIFER DATA

Saturated Thickness: 300. ft Anisotropy Ratio (Kz/Kr): 0.1

WELL DATA (MW-67 Test21)

Initial Displacement: 21.4 ft Static Water Column Height: 44. ft
Total Well Penetration Depth: 44. ft Screen Length: 14.75 ft
Casing Radius: 0.08333 ft Wellbore Radius: 0.159 ft

SOLUTION

Aquifer Model: Unconfined Solution Method: Hvorslev

K = 0.02087 ft/day y0 = 20.61 ft

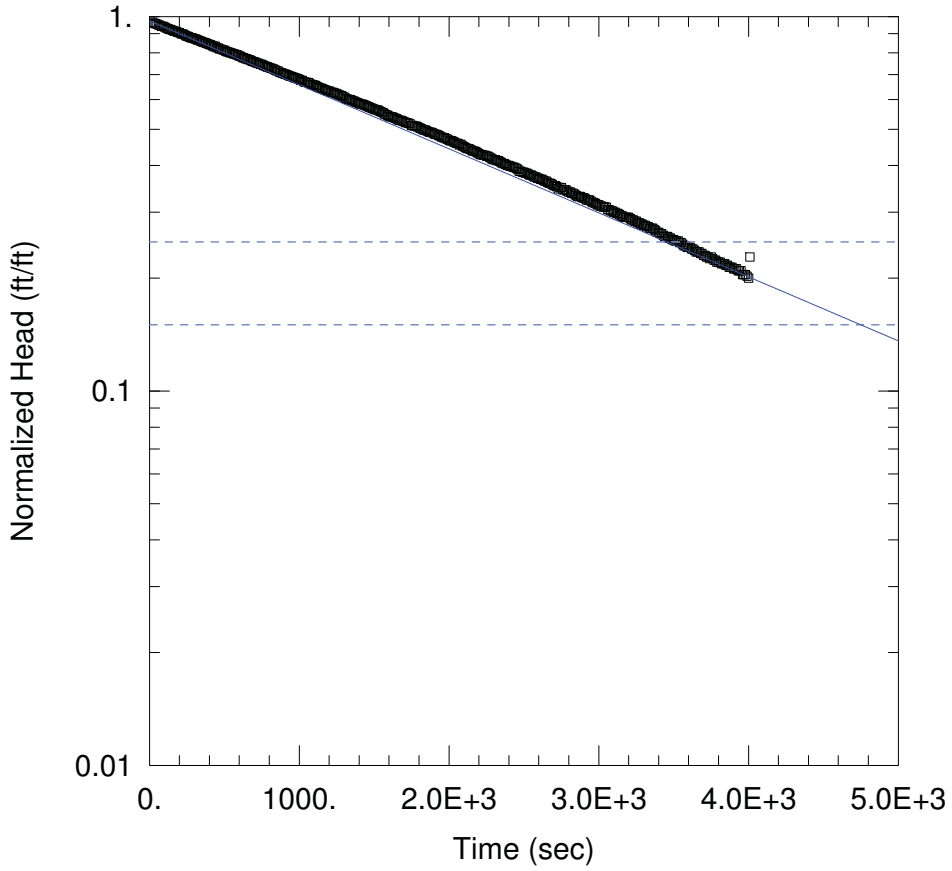

MW-67 (TEST22)

Data Set: J:\...\MW-67 T22A.aqt
Date: 01/02/08 Time: 16:02:16

PROJECT INFORMATION

Company: GZA GeoEnvironmental
Client: Indian Point Energy Center
Project: 41.0017869.10
Location: Buchanan, New York
Test Well: MW-67
Test Date: 8/22/07

AQUIFER DATA

Saturated Thickness: 300. ft Anisotropy Ratio (Kz/Kr): 0.1

WELL DATA (MW-67 Test22)

Initial Displacement: 15.34 ft Static Water Column Height: 34.5 ft
Total Well Penetration Depth: 34.5 ft Screen Length: 14.75 ft
Casing Radius: 0.08333 ft Wellbore Radius: 0.159 ft

SOLUTION

Aquifer Model: Unconfined Solution Method: Hvorslev

K = 0.04545 ft/day y0 = 14.93 ft

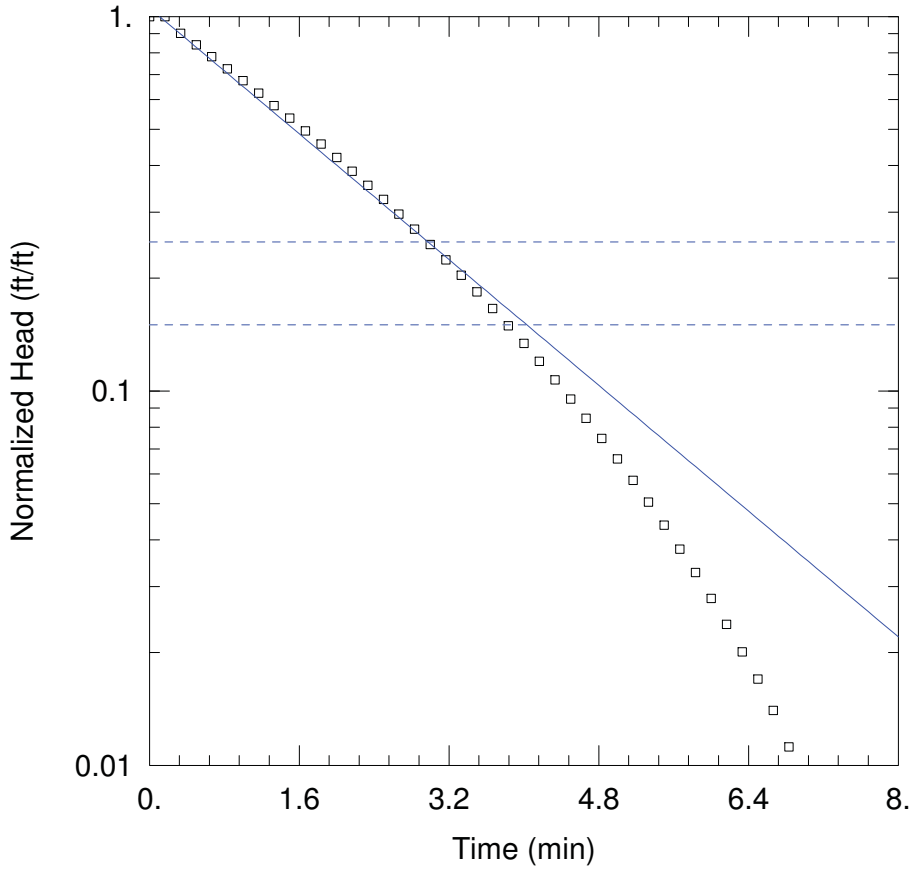

MW-67 (TEST23)

Data Set: J:\...\MW-67 T23.aqt
Date: 01/02/08 Time: 21:23:58

PROJECT INFORMATION

Company: GZA GeoEnvironmental
Client: Indian Point Energy Center
Project: 41.0017869.10
Location: Buchanan, New York
Test Well: MW-67
Test Date: 8/25/07

AQUIFER DATA

Saturated Thickness: 300. ft Anisotropy Ratio (Kz/Kr): 0.1

WELL DATA (MW-67Test23)

Initial Displacement: 13.83 ft Static Water Column Height: 24.4 ft
Total Well Penetration Depth: 24.4 ft Screen Length: 14.75 ft
Casing Radius: 0.08333 ft Wellbore Radius: 0.159 ft

SOLUTION

Aquifer Model: Unconfined Solution Method: Hvorslev

K = 0.931 ft/day y0 = 14.58 ft

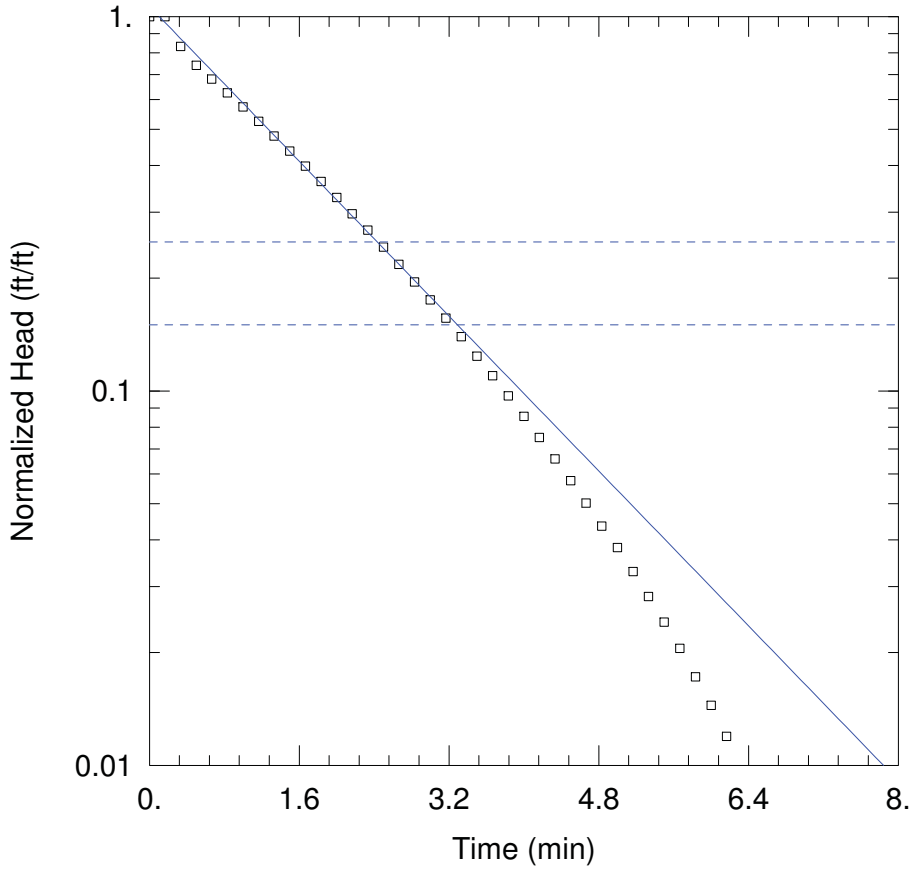

MW-67 (TEST24)

Data Set: J:\...\MW-67 T24.aqt
Date: 01/02/08 Time: 21:53:37

PROJECT INFORMATION

Company: GZA GeoEnvironmental
Client: Indian Point Energy Center
Project: 41.0017869.10
Location: Buchanan, New York
Test Well: MW-67
Test Date: 8/25/07

AQUIFER DATA

Saturated Thickness: 300. ft Anisotropy Ratio (Kz/Kr): 0.1

WELL DATA (MW-67Test24A)

Initial Displacement: 14.8 ft Static Water Column Height: 16.9 ft
Total Well Penetration Depth: 16.9 ft Screen Length: 14.75 ft
Casing Radius: 0.08333 ft Wellbore Radius: 0.159 ft

SOLUTION

Aquifer Model: Unconfined Solution Method: Hvorslev

K = 1.146 ft/day y0 = 15.75 ft

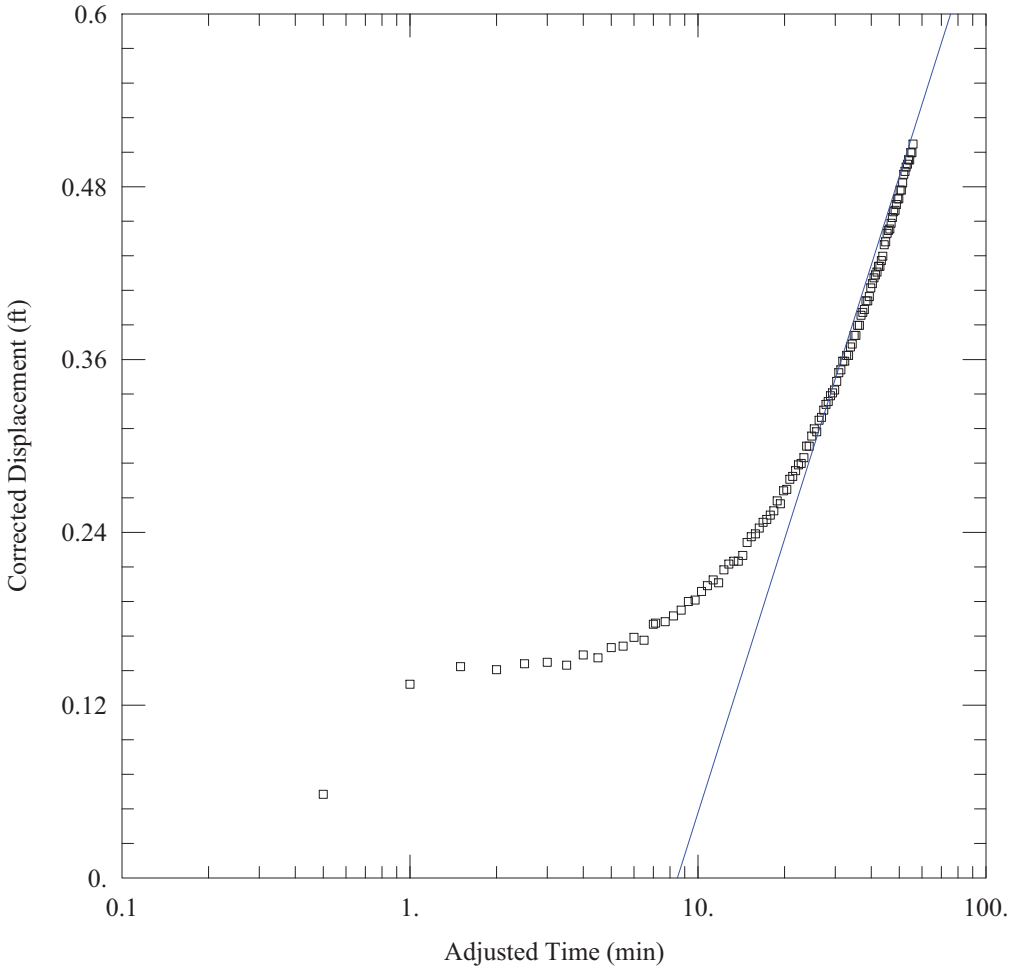

MW-109 EXTRACTION

Data Set: J:\...\MW-109 sy May07 theis.aqt
Date: 09/12/07 Time: 14:28:16

PROJECT INFORMATION

Company: GZA GeoEnvironmental
Client: Indian Point Energy Center
Project: 41.0017869.10
Location: Buchanan, NY
Test Well: MW-109
Test Date: 5/10/07

AQUIFER DATA

Saturated Thickness: 300. ft Anisotropy Ratio (Kz/Kr): 1.

WELL DATA

Pumping Wells

Well Name	X (ft)	Y (ft)
MW-109	0	0

Observation Wells

Well Name	X (ft)	Y (ft)
▫ MW-109	0	0

SOLUTION

Aquifer Model: Unconfined Solution Method: Cooper-Jacob

T = 301.2 ft^2/day S = 142.9

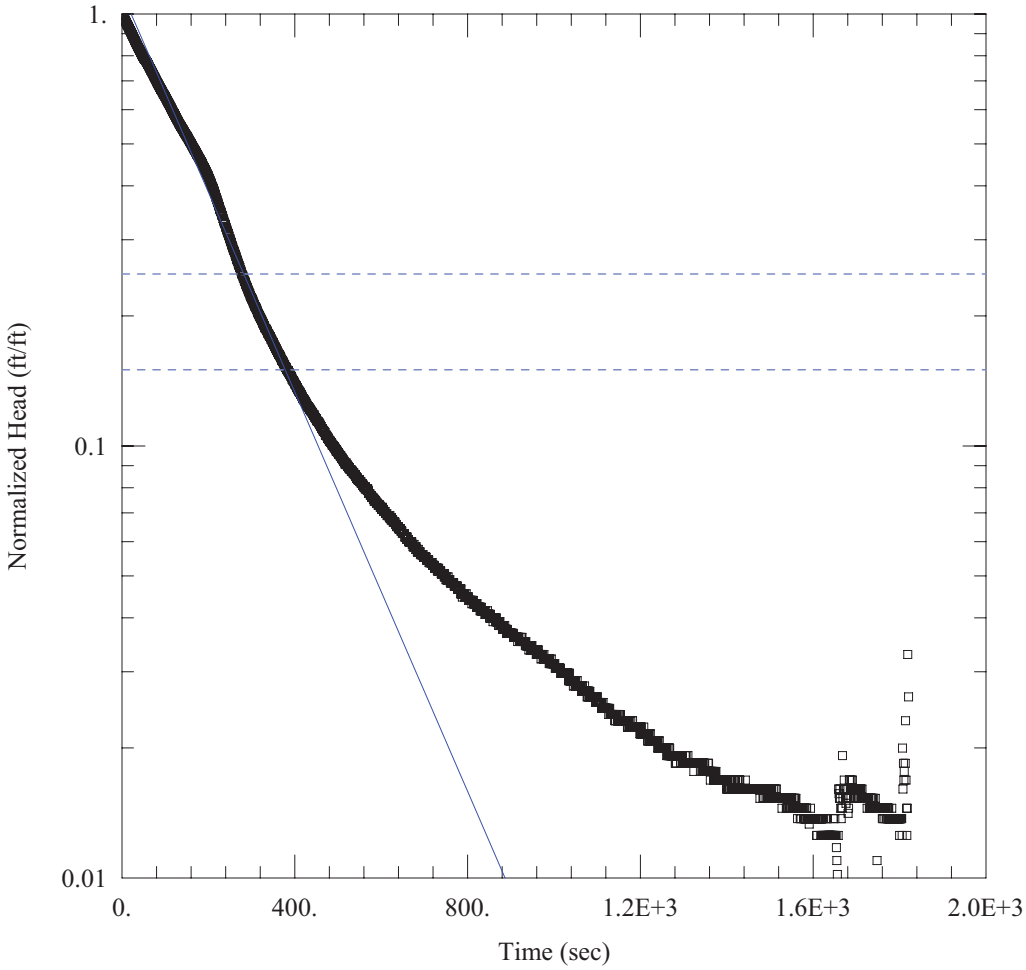

MW-111 EXTRACTION TEST RECOVERY

Data Set: J:\...\sy111MW111 recovery.aqt
Date: 09/11/07 Time: 18:41:38

PROJECT INFORMATION

Company: GZA GeoEnvironmental
Client: Indian Point Energy Center
Project: 41.0017869.10
Location: Buchanan, NY
Test Well: MW-111
Test Date: 5/30/06

AQUIFER DATA

Saturated Thickness: 300. ft
Anisotropy Ratio (Kz/Kr): 0.1

WELL DATA (MW-111)

Initial Displacement: 2.552 ft
Static Water Column Height: 5.5 ft
Total Well Penetration Depth: 8.47 ft
Screen Length: 8.47 ft
Casing Radius: 0.159 ft
Wellbore Radius: 0.159 ft

SOLUTION

Aquifer Model: Unconfined
Solution Method: Hvorslev

K = 3.518 ft/day
y0 = 2.859 ft

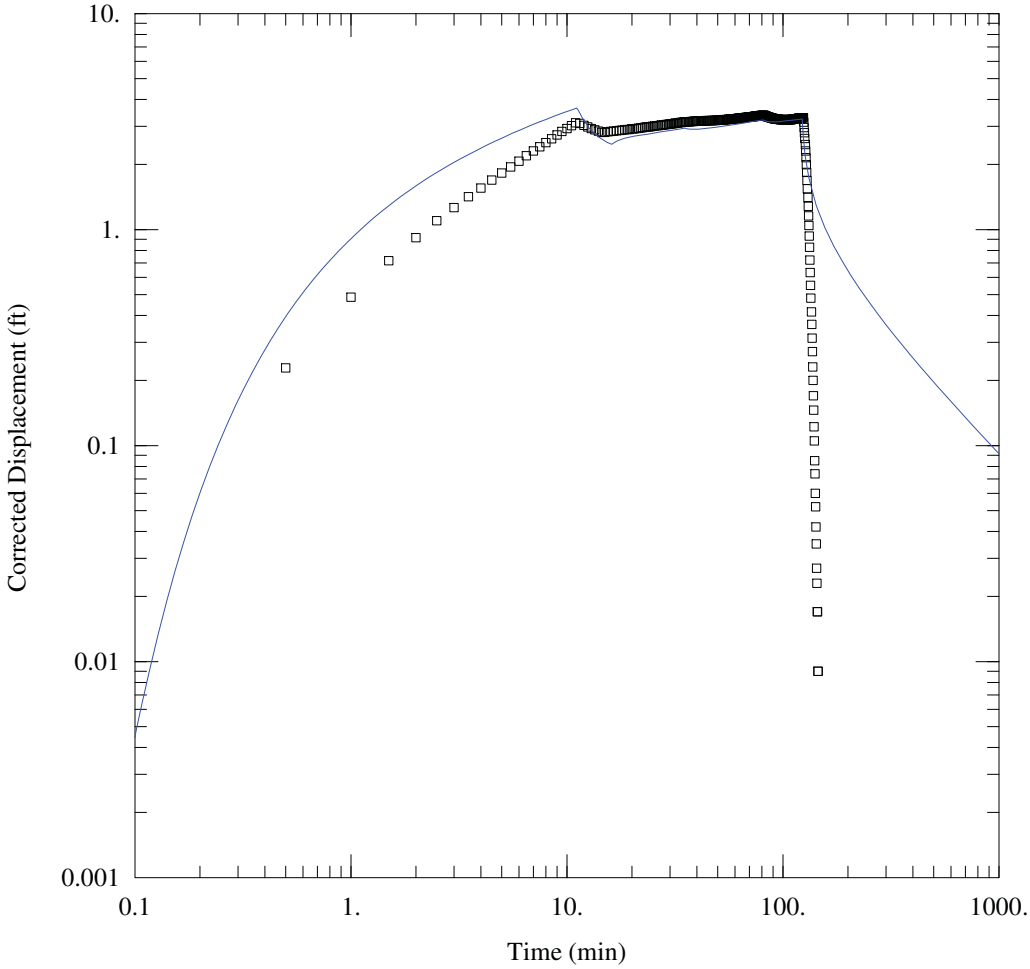

U3-3 EXTRACTION

Data Set: J:\...\U3-3 sy May07 theis.aqt
Date: 01/03/08 Time: 15:10:17

PROJECT INFORMATION

Company: GZA GeoEnvironmental
Client: Indian Point Energy Center
Project: 41.0017869.10
Location: Buchanan, NY
Test Well: U3-3
Test Date: 5/11/07

WELL DATA

Pumping Wells

Well Name	X (ft)	Y (ft)
U3-3	0	0

Observation Wells

Well Name	X (ft)	Y (ft)
▫ U3-3	0	0

SOLUTION

Aquifer Model: Unconfined
Solution Method: Theis

T = 15.05 ft^2/day
S = 0.1398
Kz/Kr = 1.
b = 300. ft

Estimate Transmissivity from Specific Capcity Data

$R := 0.125$ Radius of Well (FT.)

$S := 0.01$ Storage Coefficient, Assumed

$t := \frac{30}{1440}$ Pumping Duration (Days.)

$T := 100$ Transmissivity (GPD/FT) *Initial Guess*

$Qp := 0.225$ Pumping Rate (GPM)

$s := 6.5$ Drawdown (FT.)

$\frac{Qp}{s} = 0.035$ Specific Capcity (GPM/FT)

$$aT := \text{root}\left(\frac{Qp}{s} - \frac{T}{264 \cdot \log\left(\frac{0.3 \cdot T \cdot t}{R^2 \cdot S}\right)}, T\right)$$

Groundwater Resource Evaluation
William C. Walton Mc-Graw-hill 1970

$T := aT$

$T = 28$ Computed Transmissivity (GPD/ Ft)

$Tft := \frac{T}{7.48}$

$Tft = 4$ **Computed Transmissivity (Sq.ft./Day)**

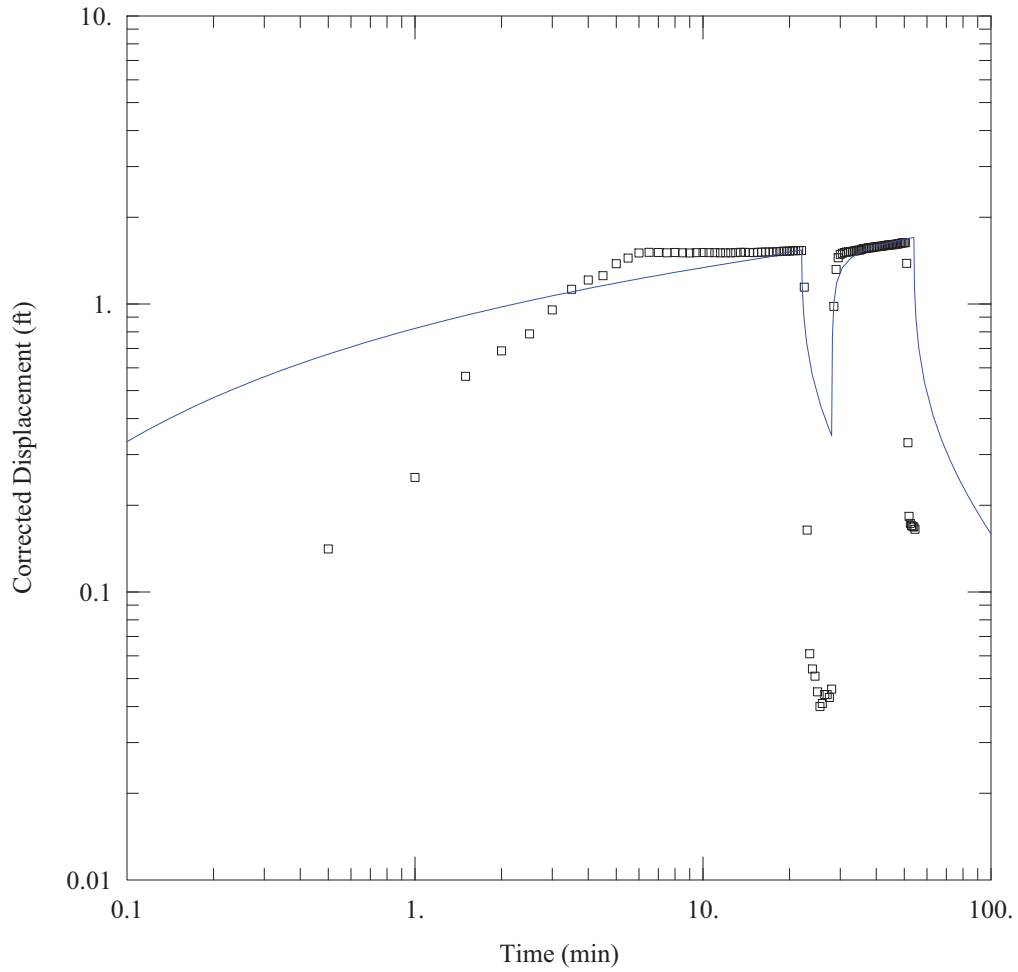

U3-4S EXTRACTION

Data Set: J:\...\U3-4S sy May07 theis.aqt
Date: 09/12/07 Time: 14:29:51

PROJECT INFORMATION

Company: GZA GeoEnvironmental
Client: Indian Point Energy Center
Project: 41.0017869.10
Location: Buchanan, NY
Test Well: U3-4S
Test Date: 5/14/07

WELL DATA

Pumping Wells

Well Name	X (ft)	Y (ft)
U3-4S	0	0

Observation Wells

Well Name	X (ft)	Y (ft)
▫ U3-4S	0	0

SOLUTION

Aquifer Model: Unconfined
Solution Method: Theis

T = 333.5 ft^2/day
S = 0.2194
Kz/Kr = 1.
b = 300. ft

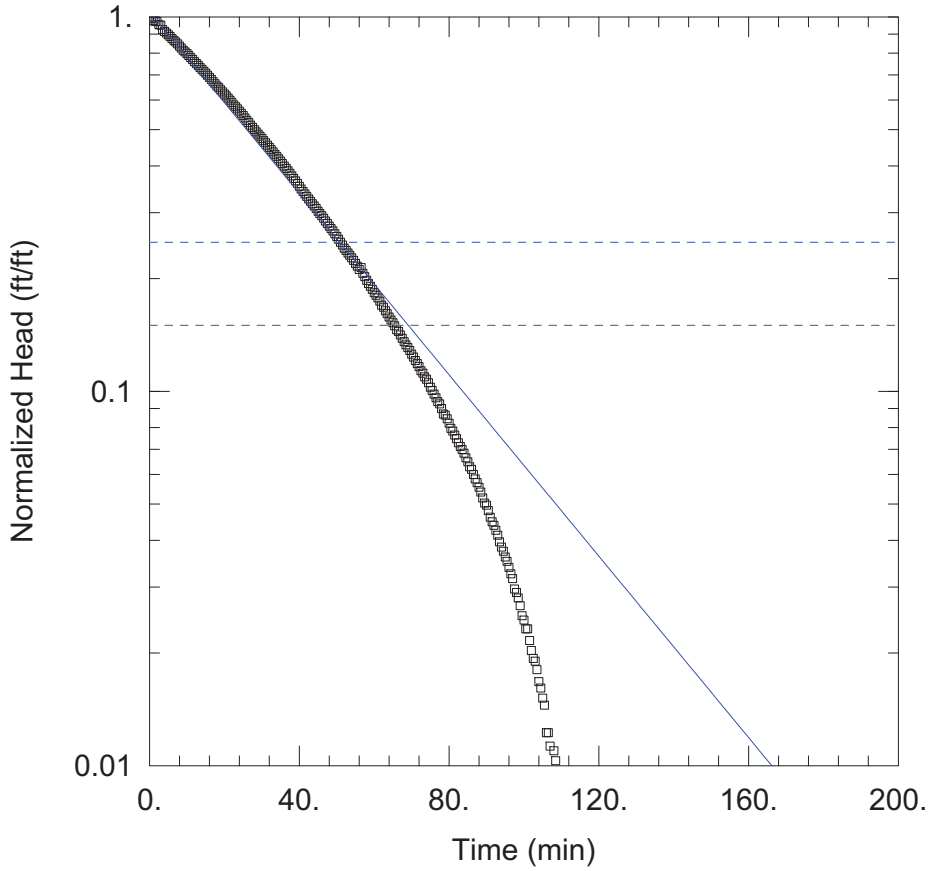

I-2 EXTRACTION TEST RECOVERY

Data Set: J:\...\I-2 recovery.aqt
Date: 07/01/07 Time: 18:20:27

PROJECT INFORMATION

Company: GZA GeoEnvironmental
Client: Indian Point Energy Center
Project: 41.0017869.10
Location: Buchanan, New York
Test Well: I-2
Test Date: 5/22/07

AQUIFER DATA

Saturated Thickness: 300. ft
Anisotropy Ratio (Kz/Kr): 0.1

WELL DATA (I-2)

Initial Displacement: 3.102 ft
Static Water Column Height: 9.16 ft
Total Well Penetration Depth: 9.16 ft
Screen Length: 9.16 ft
Casing Radius: 0.08333 ft
Wellbore Radius: 0.167 ft

SOLUTION

Aquifer Model: Unconfined
Solution Method: Hvorslev

K = 0.07849 ft/day
y0 = 3.198 ft

APPENDIX H – SLUG TEST FIELD LOGS

PNEUMATIC SLUG TEST LOG

GZA GEOENVIRONMENTAL OF NEW YORK 440 NINTH AVENUE, 18th FLOOR NEW YORK, NEW YORK 10001 SCIENTISTS AND ENGINEERS	Client Entergy Indian Point Energy Center	WELL ID	MW - 36 - 26
		TEST NO.	1 of 1
		FILE NO.	41.0017869.01
		PROJECT LOCATION	Indian Point

GZA ENGINEER	Angela Hough	BORING COORDINATES	N 463090.6040	E	604657.5926
GZA ENGINEER	Sara Covelli	GROUND SURFACE EL.(FT)	11.799	DATUM	NGVD 29
GZA ENGINEER		TOP OF CASING EL.(FT)	11.598	DATE	5/9/07
		WELL DEPTH (FT)	26.00		
WELL DIAMETER	2 INCH	GROUND WATER DEPTH	3.71 FT		
NO. OF WELLS IN CLUSTER	3	(STATIC WATER LEVEL DEPTH)			

MEASUREMENTS TAKEN FROM:

- [ ] ground surface
- [x] top of casing

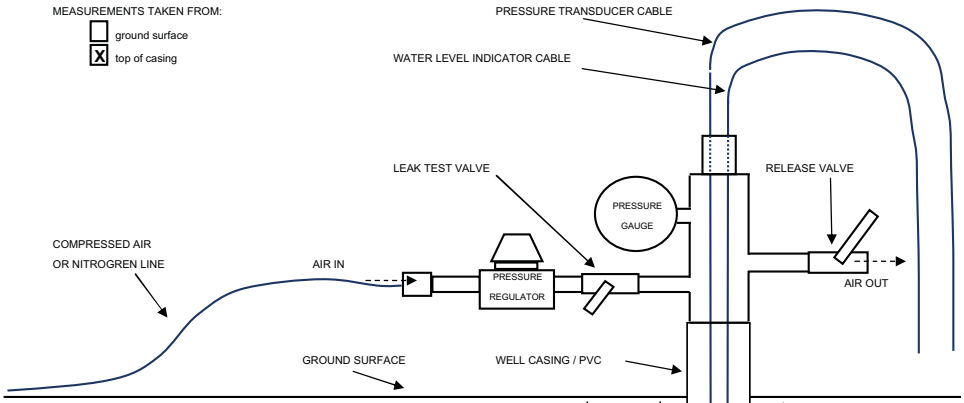

LEGEND:

DTB	DEPTH TO BOTTOM OF WELL FROM GROUND SURFACE	26.00	FT
DTS	DEPTH TO WELL SCREEN FROM GROUND SURFACE	11.00	FT
DTW	DEPTH TO STATIC WATER LEVEL FROM GROUND SURFACE	3.71	FT
WC	WATER COLUMN HEIGHT	22.29	FT
CH	CHANGE IN HEAD AFTER PRESSURIZATION	5.00	FT
AS	WATER COLUMN ABOVE SCREEN	7.29	FT

DTB	26.00	FT
− **DTW**	3.71	FT
= **WC**	22.29	FT
DTS	11.00	FT
− **DTW**	3.71	FT
= **AS**	7.29	FT
AS	7.29	FT
− SAFE MARGIN	2.29	FT
= **CH**	5.00	FT
CH	5.00	FT
+ **DTW**	3.71	FT
=WATER LEVEL INDICATOR DEPTH	8.71	FT
CH / 2.31 =	2.16	PSI
= PRESSURE APPLIED TO WELL HEAD		
DTW**	3.71	FT
+ TRANSDUCER READING	13.943	FT
= TRANSDUCER DEPTH	17.65	FT

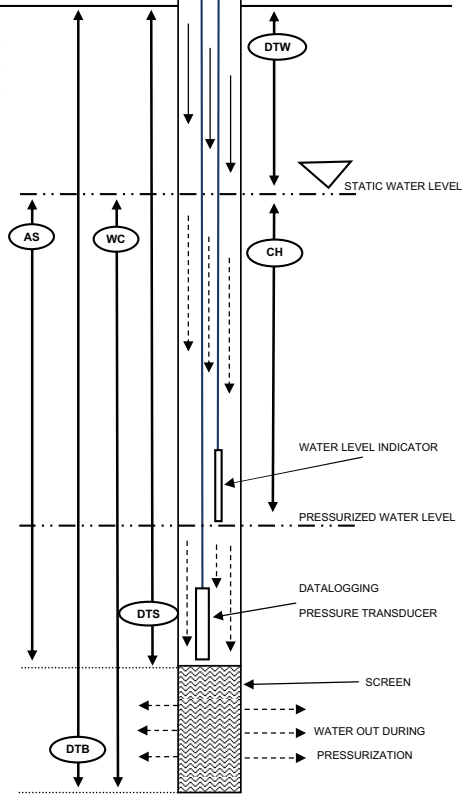

Time Test Start	14:04	
Transducer Reading at test start	13.966	FT
Time of Pressurization	14:05	
Time of Equilibrium	14:10	
Equilibrium Transducer Reading	13.970	FT
Time of Pressure Release	14:10	
Time Test Stop	14:12	

NOTES:

PNEUMATIC SLUG TEST LOG

GZA GEOENVIRONMENTAL OF NEW YORK 440 NINTH AVENUE, 18th FLOOR NEW YORK, NEW YORK 10001 SCIENTISTS AND ENGINEERS	Client Entergy Indian Point Energy Center	WELL ID	MW - 36 - 41
		TEST NO.	1 of 1
		FILE NO.	41.0017869.01
		PROJECT LOCATION	Indian Point

GZA ENGINEER	Angela Hough	BORING COORDINATES	N 463090.3597	E	604657.5278
GZA ENGINEER	Sara Covelli	GROUND SURFACE EL.(FT)	11.799	DATUM	NGVD 29
GZA ENGINEER		TOP OF CASING EL.(FT)	11.754	DATE	1/3/07
		WELL DEPTH (FT)	41.00		
WELL DIAMETER	1 INCH	GROUND WATER DEPTH	5.00 FT		
NO. OF WELLS IN CLUSTER	3	(STATIC WATER LEVEL DEPTH)			

MEASUREMENTS TAKEN FROM:

- [ ] ground surface
- [x] top of casing

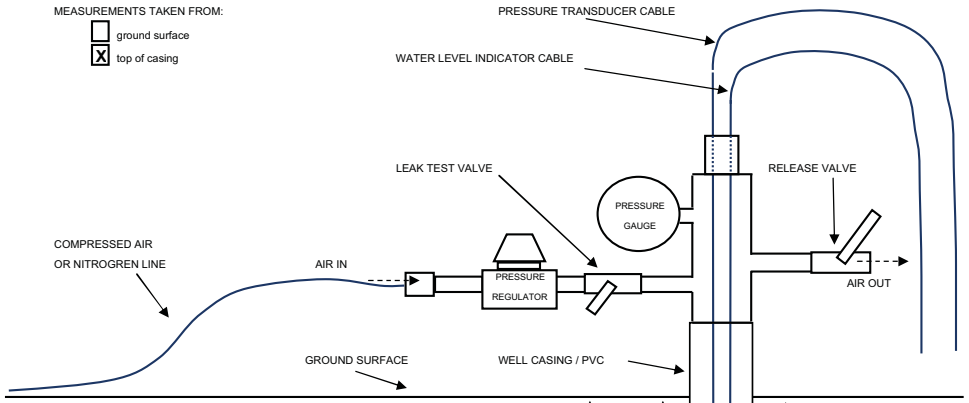

LEGEND:

DTB	DEPTH TO BOTTOM OF WELL FROM GROUND SURFACE	41.00	FT
DTS	DEPTH TO WELL SCREEN FROM GROUND SURFACE	36.00	FT
DTW	DEPTH TO STATIC WATER LEVEL FROM GROUND SURFACE	5.00	FT
WC	WATER COLUMN HEIGHT	36.00	FT
CH	CHANGE IN HEAD AFTER PRESSURIZATION	10.00	FT
AS	WATER COLUMN ABOVE SCREEN	31.00	FT

DTB	41.00	FT
− **DTW**	5.00	FT
= **WC**	36.00	FT
DTS	36.00	FT
− **DTW**	5.00	FT
= **AS**	31.00	FT
AS	31.00	FT
− SAFE MARGIN	21.00	FT
= **CH**	10.00	FT
CH	10.00	FT
+ **DTW**	5.00	FT
=WATER LEVEL INDICATOR DEPTH	15.00	FT
CH / 2.31 =	4.33	PSI
= PRESSURE APPLIED TO WELL HEAD		
DTW**	4.30	FT
+ TRANSDUCER READING	12.057	FT
= TRANSDUCER DEPTH	16.36	FT

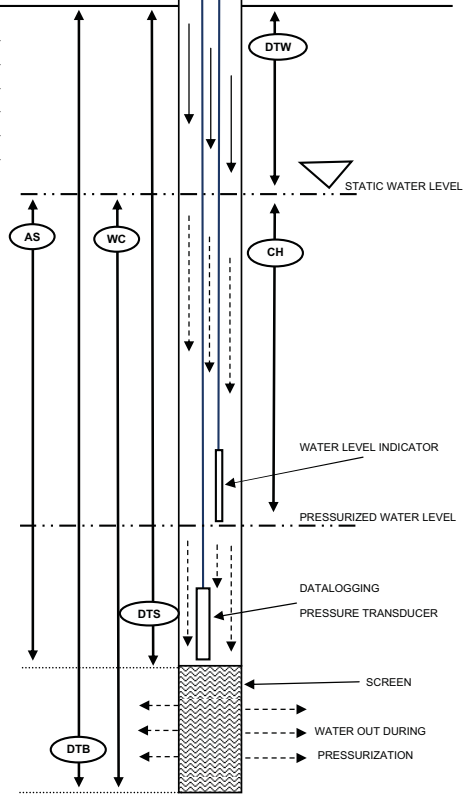

Time Test Start	12:06	
Transducer Reading at test start	11.850	FT
Time of Pressurization	12:07	
Time of Equilibrium	13:47	
Equilibrium Transducer Reading	11.346	FT
Time of Pressure Release	13:47	
Time Test Stop	14:29	

NOTES:

** Static water level is 5.00' b/g. Depth to water used to calculate transducer depth was measured during a falling head period after displacement resulting from transducer installation. Due to time constraints and slow response time of this well, pressurization was administered before static water level had been re-established. However, achievement of equilibrium water levels after pressurization and depressurization of well head was determined based on static water level of 5.00' b/g.
At 13:31, accidental adjustment of air flow regulator resulted in slight depressurization of well head. This adustment was immediately corrected.
Due to time constraints, only one pneumatic slug test was administered at this well.

PNEUMATIC SLUG TEST LOG

GZA GEOENVIRONMENTAL OF NEW YORK 440 NINTH AVENUE, 18th FLOOR NEW YORK, NEW YORK 10001 SCIENTISTS AND ENGINEERS	Client Entergy Indian Point Energy Center	WELL ID	MW - 36 - 53
		TEST NO.	1 of 1
		FILE NO.	41.0017869.01
		PROJECT LOCATION	Indian Point

GZA ENGINEER	Angela Hough	BORING COORDINATES	N 463090.4372	E	604657.4958
GZA ENGINEER	Sara Covelli	GROUND SURFACE EL.(FT)	11.799	DATUM	NGVD 29
GZA ENGINEER		TOP OF CASING EL.(FT)	11.670	DATE	1/4/07
		WELL DEPTH (FT)	53.00		
WELL DIAMETER	1 INCH	GROUND WATER DEPTH	5.4 FT		
NO. OF WELLS IN CLUSTER	3	(STATIC WATER LEVEL DEPTH)			

MEASUREMENTS TAKEN FROM:

- [ ] ground surface
- [x] top of casing

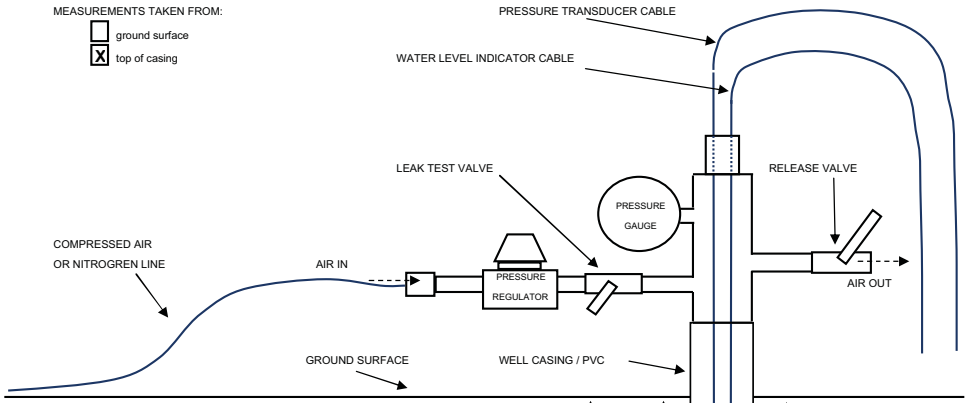

LEGEND:

DTB	DEPTH TO BOTTOM OF WELL FROM GROUND SURFACE	53.00	FT
DTS	DEPTH TO WELL SCREEN FROM GROUND SURFACE	48.00	FT
DTW	DEPTH TO STATIC WATER LEVEL FROM GROUND SURFACE	5.4	FT
WC	WATER COLUMN HEIGHT	47.60	FT
CH	CHANGE IN HEAD AFTER PRESSURIZATION	32.60	FT
AS	WATER COLUMN ABOVE SCREEN	42.60	FT

DTB	53.00	FT
− **DTW**	5.4	FT
= **WC**	47.60	FT
DTS	48.00	FT
− **DTW**	5.4	FT
= **AS**	42.60	FT
AS	42.60	FT
− SAFE MARGIN	10.00	FT
= **CH**	32.60	FT
CH	32.60	FT
+ **DTW**	5.4	FT
=WATER LEVEL INDICATOR DEPTH	38.00	FT
CH / 2.31 =	14.11	PSI
= PRESSURE APPLIED TO WELL HEAD		
DTW	5.4	FT
+ TRANSDUCER READING	39.966	FT
= TRANSDUCER DEPTH	45.37	FT

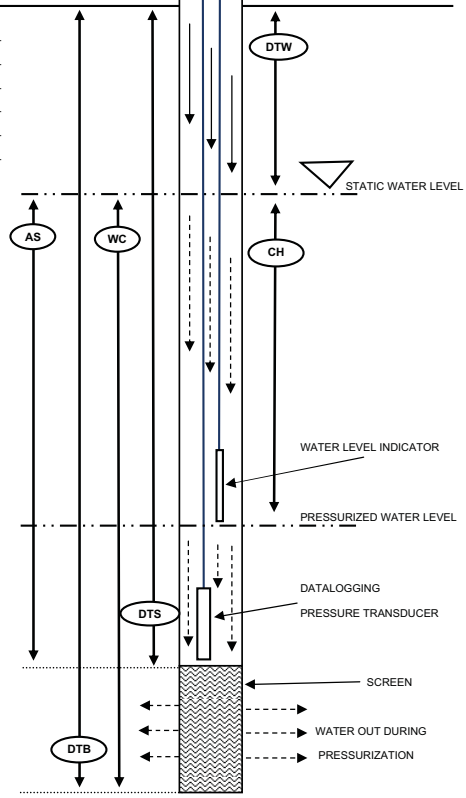

Time Test Start	10:42	
Transducer Reading at test start	40.142	FT
Time of Pressurization	10:43	
Time of Equilibrium	11:47	
Equilibrium Transducer Reading	39.838	FT
Time of Pressure Release	11:48	
Time Test Stop	12:54	

NOTES:

Due to time constraints, only one pneumatic slug test was administered at this well.

PNEUMATIC SLUG TEST LOG

GZA GEOENVIRONMENTAL OF NEW YORK 440 NINTH AVENUE, 18th FLOOR NEW YORK, NEW YORK 10001 SCIENTISTS AND ENGINEERS	Client Entergy Indian Point Energy Center	WELL ID	MW - 37 - 32
		TEST NO.	1 of 2
		FILE NO.	41.0017869.01
		PROJECT LOCATION	Indian Point

GZA ENGINEER	Angela Hough	BORING COORDINATES	N 463075.1528	E	604604.8059
GZA ENGINEER	Sara Covelli	GROUND SURFACE EL.(FT)	15.021	DATUM	NGVD 29
GZA ENGINEER		TOP OF CASING EL.(FT)	14.791	DATE	1/3/07
		WELL DEPTH (FT)	32.50		
WELL DIAMETER	1 INCH	GROUND WATER DEPTH	10.2 FT		
NO. OF WELLS IN CLUSTER	4	(STATIC WATER LEVEL DEPTH)			

MEASUREMENTS TAKEN FROM:

- [ ] ground surface
- [x] top of casing

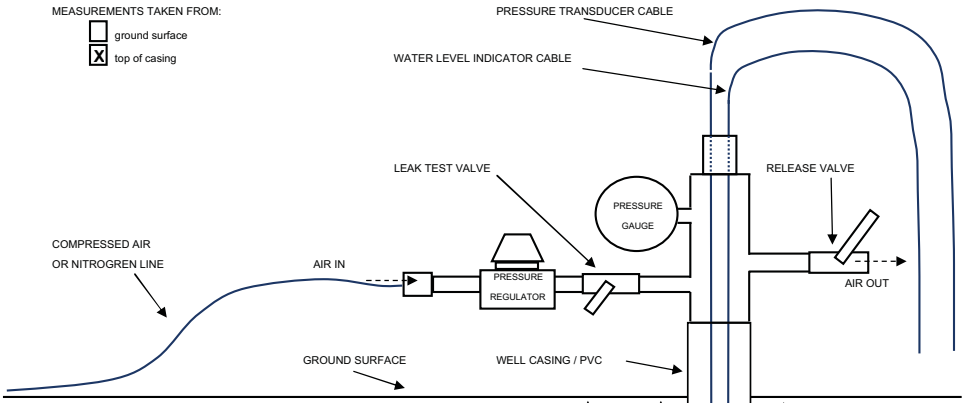

LEGEND:

DTB	DEPTH TO BOTTOM OF WELL FROM GROUND SURFACE	32.50	FT
DTS	DEPTH TO WELL SCREEN FROM GROUND SURFACE	28.00	FT
DTW	DEPTH TO STATIC WATER LEVEL FROM GROUND SURFACE	10.2	FT
WC	WATER COLUMN HEIGHT	22.30	FT
CH	CHANGE IN HEAD AFTER PRESSURIZATION	7.80	FT
AS	WATER COLUMN ABOVE SCREEN	17.80	FT

DTB	32.50	FT
− **DTW**	10.2	FT
= **WC**	22.30	FT
DTS	28.00	FT
− **DTW**	10.2	FT
= **AS**	17.80	FT
AS	17.80	FT
− SAFE MARGIN	10.00	FT
= **CH**	7.80	FT
CH	7.80	FT
+ **DTW**	10.2	FT
=WATER LEVEL INDICATOR DEPTH	18.00	FT
CH / 2.31 =	3.38	PSI
= PRESSURE APPLIED TO WELL HEAD		
DTW	10.2	FT
+ TRANSDUCER READING	10.416	FT
= TRANSDUCER DEPTH	20.62	FT

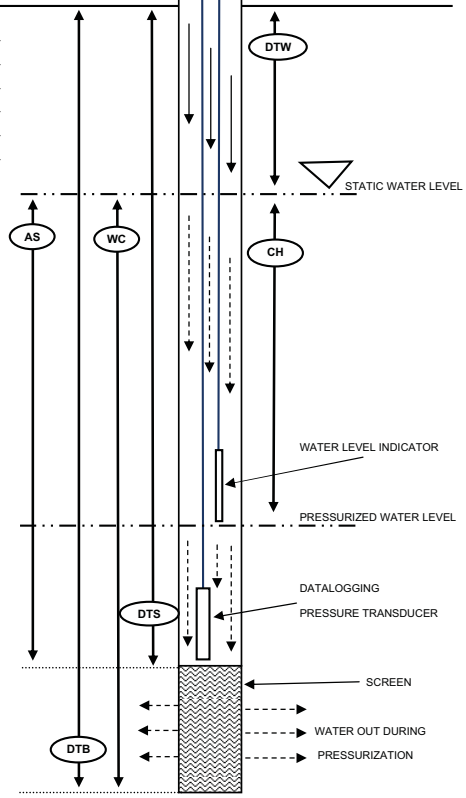

Time Test Start	10:19	
Transducer Reading at test start	10.441	FT
Time of Pressurization	10:19	
Time of Equilibrium	10:24	
Equilibrium Transducer Reading	10.445	FT
Time of Pressure Release	10:24	
Time Test Stop	10:26	

NOTES:

PNEUMATIC SLUG TEST LOG

GZA GEOENVIRONMENTAL OF NEW YORK 440 NINTH AVENUE, 18th FLOOR NEW YORK, NEW YORK 10001 SCIENTISTS AND ENGINEERS	Client Entergy Indian Point Energy Center	WELL ID	MW - 37 - 32
		TEST NO.	2 of 2
		FILE NO.	41.0017869.01
		PROJECT LOCATION	Indian Point

GZA ENGINEER	Angela Hough	BORING COORDINATES	N 463075.1528	E	604604.8059
GZA ENGINEER	Sara Covelli	GROUND SURFACE EL.(FT)	15.021	DATUM	NGVD 29
GZA ENGINEER		TOP OF CASING EL.(FT)	14.791	DATE	1/3/07
		WELL DEPTH (FT)	32.50		
WELL DIAMETER	1 INCH	GROUND WATER DEPTH	10.2 FT		
NO. OF WELLS IN CLUSTER	4	(STATIC WATER LEVEL DEPTH)			

MEASUREMENTS TAKEN FROM:

- [ ] ground surface
- [x] top of casing

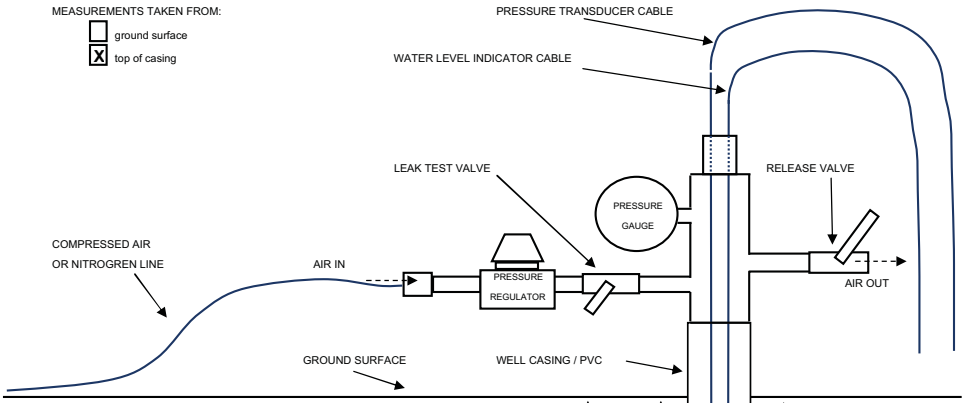

LEGEND:

DTB	DEPTH TO BOTTOM OF WELL FROM GROUND SURFACE	32.50	FT
DTS	DEPTH TO WELL SCREEN FROM GROUND SURFACE	28.00	FT
DTW	DEPTH TO STATIC WATER LEVEL FROM GROUND SURFACE	10.2	FT
WC	WATER COLUMN HEIGHT	22.30	FT
CH	CHANGE IN HEAD AFTER PRESSURIZATION	7.80	FT
AS	WATER COLUMN ABOVE SCREEN	17.80	FT

DTB	32.50	FT
− **DTW**	10.2	FT
= **WC**	22.30	FT
DTS	28.00	FT
− **DTW**	10.2	FT
= **AS**	17.80	FT
AS	17.80	FT
− SAFE MARGIN	10.00	FT
= **CH**	7.80	FT
CH	7.80	FT
+ **DTW**	10.2	FT
=WATER LEVEL INDICATOR DEPTH	18.00	FT
CH / 2.31 =	3.38	PSI
= PRESSURE APPLIED TO WELL HEAD		
DTW	10.2	FT
+ TRANSDUCER READING	10.416	FT
= TRANSDUCER DEPTH	20.62	FT

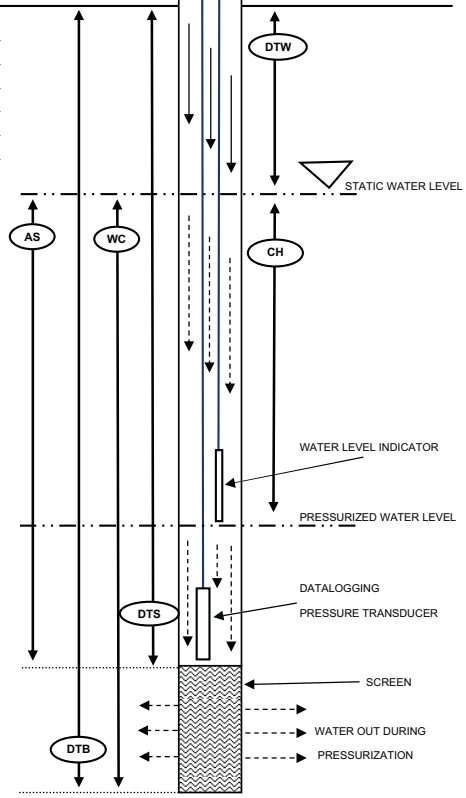

Time Test Start	10:26	
Transducer Reading at test start	10.458	FT
Time of Pressurization	10:26	
Time of Equilibrium	10:28	
Equilibrium Transducer Reading	10.461	FT
Time of Pressure Release	10:28	
Time Test Stop	10:29	

NOTES:

PNEUMATIC SLUG TEST LOG

GZA GEOENVIRONMENTAL OF NEW YORK 440 NINTH AVENUE, 18th FLOOR NEW YORK, NEW YORK 10001 SCIENTISTS AND ENGINEERS	Client Entergy Indian Point Energy Center	WELL ID	MW - 37 - 40
		TEST NO.	1 of 1
		FILE NO.	41.0017869.01
		PROJECT LOCATION	Indian Point

GZA ENGINEER	Angela Hough	BORING COORDINATES	N 463075.3316	E	604604.6024
GZA ENGINEER	Sara Covelli	GROUND SURFACE EL.(FT)	15.021	DATUM	NGVD 29
GZA ENGINEER		TOP OF CASING EL.(FT)	14.962	DATE	1/4/07
		WELL DEPTH (FT)	40.50		
WELL DIAMETER	1 INCH	GROUND WATER DEPTH	8.8 FT		
NO. OF WELLS IN CLUSTER	4	(STATIC WATER LEVEL DEPTH)			

MEASUREMENTS TAKEN FROM:

- [ ] ground surface
- [x] top of casing

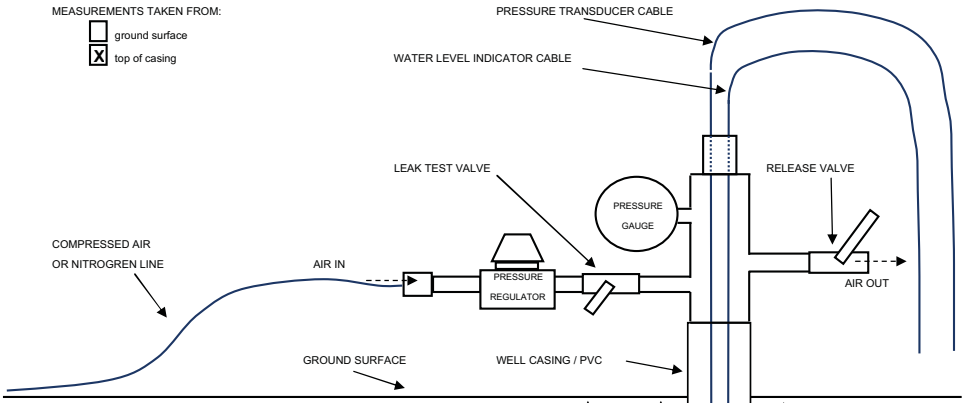

LEGEND:

DTB	DEPTH TO BOTTOM OF WELL FROM GROUND SURFACE	40.50	FT
DTS	DEPTH TO WELL SCREEN FROM GROUND SURFACE	38.50	FT
DTW	DEPTH TO STATIC WATER LEVEL FROM GROUND SURFACE	8.8	FT
WC	WATER COLUMN HEIGHT	31.70	FT
CH	CHANGE IN HEAD AFTER PRESSURIZATION	19.70	FT
AS	WATER COLUMN ABOVE SCREEN	29.70	FT

DTB	40.50	FT
− **DTW**	8.8	FT
= **WC**	31.70	FT
DTS	38.50	FT
− **DTW**	8.8	FT
= **AS**	29.70	FT
AS	29.70	FT
− SAFE MARGIN	10.00	FT
= **CH**	19.70	FT
CH	19.70	FT
+ **DTW**	8.8	FT
=WATER LEVEL INDICATOR DEPTH	28.50	FT
CH / 2.31 =	8.53	PSI
= PRESSURE APPLIED TO WELL HEAD		
DTW	8.8	FT
+ TRANSDUCER READING	25.364	FT
= TRANSDUCER DEPTH	34.16	FT

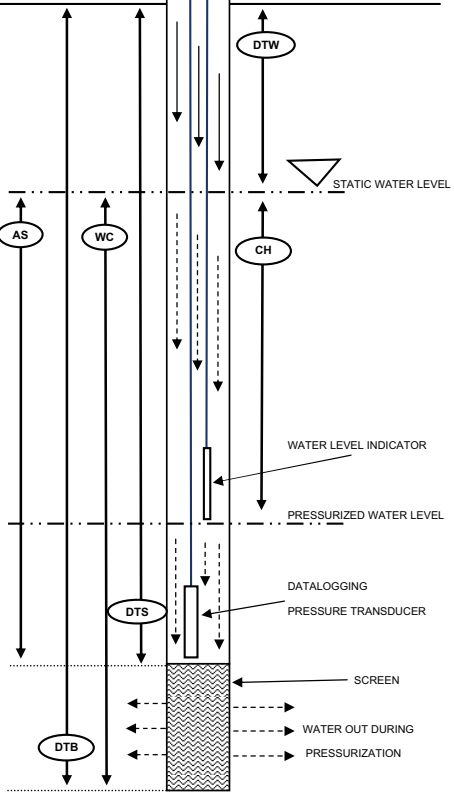

Time Test Start	8:47	
Transducer Reading at test start	25.280	FT
Time of Pressurization	8:48	
Time of Equilibrium	NA	
Equilibrium Transducer Reading	41.163 **	FT
Time of Pressure Release	9:33	
Time Test Stop	9:38	

NOTES:

** Test was aborted 45 minutes after pressurization due to extremely slow equilibration period.

PNEUMATIC SLUG TEST LOG

GZA GEOENVIRONMENTAL OF NEW YORK 440 NINTH AVENUE, 18th FLOOR NEW YORK, NEW YORK 10001 SCIENTISTS AND ENGINEERS	Client Entergy Indian Point Energy Center	WELL ID	MW - 37 - 57
		TEST NO.	1 of 2
		FILE NO.	41.0017869.01
		PROJECT LOCATION	Indian Point

GZA ENGINEER	Angela Hough	BORING COORDINATES	N 463075.1429	E	604604.7473
GZA ENGINEER	Sara Covelli	GROUND SURFACE EL.(FT)	15.021	DATUM	NGVD 29
GZA ENGINEER		TOP OF CASING EL.(FT)	14.788	DATE	1/3/07
		WELL DEPTH (FT)	57.00		
WELL DIAMETER	1 INCH	GROUND WATER DEPTH	8.9 FT		
NO. OF WELLS IN CLUSTER	4	(STATIC WATER LEVEL DEPTH)			

MEASUREMENTS TAKEN FROM:

- [ ] ground surface
- [x] top of casing

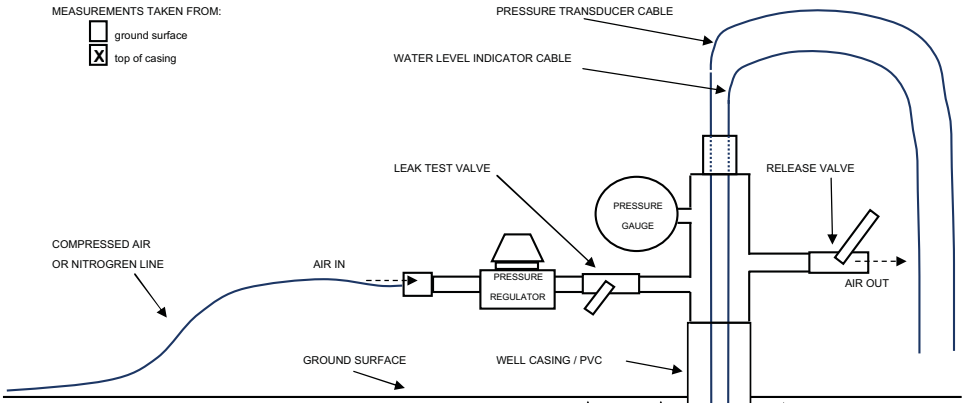

LEGEND:

DTB	DEPTH TO BOTTOM OF WELL FROM GROUND SURFACE	57.00	FT
DTS	DEPTH TO WELL SCREEN FROM GROUND SURFACE	52.00	FT
DTW	DEPTH TO STATIC WATER LEVEL FROM GROUND SURFACE	8.9	FT
WC	WATER COLUMN HEIGHT	48.10	FT
CH	CHANGE IN HEAD AFTER PRESSURIZATION	33.10	FT
AS	WATER COLUMN ABOVE SCREEN	43.10	FT

DTB	57.00	FT
− **DTW**	8.9	FT
= **WC**	48.10	FT
DTS	52.00	FT
− **DTW**	8.9	FT
= **AS**	43.10	FT
AS	43.10	FT
− SAFE MARGIN	10.00	FT
= **CH**	33.10	FT
CH	33.10	FT
+ **DTW**	8.9	FT
=WATER LEVEL INDICATOR DEPTH	42.00	FT
CH / 2.31 =	14.33	PSI
= PRESSURE APPLIED TO WELL HEAD		
DTW	8.9	FT
+ TRANSDUCER READING	36.217	FT
= TRANSDUCER DEPTH	45.12	FT

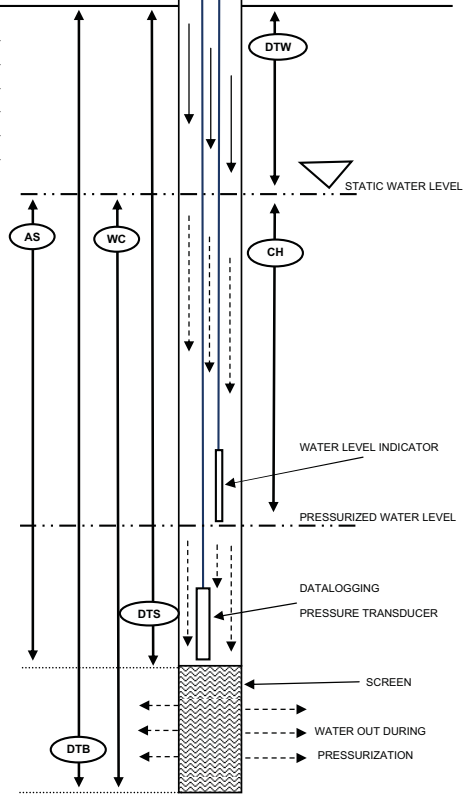

Time Test Start	9:10	
Transducer Reading at test start	36.256	FT
Time of Pressurization	9:10	
Time of Equilibrium	9:18	
Equilibrium Transducer Reading	36.262	FT
Time of Pressure Release	9:18	
Time Test Stop	9:23	

NOTES:

High connectivity observed between test well mw37-57 and adjacent well mw37-40 during pressurization periods.

PNEUMATIC SLUG TEST LOG

GZA GEOENVIRONMENTAL OF NEW YORK 440 NINTH AVENUE, 18th FLOOR NEW YORK, NEW YORK 10001 SCIENTISTS AND ENGINEERS	Client Entergy Indian Point Energy Center	WELL ID	MW - 37 - 57
		TEST NO.	2 of 2
		FILE NO.	41.0017869.01
		PROJECT LOCATION	Indian Point

GZA ENGINEER	Angela Hough	BORING COORDINATES	N 463075.1429	E	604604.7473
GZA ENGINEER	Sara Covelli	GROUND SURFACE EL.(FT)	15.021	DATUM	NGVD 29
GZA ENGINEER		TOP OF CASING EL.(FT)	14.788	DATE	1/3/07
		WELL DEPTH (FT)	57.00		
WELL DIAMETER	1 INCH	GROUND WATER DEPTH	8.9 FT		
NO. OF WELLS IN CLUSTER	2	(STATIC WATER LEVEL DEPTH)			

MEASUREMENTS TAKEN FROM:

- [ ] ground surface
- [x] top of casing

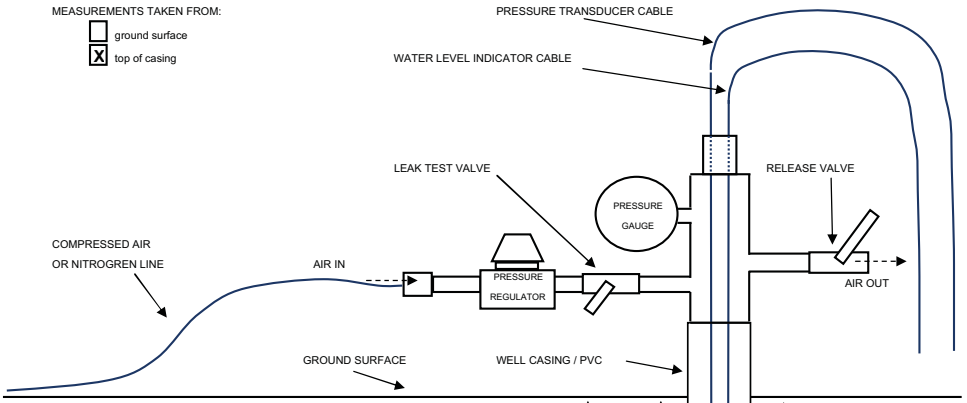

LEGEND:

DTB	DEPTH TO BOTTOM OF WELL FROM GROUND SURFACE	57.00	FT
DTS	DEPTH TO WELL SCREEN FROM GROUND SURFACE	52.00	FT
DTW	DEPTH TO STATIC WATER LEVEL FROM GROUND SURFACE	8.9	FT
WC	WATER COLUMN HEIGHT	48.10	FT
CH	CHANGE IN HEAD AFTER PRESSURIZATION	33.10	FT
AS	WATER COLUMN ABOVE SCREEN	43.10	FT

DTB	57.00	FT
− **DTW**	8.9	FT
= **WC**	48.10	FT
DTS	52.00	FT
− **DTW**	8.9	FT
= **AS**	43.10	FT
AS	43.10	FT
− SAFE MARGIN	10.00	FT
= **CH**	33.10	FT
CH	33.10	FT
+ **DTW**	8.9	FT
=WATER LEVEL INDICATOR DEPTH	42.00	FT
CH / 2.31 =	14.33	PSI
= PRESSURE APPLIED TO WELL HEAD		
DTW	8.9	FT
+ TRANSDUCER READING	36.217	FT
= TRANSDUCER DEPTH	45.12	FT

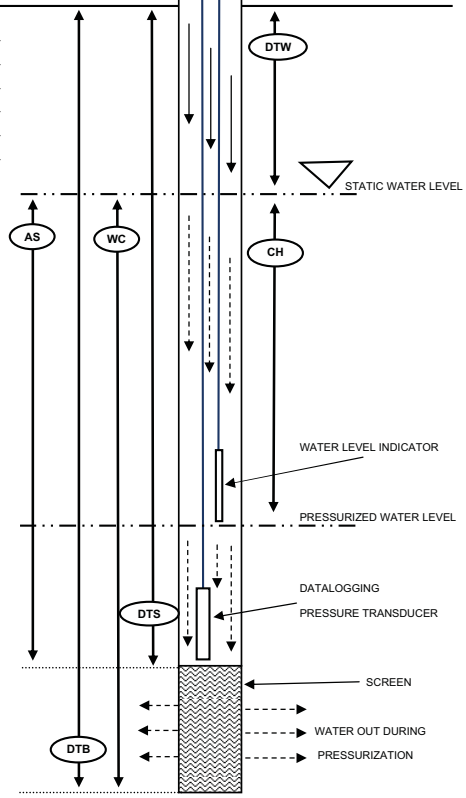

Time Test Start	9:23	
Transducer Reading at test start	36.232	FT
Time of Pressurization	9:24	
Time of Equilibrium	9:28	
Equilibrium Transducer Reading	36.310	FT
Time of Pressure Release	9:29	
Time Test Stop	9:34	

NOTES:

High connectivity observed between test well mw37-57 and adjacent well mw37-40 during pressurization periods. At 9:24 water was observed emerging from top of casing of mw37-40.

Throughout remainder of test, a few occasional bubbles were observed surfacing from bentonite within manhole.

PNEUMATIC SLUG TEST LOG

GZA GEOENVIRONMENTAL OF NEW YORK 440 NINTH AVENUE, 18th FLOOR NEW YORK, NEW YORK 10001 SCIENTISTS AND ENGINEERS	Client Entergy Indian Point Energy Center	WELL ID	MW - 44 - 104
		TEST NO.	1 of 2
		FILE NO.	41.0017869.01
		PROJECT LOCATION	Indian Point

GZA ENGINEER	Angela Hough	BORING COORDINATES	N 462499.9388	E	604516.2129
GZA ENGINEER	Sara Covelli	GROUND SURFACE EL.(FT)	93.52	DATUM	NGVD 29
GZA ENGINEER		TOP OF CASING EL.(FT)	93.09	DATE	5/8/07
		WELL DEPTH (FT)	104.00		
WELL DIAMETER	1 INCH	GROUND WATER DEPTH	67.78 FT		
NO. OF WELLS IN CLUSTER	2	(STATIC WATER LEVEL DEPTH)			

MEASUREMENTS TAKEN FROM:

- [ ] ground surface
- [x] top of casing

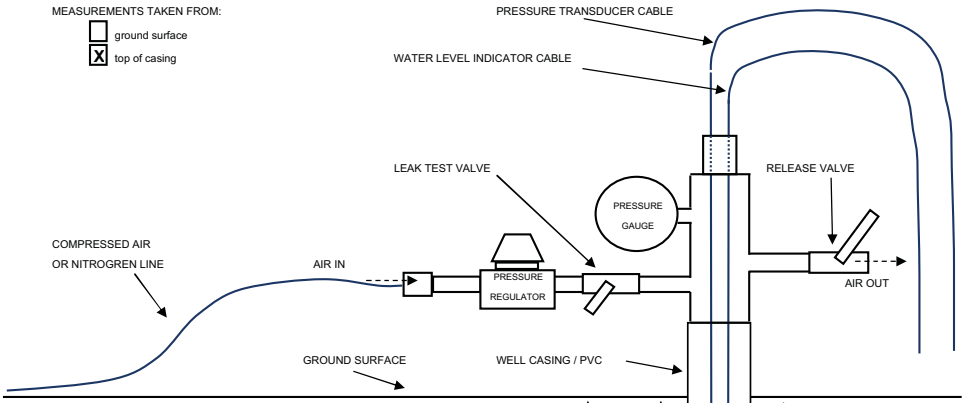

LEGEND:

DTB	DEPTH TO BOTTOM OF WELL FROM GROUND SURFACE	104.00	FT
DTS	DEPTH TO WELL SCREEN FROM GROUND SURFACE	79.00	FT
DTW	DEPTH TO STATIC WATER LEVEL FROM GROUND SURFACE	67.78	FT
WC	WATER COLUMN HEIGHT	36.22	FT
CH	CHANGE IN HEAD AFTER PRESSURIZATION	8.22	FT
AS	WATER COLUMN ABOVE SCREEN	11.22	FT

DTB	104.00	FT
− **DTW**	67.78	FT
= **WC**	36.22	FT
DTS	79.00	FT
− **DTW**	67.78	FT
= **AS**	11.22	FT
AS	11.22	FT
− SAFE MARGIN	3.00	FT
= **CH**	8.22	FT
CH	8.22	FT
+ **DTW**	67.78	FT
=WATER LEVEL INDICATOR DEPTH	76.00	FT
CH / 2.31 =	3.56	PSI
= PRESSURE APPLIED TO WELL HEAD		
DTW**	67.78	FT
+ TRANSDUCER READING	27.399	FT
= TRANSDUCER DEPTH	95.18	FT

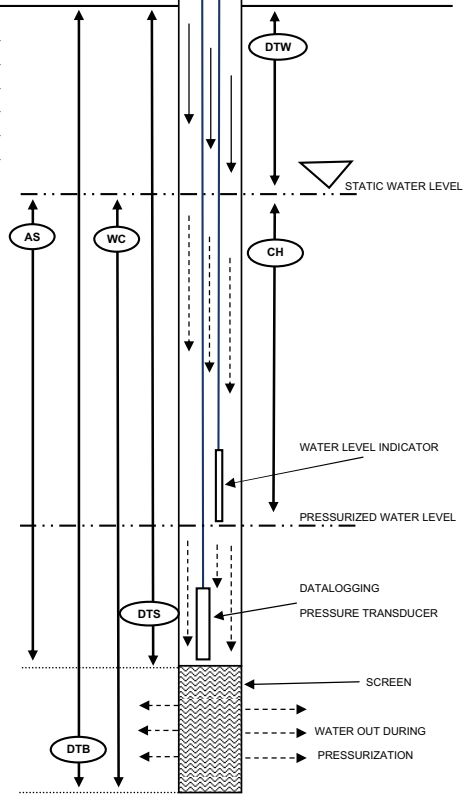

Time Test Start	8:49	
Transducer Reading at test start	27.399	FT
Time of Pressurization	8:49	
Time of Equilibrium	9:26	
Equilibrium Transducer Reading	0.431	FT
Time of Pressure Release	9:26	
Time Test Stop	10:21	

NOTES:

Small air leak during test.

PNEUMATIC SLUG TEST LOG

GZA GEOENVIRONMENTAL OF NEW YORK 440 NINTH AVENUE, 18th FLOOR NEW YORK, NEW YORK 10001 SCIENTISTS AND ENGINEERS	Client Entergy Indian Point Energy Center	WELL ID	MW - 44 - 104
		TEST NO.	2 of 2
		FILE NO.	41.0017869.01
		PROJECT LOCATION	Indian Point

GZA ENGINEER	Angela Hough	BORING COORDINATES	N 462499.9388	E	604516.2129
GZA ENGINEER	Sara Covelli	GROUND SURFACE EL.(FT)	93.52	DATUM	NGVD 29
GZA ENGINEER		TOP OF CASING EL.(FT)	93.09	DATE	5/8/07
		WELL DEPTH (FT)	104.00		
WELL DIAMETER	1 INCH	GROUND WATER DEPTH	67.78 FT		
NO. OF WELLS IN CLUSTER	2	(STATIC WATER LEVEL DEPTH)			

MEASUREMENTS TAKEN FROM:

- [ ] ground surface
- [x] top of casing

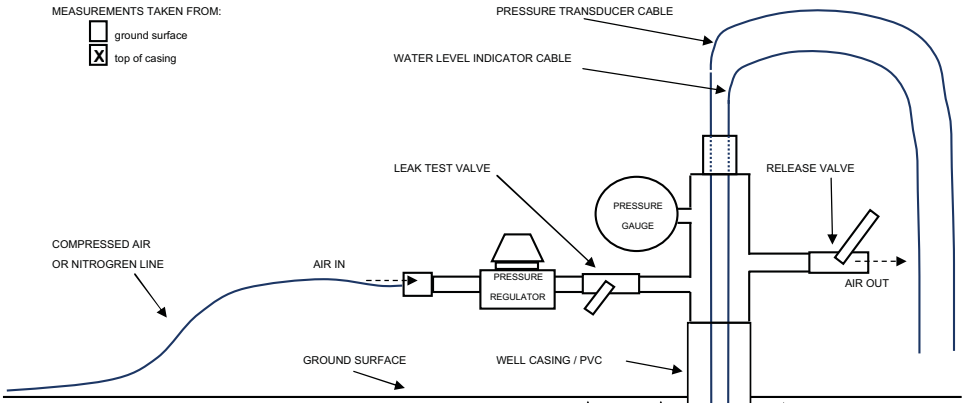

LEGEND:

DTB	DEPTH TO BOTTOM OF WELL FROM GROUND SURFACE	104.00	FT
DTS	DEPTH TO WELL SCREEN FROM GROUND SURFACE	79.00	FT
DTW	DEPTH TO STATIC WATER LEVEL FROM GROUND SURFACE	67.78	FT
WC	WATER COLUMN HEIGHT	36.22	FT
CH	CHANGE IN HEAD AFTER PRESSURIZATION	8.22	FT
AS	WATER COLUMN ABOVE SCREEN	11.22	FT

DTB	104.00	FT
− **DTW**	67.78	FT
= **WC**	36.22	FT
DTS	79.00	FT
− **DTW**	67.78	FT
= **AS**	11.22	FT
AS	11.22	FT
− SAFE MARGIN	3.00	FT
= **CH**	8.22	FT
CH	8.22	FT
+ **DTW**	67.78	FT
=WATER LEVEL INDICATOR DEPTH	76.00	FT
CH / 2.31 =	3.56	PSI
= PRESSURE APPLIED TO WELL HEAD		
DTW**	67.78	FT
+ TRANSDUCER READING	27.399	FT
= TRANSDUCER DEPTH	95.18	FT

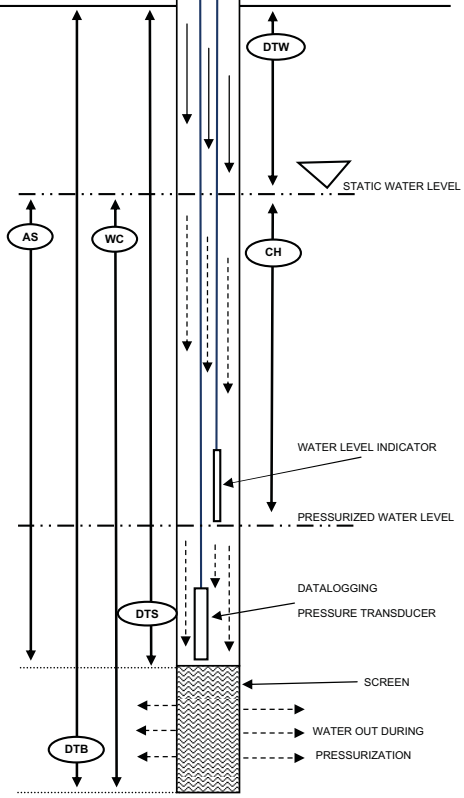

Time Test Start	10:21	
Transducer Reading at test start	26.750	FT
Time of Pressurization	10:21	
Time of Equilibrium	10:56	
Equilibrium Transducer Reading	27.390	FT
Time of Pressure Release	10:56	
Time Test Stop	12:06	

NOTES:

Small air leak during test.

PNEUMATIC SLUG TEST LOG

GZA GEOENVIRONMENTAL OF NEW YORK 440 NINTH AVENUE, 18th FLOOR NEW YORK, NEW YORK 10001 SCIENTISTS AND ENGINEERS	Client Entergy Indian Point Energy Center	WELL ID	MW -45 - 62
		TEST NO.	1 of 2
		FILE NO.	41.0017869.01
		PROJECT LOCATION	Indian Point

GZA ENGINEER	Angela Hough	BORING COORDINATES	N 462385.5685	E	604472.1201
GZA ENGINEER	Sara Covelli	GROUND SURFACE EL.(FT)	53.662	DATUM	NGVD 29
GZA ENGINEER		TOP OF CASING EL.(FT)	53.217	DATE	5/7/07
		WELL DEPTH (FT)	61.50		
WELL DIAMETER	1 INCH	GROUND WATER DEPTH	24.01 FT		
NO. OF WELLS IN CLUSTER	2	(STATIC WATER LEVEL DEPTH)			

MEASUREMENTS TAKEN FROM:

- [ ] ground surface
- [x] top of casing

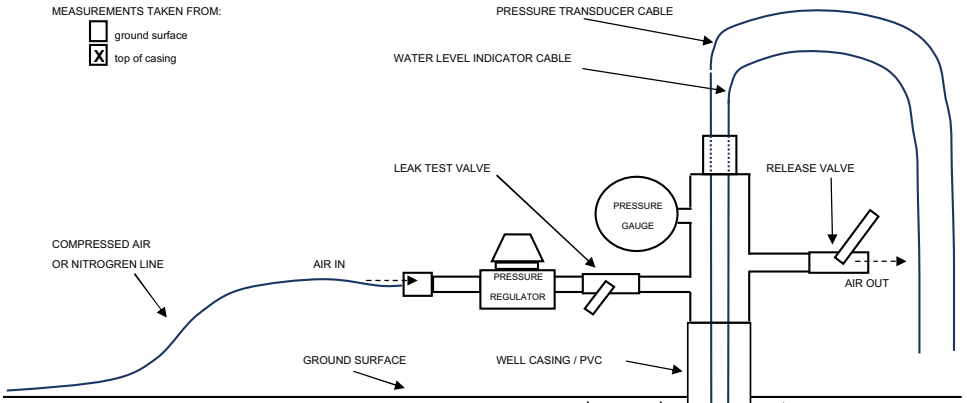

LEGEND:

DTB	DEPTH TO BOTTOM OF WELL FROM GROUND SURFACE	61.50	FT
DTS	DEPTH TO WELL SCREEN FROM GROUND SURFACE	51.50	FT
DTW	DEPTH TO STATIC WATER LEVEL FROM GROUND SURFACE	24.01	FT
WC	WATER COLUMN HEIGHT	37.49	FT
CH	CHANGE IN HEAD AFTER PRESSURIZATION	17.49	FT
AS	WATER COLUMN ABOVE SCREEN	27.49	FT

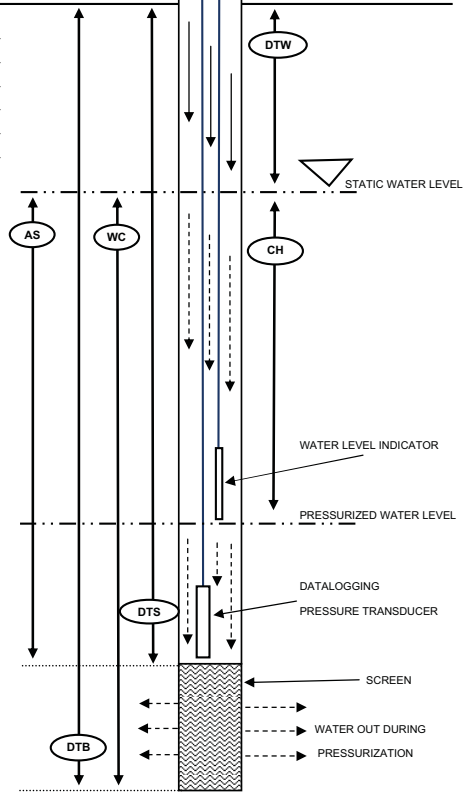

DTB	61.50	FT
− **DTW**	24.01	FT
= **WC**	37.49	FT
DTS	51.50	FT
− **DTW**	24.01	FT
= **AS**	27.49	FT
AS	27.49	FT
− SAFE MARGIN	10.00	FT
= **CH**	17.49	FT
CH	17.49	FT
+ **DTW**	24.01	FT
=WATER LEVEL INDICATOR DEPTH	41.50	FT
CH / 2.31 =	7.57	PSI
= PRESSURE APPLIED TO WELL HEAD		
DTW**	24.46	FT
+ TRANSDUCER READING	36.716	FT
= TRANSDUCER DEPTH	61.18	FT

Time Test Start	10:12			
Transducer Reading at test start	36.718	FT		
Time of Pressurization	10:12		Time of Pressure Release	10:30
Time of Equilibrium	10:30		Time Test Stop	11:14
Equilibrium Transducer Reading	36.990	FT		

NOTES:

9:15 false start

Small air leak during test.

PNEUMATIC SLUG TEST LOG

GZA GEOENVIRONMENTAL OF NEW YORK 440 NINTH AVENUE, 18th FLOOR NEW YORK, NEW YORK 10001 SCIENTISTS AND ENGINEERS	Client Entergy Indian Point Energy Center	WELL ID	MW -45 - 62
		TEST NO.	2 of 2
		FILE NO.	41.0017869.01
		PROJECT LOCATION	Indian Point

GZA ENGINEER	Angela Hough	BORING COORDINATES	N 462385.5685	E	604472.1201
GZA ENGINEER	Sara Covelli	GROUND SURFACE EL.(FT)	53.662	DATUM	NGVD 29
GZA ENGINEER		TOP OF CASING EL.(FT)	53.217	DATE	5/7/07
		WELL DEPTH (FT)	61.50		
WELL DIAMETER	1 INCH	GROUND WATER DEPTH	24.01 FT		
NO. OF WELLS IN CLUSTER	2	(STATIC WATER LEVEL DEPTH)			

MEASUREMENTS TAKEN FROM:

- [ ] ground surface
- [x] top of casing

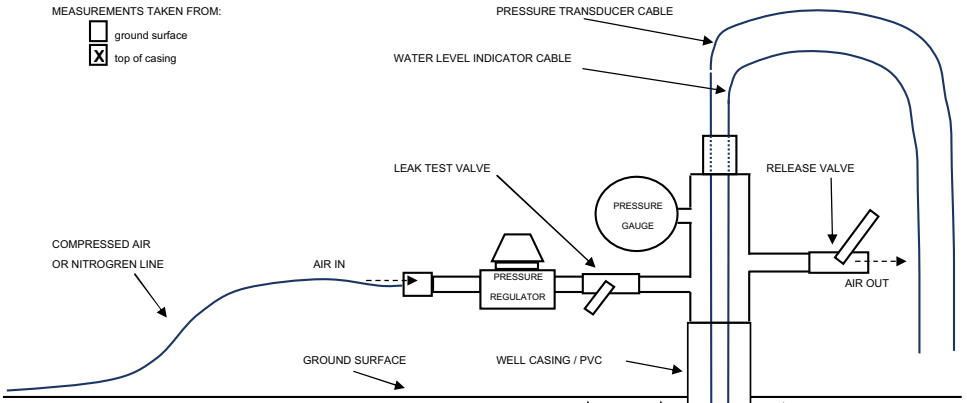

LEGEND:

DTB	DEPTH TO BOTTOM OF WELL FROM GROUND SURFACE	61.50	FT
DTS	DEPTH TO WELL SCREEN FROM GROUND SURFACE	51.50	FT
DTW	DEPTH TO STATIC WATER LEVEL FROM GROUND SURFACE	24.01	FT
WC	WATER COLUMN HEIGHT	37.49	FT
CH	CHANGE IN HEAD AFTER PRESSURIZATION	17.49	FT
AS	WATER COLUMN ABOVE SCREEN	27.49	FT

DTB	61.50	FT
− **DTW**	24.01	FT
= **WC**	37.49	FT
DTS	51.50	FT
− **DTW**	24.01	FT
= **AS**	27.49	FT
AS	27.49	FT
− SAFE MARGIN	10.00	FT
= **CH**	17.49	FT
CH	17.49	FT
+ **DTW**	24.01	FT
=WATER LEVEL INDICATOR DEPTH	41.50	FT
CH / 2.31 =	7.57	PSI
= PRESSURE APPLIED TO WELL HEAD		
DTW**	24.46	FT
+ TRANSDUCER READING	36.716	FT
= TRANSDUCER DEPTH	61.18	FT

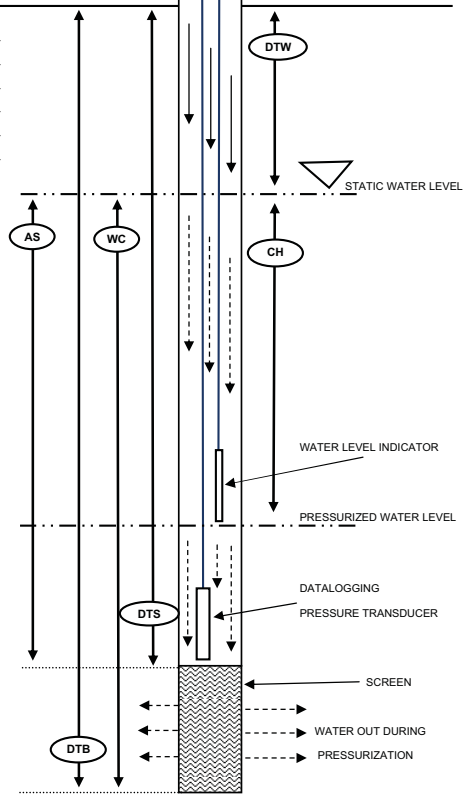

Time Test Start	11:15	
Transducer Reading at test start	36.718	FT
Time of Pressurization	11:15	
Time of Equilibrium	11:33	
Equilibrium Transducer Reading	36.821	FT
Time of Pressure Release	11:33	
Time Test Stop	12:50	

NOTES:

Small air leak during test.

PNEUMATIC SLUG TEST LOG

GZA GEOENVIRONMENTAL OF NEW YORK 440 NINTH AVENUE, 18th FLOOR NEW YORK, NEW YORK 10001 SCIENTISTS AND ENGINEERS	Client Entergy Indian Point Energy Center	WELL ID	MW - 48 - 38
		TEST NO.	1 of 1
		FILE NO.	41.0017869.10
		PROJECT LOCATION	Indian Point

GZA ENGINEER	Angela Hough	BORING COORDINATES	N 462015.6992	E	603473.8128
GZA ENGINEER		GROUND SURFACE EL.(FT)	15.387	DATUM	NGVD 29
GZA ENGINEER		TOP OF CASING EL.(FT)	15.189	DATE	5/25/07
		WELL DEPTH (FT)	37.45		
WELL DIAMETER	1 INCH	GROUND WATER DEPTH	14.64 FT		
NO. OF WELLS IN CLUSTER	2	(STATIC WATER LEVEL DEPTH)			

MEASUREMENTS TAKEN FROM:

- [ ] ground surface
- [x] top of casing

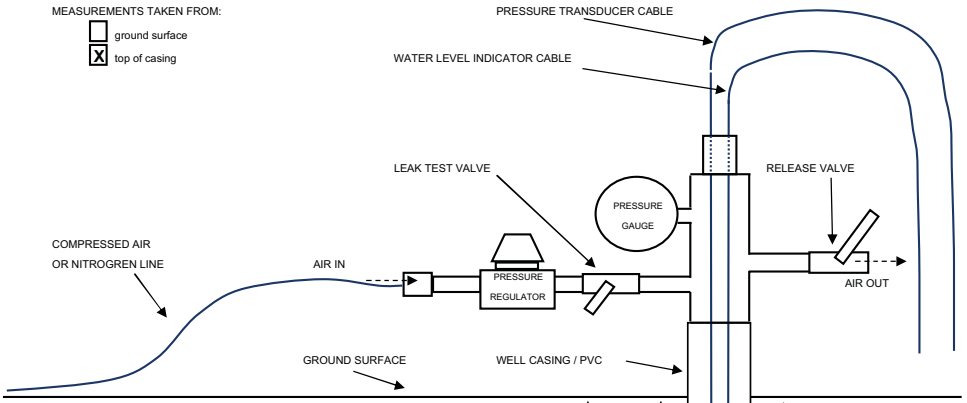

LEGEND:

DTB	DEPTH TO BOTTOM OF WELL FROM GROUND SURFACE	38.00	FT
DTS	DEPTH TO WELL SCREEN FROM GROUND SURFACE	32.45	FT
DTW	DEPTH TO STATIC WATER LEVEL FROM GROUND SURFACE	14.64	FT
WC	WATER COLUMN HEIGHT	23.36	FT
CH	CHANGE IN HEAD AFTER PRESSURIZATION	10.81	FT
AS	WATER COLUMN ABOVE SCREEN	17.81	FT

DTB	38.00	FT
− **DTW**	14.64	FT
= **WC**	23.36	FT
DTS	32.45	FT
− **DTW**	14.64	FT
= **AS**	17.81	FT
AS	17.81	FT
− SAFE MARGIN	7.00	FT
= **CH**	10.81	FT
CH	10.81	FT
+ **DTW**	14.64	FT
=WATER LEVEL INDICATOR DEPTH	25.45	FT
CH / 2.31 =	4.68	PSI
= PRESSURE APPLIED TO WELL HEAD		
DTW**	13.51	FT
+ TRANSDUCER READING	24.641	FT
= TRANSDUCER DEPTH	38.15	FT

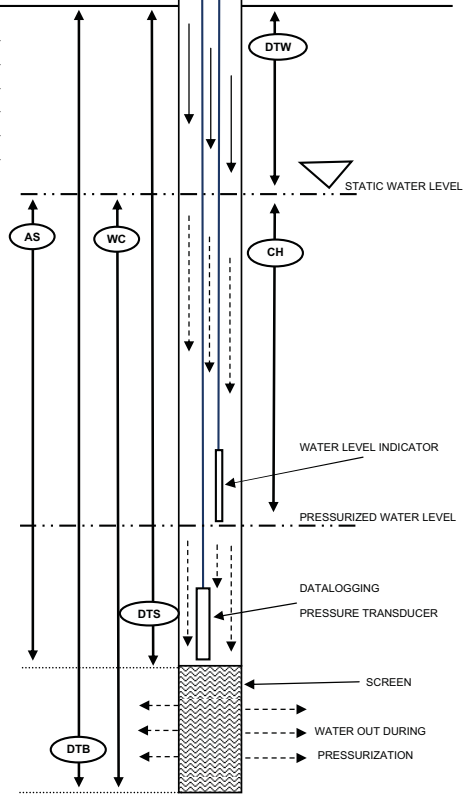

Time Test Start	11:12	
Transducer Reading at test start	21.706	FT
Time of Pressurization	11:15	
Time of Equilibrium	11:17	
Equilibrium Transducer Reading	21.706	FT
Time of Pressure Release	11:18	
Time Test Stop	11:20	

NOTES:

Small air leak during the test.

PNEUMATIC SLUG TEST LOG

GZA GEOENVIRONMENTAL OF NEW YORK 440 NINTH AVENUE, 18th FLOOR NEW YORK, NEW YORK 10001 SCIENTISTS AND ENGINEERS	Client Entergy Indian Point Energy Center	WELL ID	MW - 48 - 38
		TEST NO.	1 of 1
		FILE NO.	41.0017869.10
		PROJECT LOCATION	Indian Point

GZA ENGINEER	Angela Hough	BORING COORDINATES	N 462015.6992	E	603473.8128
GZA ENGINEER		GROUND SURFACE EL.(FT)	15.387	DATUM	NGVD 29
GZA ENGINEER		TOP OF CASING EL.(FT)	15.189	DATE	5/25/07
		WELL DEPTH (FT)	37.45		
WELL DIAMETER	1 INCH	GROUND WATER DEPTH	14.64 FT		
NO. OF WELLS IN CLUSTER	2	(STATIC WATER LEVEL DEPTH)			

MEASUREMENTS TAKEN FROM:

- [ ] ground surface
- [x] top of casing

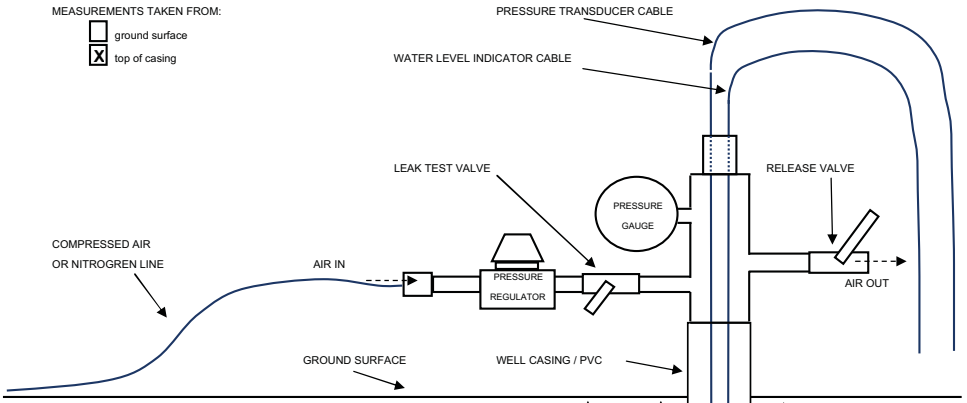

LEGEND:

DTB	DEPTH TO BOTTOM OF WELL FROM GROUND SURFACE	38.00	FT
DTS	DEPTH TO WELL SCREEN FROM GROUND SURFACE	32.45	FT
DTW	DEPTH TO STATIC WATER LEVEL FROM GROUND SURFACE	14.64	FT
WC	WATER COLUMN HEIGHT	23.36	FT
CH	CHANGE IN HEAD AFTER PRESSURIZATION	10.81	FT
AS	WATER COLUMN ABOVE SCREEN	17.81	FT

DTB	38.00	FT
− **DTW**	14.64	FT
= **WC**	23.36	FT
DTS	32.45	FT
− **DTW**	14.64	FT
= **AS**	17.81	FT
AS	17.81	FT
− SAFE MARGIN	7.00	FT
= **CH**	10.81	FT
CH	10.81	FT
+ **DTW**	14.64	FT
=WATER LEVEL INDICATOR DEPTH	25.45	FT
CH / 2.31 =	4.68	PSI
= PRESSURE APPLIED TO WELL HEAD		
DTW**	13.51	FT
+ TRANSDUCER READING	24.641	FT
= TRANSDUCER DEPTH	38.15	FT

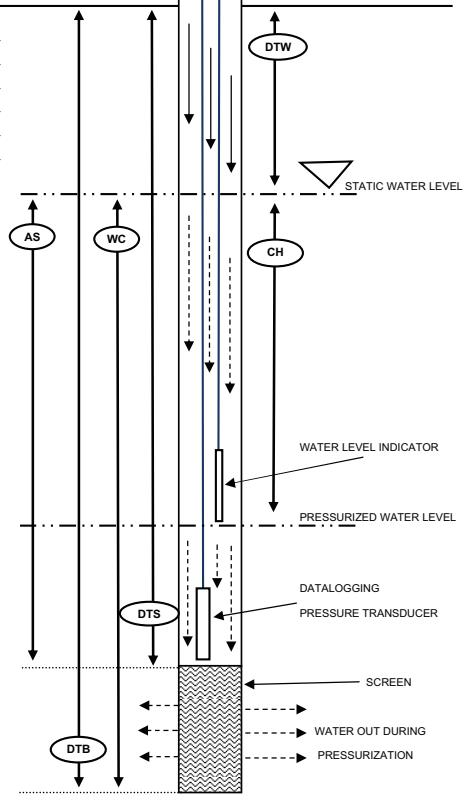

Time Test Start	11:20	
Transducer Reading at test start	21.699	FT
Time of Pressurization	11:21	
Time of Equilibrium	11:24	
Equilibrium Transducer Reading	21.695	FT
Time of Pressure Release	11:24	
Time Test Stop	11:28	

NOTES:

Small air leak during the test.

PNEUMATIC SLUG TEST LOG

GZA GEOENVIRONMENTAL OF NEW YORK 440 NINTH AVENUE, 18th FLOOR NEW YORK, NEW YORK 10001 SCIENTISTS AND ENGINEERS	Client Entergy Indian Point Energy Center	WELL ID	MW - 48 - 38
		TEST NO.	1 of 1
		FILE NO.	41.0017869.10
		PROJECT LOCATION	Indian Point

GZA ENGINEER	Angela Hough	BORING COORDINATES	N 462015.6992	E	603473.8128
GZA ENGINEER		GROUND SURFACE EL.(FT)	15.387	DATUM	NGVD 29
GZA ENGINEER		TOP OF CASING EL.(FT)	15.189	DATE	5/25/07
		WELL DEPTH (FT)	37.45		
WELL DIAMETER	1 INCH	GROUND WATER DEPTH	14.64 FT		
NO. OF WELLS IN CLUSTER	2	(STATIC WATER LEVEL DEPTH)			

MEASUREMENTS TAKEN FROM:

- [ ] ground surface
- [x] top of casing

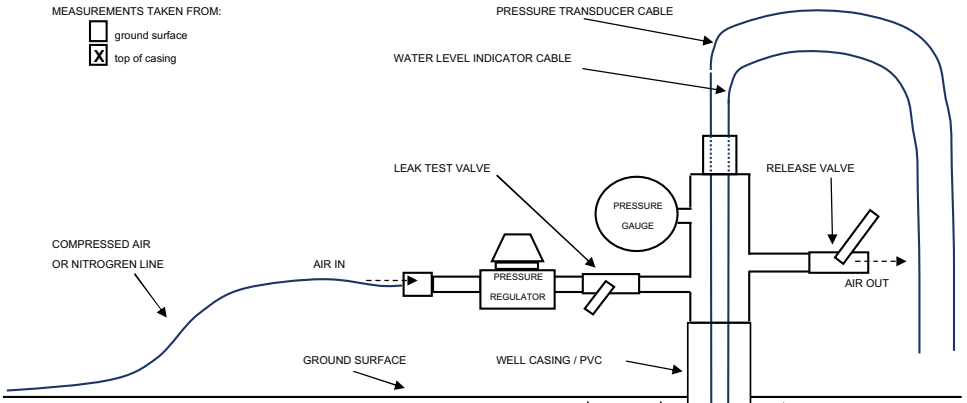

LEGEND:

DTB	DEPTH TO BOTTOM OF WELL FROM GROUND SURFACE	38.00	FT
DTS	DEPTH TO WELL SCREEN FROM GROUND SURFACE	32.45	FT
DTW	DEPTH TO STATIC WATER LEVEL FROM GROUND SURFACE	14.64	FT
WC	WATER COLUMN HEIGHT	23.36	FT
CH	CHANGE IN HEAD AFTER PRESSURIZATION	10.81	FT
AS	WATER COLUMN ABOVE SCREEN	17.81	FT

DTB	38.00	FT
− **DTW**	14.64	FT
= **WC**	23.36	FT
DTS	32.45	FT
− **DTW**	14.64	FT
= **AS**	17.81	FT
AS	17.81	FT
− SAFE MARGIN	7.00	FT
= **CH**	10.81	FT
CH	10.81	FT
+ **DTW**	14.64	FT
=WATER LEVEL INDICATOR DEPTH	25.45	FT
CH / 2.31 =	4.68	PSI
= PRESSURE APPLIED TO WELL HEAD		
DTW**	13.51	FT
+ TRANSDUCER READING	24.641	FT
= TRANSDUCER DEPTH	38.15	FT

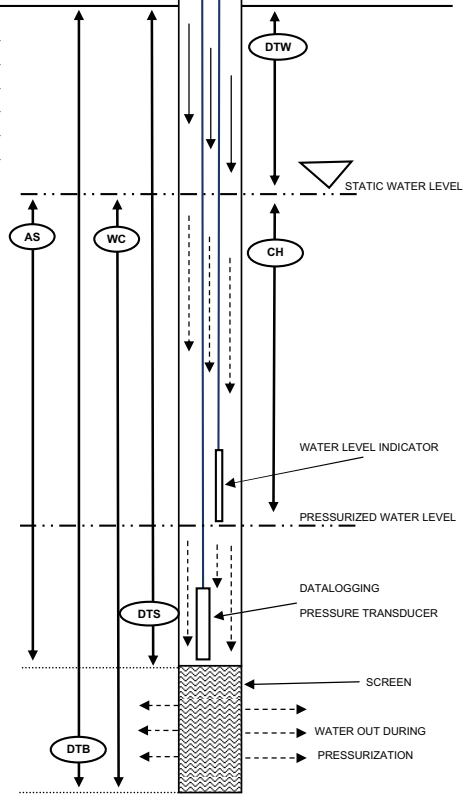

Time Test Start	11:28	
Transducer Reading at test start	21.692	FT
Time of Pressurization	11:29	
Time of Equilibrium	11:31	
Equilibrium Transducer Reading	21.703	FT
Time of Pressure Release	11:31	
Time Test Stop	11:36	

NOTES:

Small air leak during the test.

PNEUMATIC SLUG TEST LOG

GZA GEOENVIRONMENTAL OF NEW YORK 440 NINTH AVENUE, 18th FLOOR NEW YORK, NEW YORK 10001 SCIENTISTS AND ENGINEERS	Client Entergy Indian Point Energy Center	WELL ID	MW - 49 - 42
		TEST NO.	1 of 2
		FILE NO.	41.0017869.01
		PROJECT LOCATION	Indian Point

GZA ENGINEER	Angela Hough	BORING COORDINATES	N 463078.8328	E	604446.6184
GZA ENGINEER	Sara Covelli	GROUND SURFACE EL.(FT)	14.628	DATUM	NGVD 29
GZA ENGINEER		TOP OF CASING EL.(FT)	14.223	DATE	5/9/07
		WELL DEPTH (FT)	42.00		
WELL DIAMETER	2 INCH	GROUND WATER DEPTH	13.01 FT		
NO. OF WELLS IN CLUSTER	2*	(STATIC WATER LEVEL DEPTH)			

MEASUREMENTS TAKEN FROM:

- [ ] ground surface
- [x] top of casing

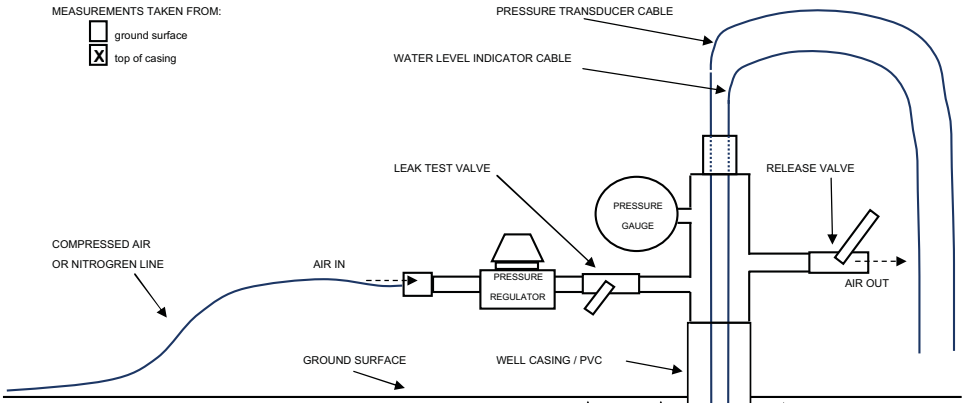

LEGEND:

DTB	DEPTH TO BOTTOM OF WELL FROM GROUND SURFACE	42.00	FT
DTS	DEPTH TO WELL SCREEN FROM GROUND SURFACE	32.00	FT
DTW	DEPTH TO STATIC WATER LEVEL FROM GROUND SURFACE	13.01	FT
WC	WATER COLUMN HEIGHT	28.99	FT
CH	CHANGE IN HEAD AFTER PRESSURIZATION	8.99	FT
AS	WATER COLUMN ABOVE SCREEN	18.99	FT

DTB	42.00	FT
− **DTW**	13.01	FT
= **WC**	28.99	FT
DTS	32.00	FT
− **DTW**	13.01	FT
= **AS**	18.99	FT
AS	18.99	FT
− SAFE MARGIN	10.00	FT
= **CH**	8.99	FT
CH	8.99	FT
+ **DTW**	13.01	FT
=WATER LEVEL INDICATOR DEPTH	22.00	FT
CH / 2.31 =	3.89	PSI
= PRESSURE APPLIED TO WELL HEAD		
DTW**	13.01	FT
+ TRANSDUCER READING	28.449	FT
= TRANSDUCER DEPTH	41.46	FT

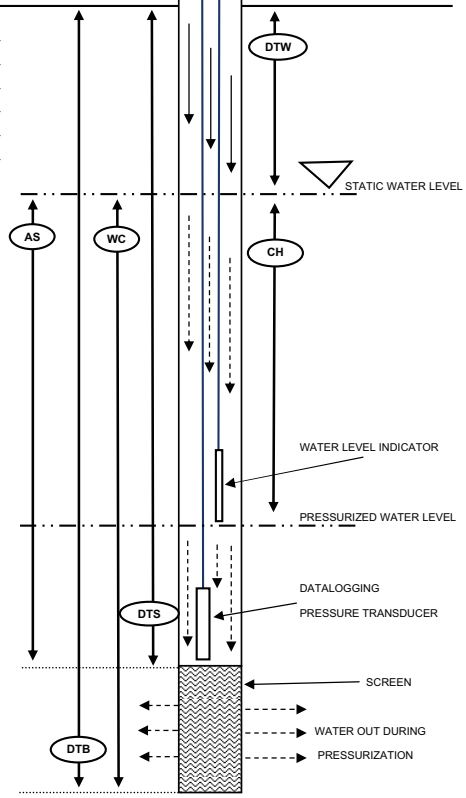

Time Test Start	8:36	
Transducer Reading at test start	28.506	FT
Time of Pressurization	8:43	
Time of Equilibrium	8:50	
Equilibrium Transducer Reading	28.507	FT
Time of Pressure Release	8:50	
Time Test Stop	8:56	

NOTES:

* Two wells in borehole, three wells in cluster
8:37 false start
Small air leak during test

PNEUMATIC SLUG TEST LOG

GZA GEOENVIRONMENTAL OF NEW YORK 440 NINTH AVENUE, 18th FLOOR NEW YORK, NEW YORK 10001 SCIENTISTS AND ENGINEERS	Client Entergy Indian Point Energy Center	WELL ID	MW - 49 - 42
		TEST NO.	1 of 2
		FILE NO.	41.0017869.01
		PROJECT LOCATION	Indian Point

GZA ENGINEER	Angela Hough	BORING COORDINATES	N 463078.8328	E 604446.6184	
GZA ENGINEER	Sara Covelli	GROUND SURFACE EL.(FT)	14.628	DATUM	NGVD 29
GZA ENGINEER		TOP OF CASING EL.(FT)	14.223	DATE	5/9/07
		WELL DEPTH (FT)	42.00		
WELL DIAMETER	2 INCH	GROUND WATER DEPTH	13.01 FT		
NO. OF WELLS IN CLUSTER	2*	(STATIC WATER LEVEL DEPTH)			

MEASUREMENTS TAKEN FROM:

- [ ] ground surface
- [x] top of casing

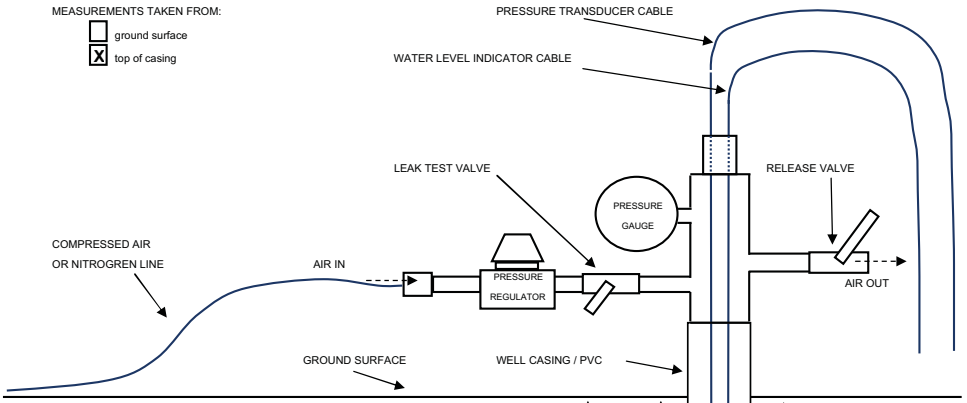

LEGEND:

DTB	DEPTH TO BOTTOM OF WELL FROM GROUND SURFACE	42.00	FT
DTS	DEPTH TO WELL SCREEN FROM GROUND SURFACE	32.00	FT
DTW	DEPTH TO STATIC WATER LEVEL FROM GROUND SURFACE	13.01	FT
WC	WATER COLUMN HEIGHT	28.99	FT
CH	CHANGE IN HEAD AFTER PRESSURIZATION	8.99	FT
AS	WATER COLUMN ABOVE SCREEN	18.99	FT

DTB	42.00	FT
− **DTW**	13.01	FT
= **WC**	28.99	FT
DTS	32.00	FT
− **DTW**	13.01	FT
= **AS**	18.99	FT
AS	18.99	FT
− SAFE MARGIN	10.00	FT
= **CH**	8.99	FT
CH	8.99	FT
+ **DTW**	13.01	FT
=WATER LEVEL INDICATOR DEPTH	22.00	FT
CH / 2.31 =	3.89	PSI
= PRESSURE APPLIED TO WELL HEAD		
DTW**	13.01	FT
+ TRANSDUCER READING	28.449	FT
= TRANSDUCER DEPTH	41.46	FT

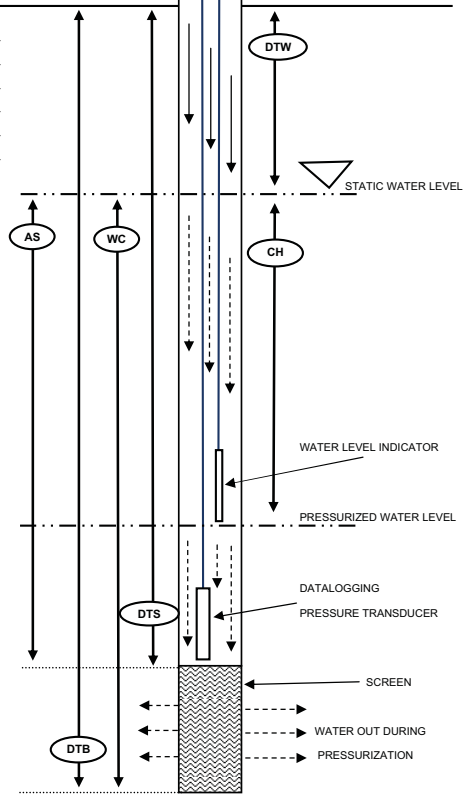

Time Test Start	8:57		
Transducer Reading at test start	28.466	FT	
Time of Pressurization	8:57	Time of Pressure Release	9:02
Time of Equilibrium	9:02	Time Test Stop	9:09
Equilibrium Transducer Reading	28.445	FT	

NOTES:

* Two wells in borehole, three wells in cluster

PNEUMATIC SLUG TEST LOG

GZA GEOENVIRONMENTAL OF NEW YORK 440 NINTH AVENUE, 18th FLOOR NEW YORK, NEW YORK 10001 SCIENTISTS AND ENGINEERS	Client Entergy Indian Point Energy Center	WELL ID	MW - 49 - 65
		TEST NO.	1 of 2
		FILE NO.	41.0017869.01
		PROJECT LOCATION	Indian Point

GZA ENGINEER	Angela Hough	BORING COORDINATES	N 463078.9738	E	604446.3875
GZA ENGINEER	Sara Covelli	GROUND SURFACE EL.(FT)	14.628	DATUM	NGVD 29
GZA ENGINEER	Miguel Britos	TOP OF CASING EL.(FT)	14.457	DATE	5/4/07
		WELL DEPTH (FT)	65.00		
WELL DIAMETER	1 INCH	GROUND WATER DEPTH	12.68 FT		
NO. OF WELLS IN CLUSTER	2*	(STATIC WATER LEVEL DEPTH)			

MEASUREMENTS TAKEN FROM:

- [ ] ground surface
- [x] top of casing

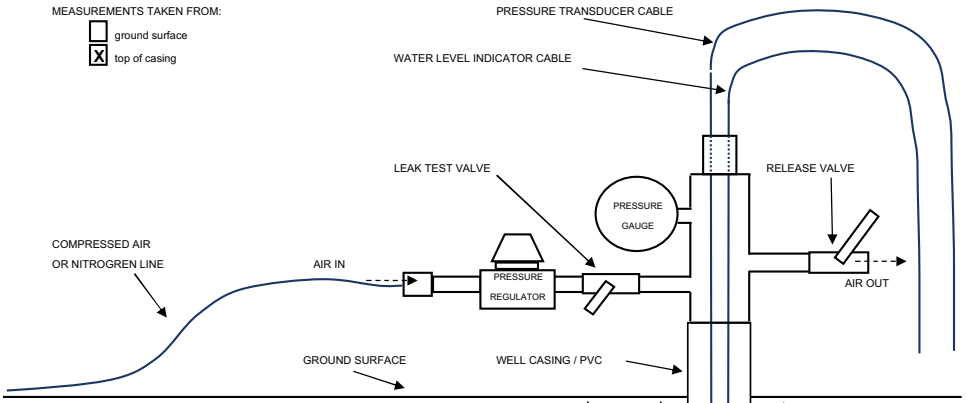

LEGEND:

DTB	DEPTH TO BOTTOM OF WELL FROM GROUND SURFACE	65.00	FT
DTS	DEPTH TO WELL SCREEN FROM GROUND SURFACE	60.00	FT
DTW	DEPTH TO STATIC WATER LEVEL FROM GROUND SURFACE	12.68	FT
WC	WATER COLUMN HEIGHT	52.32	FT
CH	CHANGE IN HEAD AFTER PRESSURIZATION	37.32	FT
AS	WATER COLUMN ABOVE SCREEN	47.32	FT

DTB	65.00	FT
− **DTW**	12.68	FT
= **WC**	52.32	FT
DTS	60.00	FT
− **DTW**	12.68	FT
= **AS**	47.32	FT
AS	47.32	FT
− SAFE MARGIN	10.00	FT
= **CH**	37.32	FT
CH	37.32	FT
+ **DTW**	12.68	FT
=WATER LEVEL INDICATOR DEPTH	50.00	FT
CH / 2.31 =	16.16	PSI
= PRESSURE APPLIED TO WELL HEAD		
DTW**	12.68	FT
+ TRANSDUCER READING	52.310	FT
= TRANSDUCER DEPTH	64.99	FT

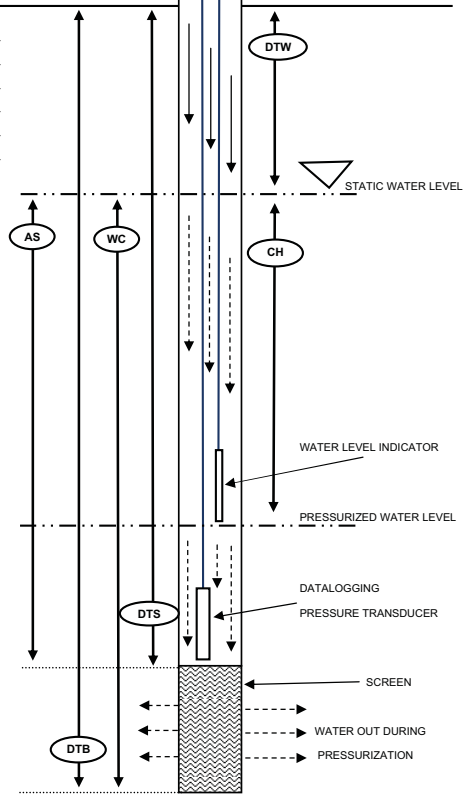

Time Test Start	14:32	
Transducer Reading at test start	52.270	FT
Time of Pressurization	14:32	
Time of Equilibrium	14:41	
Equilibrium Transducer Reading	52.300	FT
Time of Pressure Release	14:41	
Time Test Stop	14:47	

NOTES:

* Two wells in borehole, three wells in cluster

PNEUMATIC SLUG TEST LOG

GZA GEOENVIRONMENTAL OF NEW YORK 440 NINTH AVENUE, 18th FLOOR NEW YORK, NEW YORK 10001 SCIENTISTS AND ENGINEERS	Client Entergy Indian Point Energy Center	WELL ID	MW - 49 - 65
		TEST NO.	2 of 2
		FILE NO.	41.0017869.01
		PROJECT LOCATION	Indian Point

GZA ENGINEER	Angela Hough	BORING COORDINATES	N 463078.9738	E	604446.3875
GZA ENGINEER	Sara Covelli	GROUND SURFACE EL.(FT)	14.628	DATUM	NGVD 29
GZA ENGINEER	Miguel Britos	TOP OF CASING EL.(FT)	14.457	DATE	5/4/07
		WELL DEPTH (FT)	65.00		
WELL DIAMETER	1 INCH	GROUND WATER DEPTH	12.68 FT		
NO. OF WELLS IN CLUSTER	2*	(STATIC WATER LEVEL DEPTH)			

MEASUREMENTS TAKEN FROM:

- [ ] ground surface
- [x] top of casing

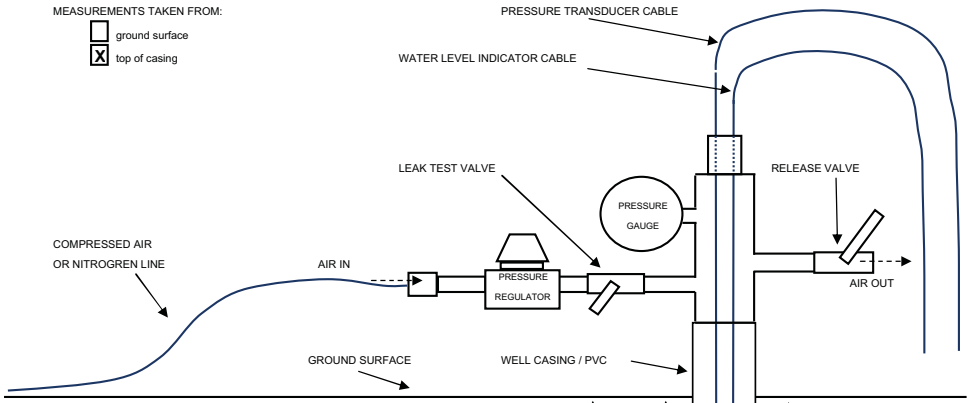

LEGEND:

DTB	DEPTH TO BOTTOM OF WELL FROM GROUND SURFACE	65.00	FT
DTS	DEPTH TO WELL SCREEN FROM GROUND SURFACE	60.00	FT
DTW	DEPTH TO STATIC WATER LEVEL FROM GROUND SURFACE	12.68	FT
WC	WATER COLUMN HEIGHT	52.32	FT
CH	CHANGE IN HEAD AFTER PRESSURIZATION	37.32	FT
AS	WATER COLUMN ABOVE SCREEN	47.32	FT

DTB	65.00	FT
− **DTW**	12.68	FT
= **WC**	52.32	FT
DTS	60.00	FT
− **DTW**	12.68	FT
= **AS**	47.32	FT
AS	47.32	FT
− SAFE MARGIN	10.00	FT
= **CH**	37.32	FT
CH	37.32	FT
+ **DTW**	12.68	FT
=WATER LEVEL INDICATOR DEPTH	50.00	FT
CH / 2.31 =	16.16	PSI
= PRESSURE APPLIED TO WELL HEAD		
DTW**	12.68	FT
+ TRANSDUCER READING	52.310	FT
= TRANSDUCER DEPTH	64.99	FT

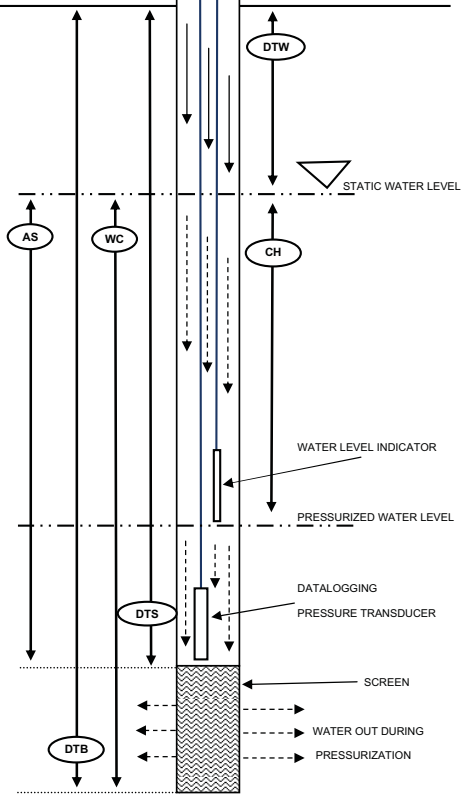

Time Test Start	14:49	
Transducer Reading at test start	52.340	FT
Time of Pressurization	14:49	
Time of Equilibrium	14:57	
Equilibrium Transducer Reading	52.284	FT
Time of Pressure Release	14:57	
Time Test Stop	15:03	

NOTES:

* Two wells in borehole, three wells in cluster

PNEUMATIC SLUG TEST LOG

GZA GEOENVIRONMENTAL OF NEW YORK 440 NINTH AVENUE, 18th FLOOR NEW YORK, NEW YORK 10001 SCIENTISTS AND ENGINEERS	Client Entergy Indian Point Energy Center	WELL ID	MW - 50 - 42
		TEST NO.	1 of 2
		FILE NO.	41.0017869.01
		PROJECT LOCATION	Indian Point

GZA ENGINEER	Angela Hough	BORING COORDINATES	N 463039.1827	E	604494.2976
GZA ENGINEER	Sara Covelli	GROUND SURFACE EL.(FT)	14.92	DATUM	NGVD 29
GZA ENGINEER		TOP OF CASING EL.(FT)	14.45	DATE	5/9/07
		WELL DEPTH (FT)	42.00		
WELL DIAMETER	2 INCH	GROUND WATER DEPTH	7.32 FT		
NO. OF WELLS IN CLUSTER	2	(STATIC WATER LEVEL DEPTH)			

MEASUREMENTS TAKEN FROM:

- [ ] ground surface
- [x] top of casing

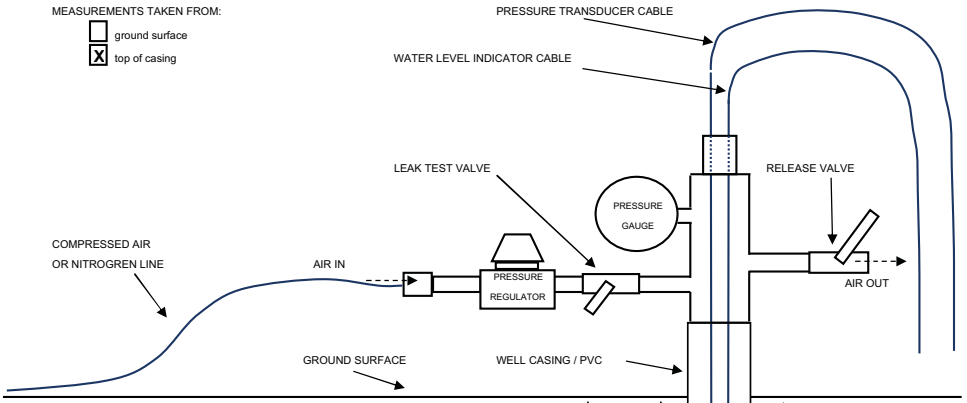

LEGEND:

DTB	DEPTH TO BOTTOM OF WELL FROM GROUND SURFACE	42.00	FT
DTS	DEPTH TO WELL SCREEN FROM GROUND SURFACE	22.00	FT
DTW	DEPTH TO STATIC WATER LEVEL FROM GROUND SURFACE	7.32	FT
WC	WATER COLUMN HEIGHT	34.68	FT
CH	CHANGE IN HEAD AFTER PRESSURIZATION	10.68	FT
AS	WATER COLUMN ABOVE SCREEN	14.68	FT

DTB	42.00	FT
− **DTW**	7.32	FT
= **WC**	34.68	FT
DTS	22.00	FT
− **DTW**	7.32	FT
= **AS**	14.68	FT
AS	14.68	FT
− SAFE MARGIN	4.00	FT
= **CH**	10.68	FT
CH	10.68	FT
+ **DTW**	7.32	FT
=WATER LEVEL INDICATOR DEPTH	18.00	FT
CH / 2.31 =	4.62	PSI
= PRESSURE APPLIED TO WELL HEAD		
DTW**	7.32	FT
+ TRANSDUCER READING	27.049	FT
= TRANSDUCER DEPTH	34.37	FT

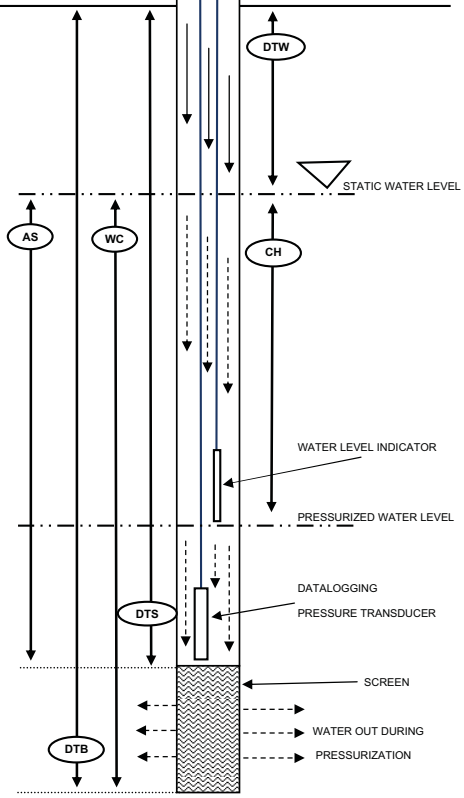

Time Test Start	11:42	
Transducer Reading at test start	27.101	FT
Time of Pressurization	11:42	
Time of Equilibrium	11:56	
Equilibrium Transducer Reading	27.133	FT
Time of Pressure Release	1:56	
Time Test Stop	12:01	

NOTES:

PNEUMATIC SLUG TEST LOG

GZA GEOENVIRONMENTAL OF NEW YORK 440 NINTH AVENUE, 18th FLOOR NEW YORK, NEW YORK 10001 SCIENTISTS AND ENGINEERS	Client Entergy Indian Point Energy Center	WELL ID	MW - 50 - 42
		TEST NO.	2 of 2
		FILE NO.	41.0017869.01
		PROJECT LOCATION	Indian Point

GZA ENGINEER	Angela Hough	BORING COORDINATES	N 463039.1827	E	604494.2976
GZA ENGINEER	Sara Covelli	GROUND SURFACE EL.(FT)	14.92	DATUM	NGVD 29
GZA ENGINEER		TOP OF CASING EL.(FT)	14.45	DATE	5/9/07
		WELL DEPTH (FT)	42.00		
WELL DIAMETER	2 INCH	GROUND WATER DEPTH	7.32 FT		
NO. OF WELLS IN CLUSTER	2	(STATIC WATER LEVEL DEPTH)			

MEASUREMENTS TAKEN FROM:

- [ ] ground surface
- [x] top of casing

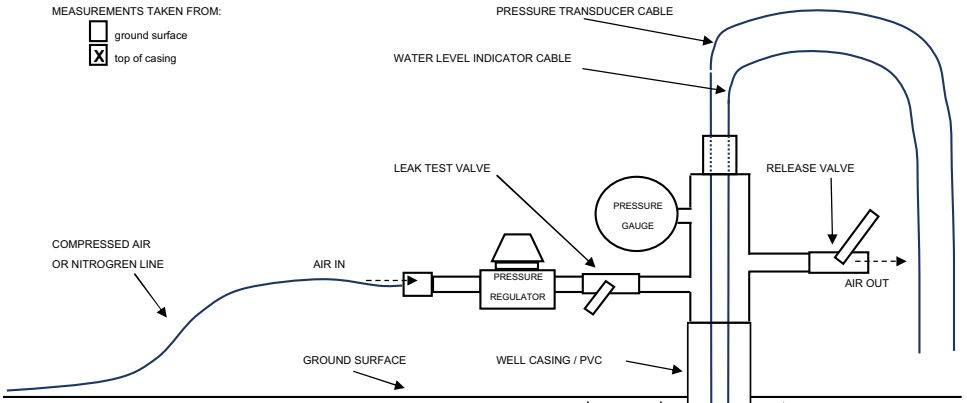

LEGEND:

DTB	DEPTH TO BOTTOM OF WELL FROM GROUND SURFACE	42.00	FT
DTS	DEPTH TO WELL SCREEN FROM GROUND SURFACE	22.00	FT
DTW	DEPTH TO STATIC WATER LEVEL FROM GROUND SURFACE	7.32	FT
WC	WATER COLUMN HEIGHT	34.68	FT
CH	CHANGE IN HEAD AFTER PRESSURIZATION	10.68	FT
AS	WATER COLUMN ABOVE SCREEN	14.68	FT

DTB	42.00	FT
− **DTW**	7.32	FT
= **WC**	34.68	FT
DTS	22.00	FT
− **DTW**	7.32	FT
= **AS**	14.68	FT
AS	14.68	FT
− SAFE MARGIN	4.00	FT
= **CH**	10.68	FT
CH	10.68	FT
+ **DTW**	7.32	FT
=WATER LEVEL INDICATOR DEPTH	18.00	FT
CH / 2.31 =	4.62	PSI
= PRESSURE APPLIED TO WELL HEAD		
DTW**	7.32	FT
+ TRANSDUCER READING	27.049	FT
= TRANSDUCER DEPTH	34.37	FT

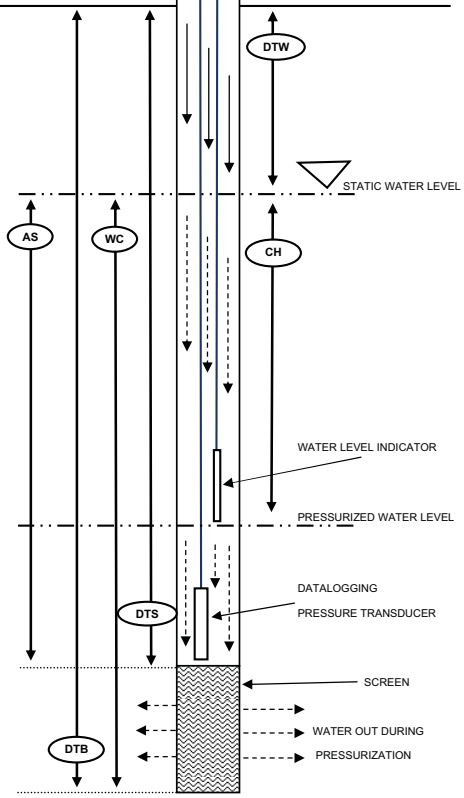

Time Test Start	12:01	
Transducer Reading at test start	27.094	FT
Time of Pressurization	12:01	
Time of Equilibrium	12:07	
Equilibrium Transducer Reading	27.126	FT
Time of Pressure Release	12:08	
Time Test Stop	12:11	

NOTES:

PNEUMATIC SLUG TEST LOG

GZA GEOENVIRONMENTAL OF NEW YORK 440 NINTH AVENUE, 18th FLOOR NEW YORK, NEW YORK 10001 SCIENTISTS AND ENGINEERS	Client Entergy Indian Point Energy Center	WELL ID	MW - 53 - 120
		TEST NO.	1 of 2
		FILE NO.	41.0017869.01
		PROJECT LOCATION	Indian Point

GZA ENGINEER	Angela Hough	BORING COORDINATES	N 462821.6935	E	604732.2667
GZA ENGINEER	Sara Covelli	GROUND SURFACE EL.(FT)	70.26	DATUM	NGVD 29
GZA ENGINEER		TOP OF CASING EL.(FT)	70.19	DATE	12/28/06
		WELL DEPTH (FT)	120		
WELL DIAMETER	1 INCH	GROUND WATER DEPTH	60.8 FT		
NO. OF WELLS IN CLUSTER	2	(STATIC WATER LEVEL DEPTH)			

MEASUREMENTS TAKEN FROM:

- [ ] ground surface
- [x] top of casing

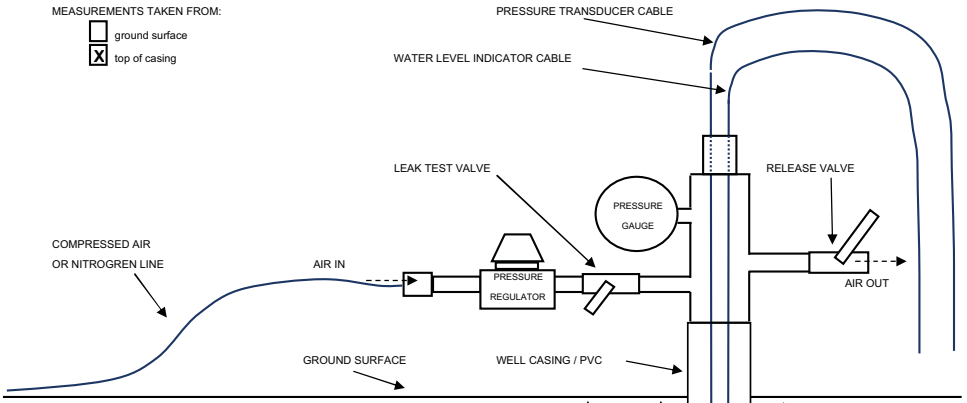

LEGEND:

DTB	DEPTH TO BOTTOM OF WELL FROM GROUND SURFACE	120.00	FT
DTS	DEPTH TO WELL SCREEN FROM GROUND SURFACE	100.00	FT
DTW	DEPTH TO STATIC WATER LEVEL FROM GROUND SURFACE	60.80	FT
WC	WATER COLUMN HEIGHT	59.20	FT
CH	CHANGE IN HEAD AFTER PRESSURIZATION	29.20	FT
AS	WATER COLUMN ABOVE SCREEN	39.20	FT

DTB	120.00	FT
− **DTW**	60.80	FT
= **WC**	59.20	FT
DTS	100.00	FT
− **DTW**	60.80	FT
= **AS**	39.20	FT
AS	39.20	FT
− SAFE MARGIN	10.00	FT
= **CH**	29.20	FT
CH	29.20	FT
+ **DTW**	60.80	FT
=WATER LEVEL INDICATOR DEPTH	90.00	FT
CH / 2.31 =	12.64	PSI
= PRESSURE APPLIED TO WELL HEAD		
DTW	60.80	FT
+ TRANSDUCER READING	33.691	FT
= TRANSDUCER DEPTH	94.49	FT

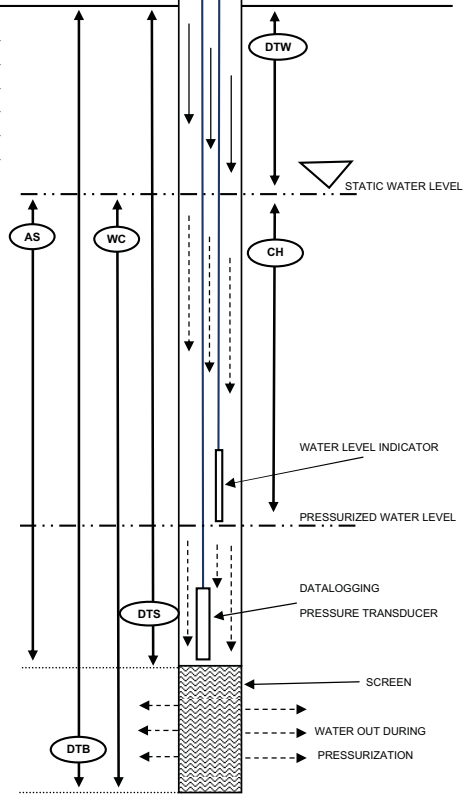

Time Test Start	13:32	
Transducer Reading at test start	33.906	FT
Time of Pressurization	13:33	
Time of Equilibrium	13:57	
Equilibrium Transducer Reading	33.952	FT
Time of Pressure Release	13:58	
Time Test Stop	14:19	

NOTES:

PNEUMATIC SLUG TEST LOG

GZA GEOENVIRONMENTAL OF NEW YORK 440 NINTH AVENUE, 18th FLOOR NEW YORK, NEW YORK 10001 SCIENTISTS AND ENGINEERS	Client Entergy Indian Point Energy Center	WELL ID	MW - 53 - 120
		TEST NO.	2 of 2
		FILE NO.	41.0017869.01
		PROJECT LOCATION	Indian Point

GZA ENGINEER	Angela Hough	BORING COORDINATES	N 462821.6935	E	604732.2667
GZA ENGINEER	Sara Covelli	GROUND SURFACE EL.(FT)	70.26	DATUM	NGVD 29
GZA ENGINEER		TOP OF CASING EL.(FT)	70.19	DATE	12/28/06
		WELL DEPTH (FT)	120		
WELL DIAMETER	1 INCH	GROUND WATER DEPTH	60.8 FT		
NO. OF WELLS IN CLUSTER	2	(STATIC WATER LEVEL DEPTH)			

MEASUREMENTS TAKEN FROM:

- [ ] ground surface
- [x] top of casing

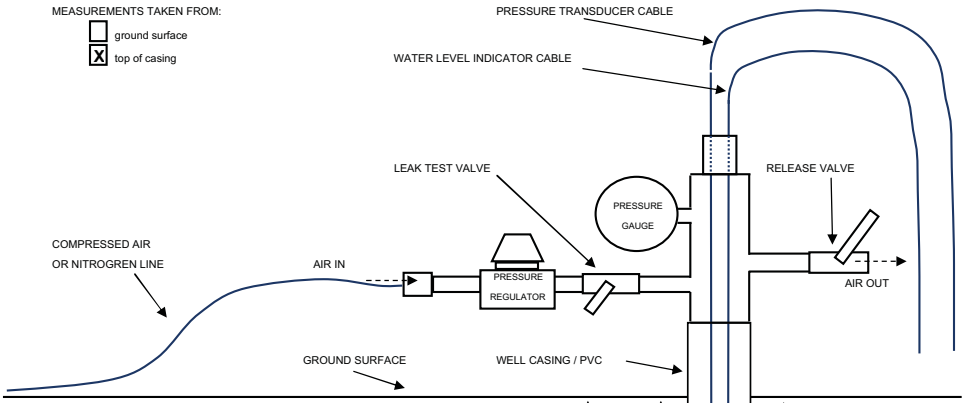

LEGEND:

DTB	DEPTH TO BOTTOM OF WELL FROM GROUND SURFACE	120.00	FT
DTS	DEPTH TO WELL SCREEN FROM GROUND SURFACE	100.00	FT
DTW	DEPTH TO STATIC WATER LEVEL FROM GROUND SURFACE	60.80	FT
WC	WATER COLUMN HEIGHT	59.20	FT
CH	CHANGE IN HEAD AFTER PRESSURIZATION	29.20	FT
AS	WATER COLUMN ABOVE SCREEN	39.20	FT

DTB	120.00	FT
− **DTW**	60.80	FT
= **WC**	59.20	FT
DTS	100.00	FT
− **DTW**	60.80	FT
= **AS**	39.20	FT
AS	39.20	FT
− SAFE MARGIN	10.00	FT
= **CH**	29.20	FT
CH	29.20	FT
+ **DTW**	60.80	FT
=WATER LEVEL INDICATOR DEPTH	90.00	FT
CH / 2.31 =	12.64	PSI
= PRESSURE APPLIED TO WELL HEAD		
DTW	60.80	FT
+ TRANSDUCER READING	33.691	FT
= TRANSDUCER DEPTH	94.49	FT

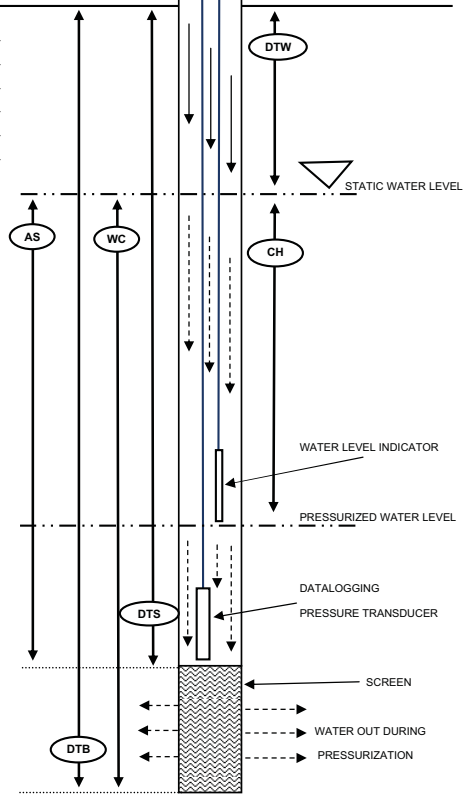

Time Test Start	14:19	
Transducer Reading at test start	33.827	FT
Time of Pressurization	14:20	
Time of Equilibrium	14:49	
Equilibrium Transducer Reading	33.742	FT
Time of Pressure Release	14:49	
Time Test Stop	15:08	

NOTES:

PNEUMATIC SLUG TEST LOG

GZA GEOENVIRONMENTAL OF NEW YORK 440 NINTH AVENUE, 18th FLOOR NEW YORK, NEW YORK 10001 SCIENTISTS AND ENGINEERS	Client Entergy Indian Point Energy Center	WELL ID	MW - 55 - 24
		TEST NO.	1 of 2
		FILE NO.	41.0017869.01
		PROJECT LOCATION	Indian Point

GZA ENGINEER	Angela Hough	BORING COORDINATES	N 462997.0065	E	604636.4717
GZA ENGINEER	Sara Covelli	GROUND SURFACE EL.(FT)	18.25	DATUM	NGVD 29
GZA ENGINEER	Rick Ponti	TOP OF CASING EL.(FT)	17.77	DATE	12/27/06
		WELL DEPTH (FT)	24		
WELL DIAMETER	1 INCH	GROUND WATER DEPTH	10.52 FT		
NO. OF WELLS IN CLUSTER	3	(STATIC WATER LEVEL DEPTH)			

MEASUREMENTS TAKEN FROM:

- [ ] ground surface
- [x] top of casing

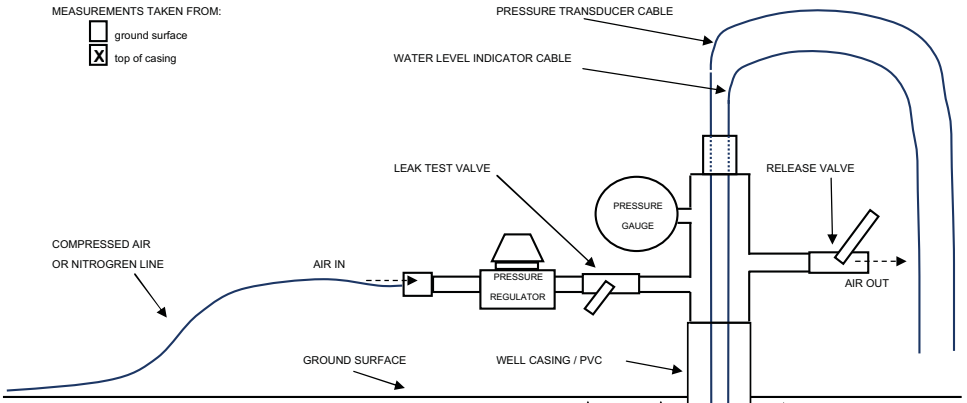

LEGEND:

DTB	DEPTH TO BOTTOM OF WELL FROM GROUND SURFACE	24.00	FT
DTS	DEPTH TO WELL SCREEN FROM GROUND SURFACE	14.00	FT
DTW	DEPTH TO STATIC WATER LEVEL FROM GROUND SURFACE	10.52	FT
WC	WATER COLUMN HEIGHT	13.48	FT
CH	CHANGE IN HEAD AFTER PRESSURIZATION	2.98	FT
AS	WATER COLUMN ABOVE SCREEN	3.48	FT

DTB	24.00	FT
− **DTW**	10.52	FT
= **WC**	13.48	FT
DTS	14.00	FT
− **DTW**	10.52	FT
= **AS**	3.48	FT
AS	3.48	FT
− SAFE MARGIN	0.50	FT
= **CH**	2.98	FT
CH	2.98	FT
+ **DTW**	10.52	FT
=WATER LEVEL INDICATOR DEPTH	13.50	FT
CH / 2.31 =	1.29	PSI
= PRESSURE APPLIED TO WELL HEAD		
DTW	10.52	FT
+ TRANSDUCER READING	8.904	FT
= TRANSDUCER DEPTH	19.42	FT

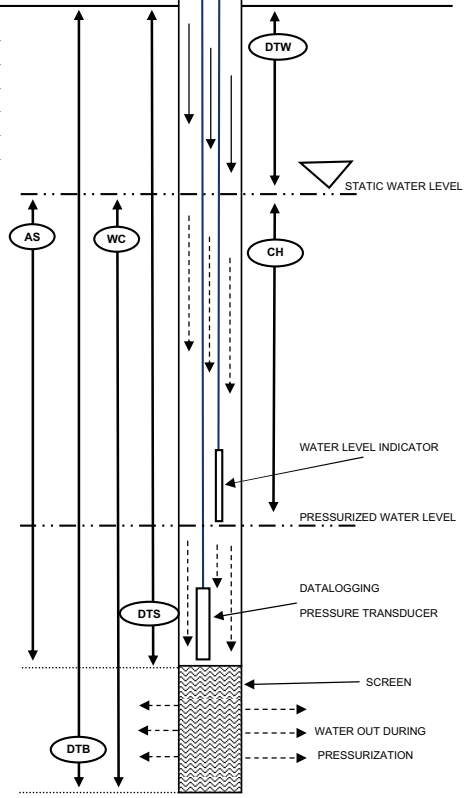

Time Test Start	8:58	
Transducer Reading at test start	8.986	FT
Time of Pressurization	8:58	
Time of Equilibrium	9:03	
Equilibrium Transducer Reading	8.902	FT
Time of Pressure Release	9:03	
Time Test Stop	9:07	

NOTES:

PNEUMATIC SLUG TEST LOG

GZA GEOENVIRONMENTAL OF NEW YORK 440 NINTH AVENUE, 18th FLOOR NEW YORK, NEW YORK 10001 SCIENTISTS AND ENGINEERS	Client Entergy Indian Point Energy Center	WELL ID	MW - 55 - 24
		TEST NO.	2 of 2
		FILE NO.	41.0017869.01
		PROJECT LOCATION	Indian Point

GZA ENGINEER	Angela Hough	BORING COORDINATES	N 462997.0065	E	604636.4717
GZA ENGINEER	Sara Covelli	GROUND SURFACE EL.(FT)	18.25	DATUM	NGVD 29
GZA ENGINEER	Rick Ponti	TOP OF CASING EL.(FT)	17.77	DATE	12/27/06
		WELL DEPTH (FT)	24		
WELL DIAMETER	1 INCH	GROUND WATER DEPTH	10.52 FT		
NO. OF WELLS IN CLUSTER	3	(STATIC WATER LEVEL DEPTH)			

MEASUREMENTS TAKEN FROM:

- [ ] ground surface
- [x] top of casing

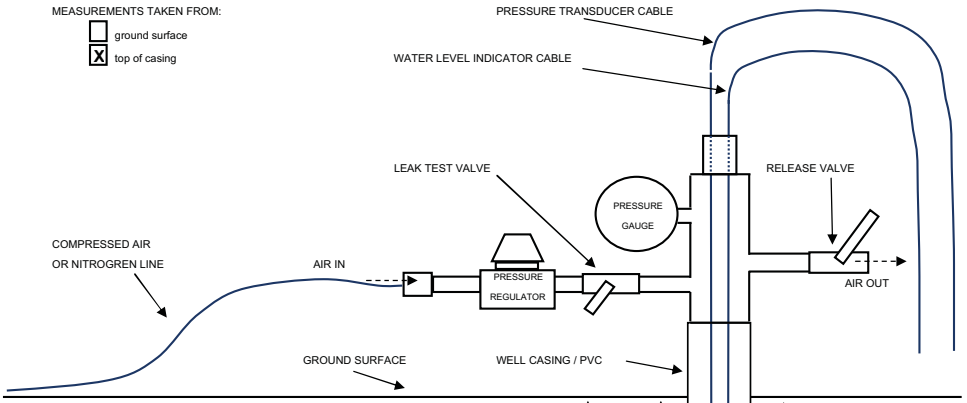

LEGEND:

DTB	DEPTH TO BOTTOM OF WELL FROM GROUND SURFACE	24.00	FT
DTS	DEPTH TO WELL SCREEN FROM GROUND SURFACE	14.00	FT
DTW	DEPTH TO STATIC WATER LEVEL FROM GROUND SURFACE	10.52	FT
WC	WATER COLUMN HEIGHT	13.48	FT
CH	CHANGE IN HEAD AFTER PRESSURIZATION	2.98	FT
AS	WATER COLUMN ABOVE SCREEN	3.48	FT

DTB	24.00	FT
− **DTW**	10.52	FT
= **WC**	13.48	FT
DTS	14.00	FT
− **DTW**	10.52	FT
= **AS**	3.48	FT
AS	3.48	FT
− SAFE MARGIN	0.50	FT
= **CH**	2.98	FT
CH	2.98	FT
+ **DTW**	10.52	FT
=WATER LEVEL INDICATOR DEPTH	13.50	FT
CH / 2.31 =	1.29	PSI
= PRESSURE APPLIED TO WELL HEAD		
DTW	10.52	FT
+ TRANSDUCER READING	8.904	FT
= TRANSDUCER DEPTH	19.42	FT

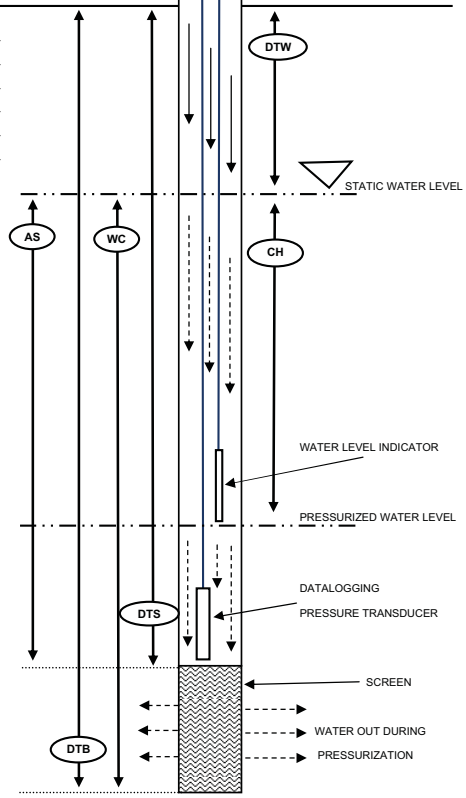

Time Test Start	9:08	
Transducer Reading at test start	8.944	FT
Time of Pressurization	9:08	
Time of Equilibrium	9:14	
Equilibrium Transducer Reading	8.975	FT
Time of Pressure Release	9:14	
Time Test Stop	9:19	

NOTES:

PNEUMATIC SLUG TEST LOG

GZA GEOENVIRONMENTAL OF NEW YORK 440 NINTH AVENUE, 18th FLOOR NEW YORK, NEW YORK 10001 SCIENTISTS AND ENGINEERS	Client Entergy Indian Point Energy Center	WELL ID	MW - 55 - 35
		TEST NO.	1 of 2
		FILE NO.	41.0017869.01
		PROJECT LOCATION	Indian Point

GZA ENGINEER	Angela Hough	BORING COORDINATES	N 462997.1961	E	604636.481
GZA ENGINEER	Sara Covelli	GROUND SURFACE EL.(FT)	18.25	DATUM	NGVD 29
GZA ENGINEER	Rick Ponti	TOP OF CASING EL.(FT)	17.77	DATE	12/27/06
		WELL DEPTH (FT)	35		
WELL DIAMETER	1 INCH	GROUND WATER DEPTH	10.88 FT		
NO. OF WELLS IN CLUSTER	3	(STATIC WATER LEVEL DEPTH)			

MEASUREMENTS TAKEN FROM:

- [ ] ground surface
- [x] top of casing

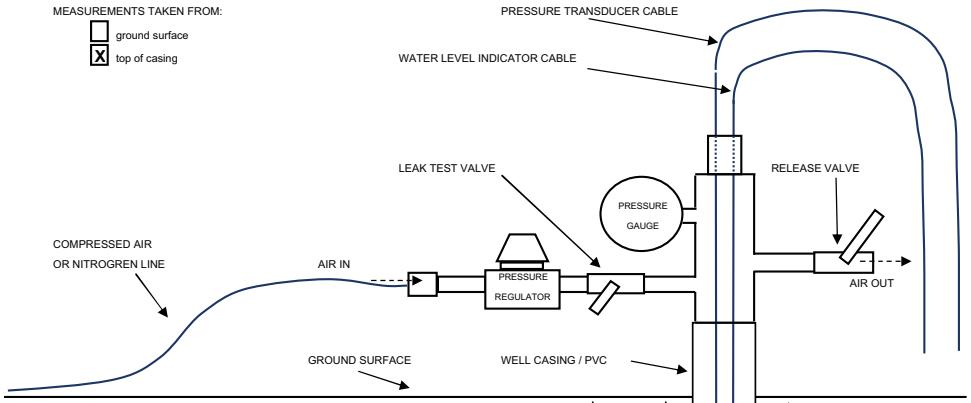

LEGEND:

DTB	DEPTH TO BOTTOM OF WELL FROM GROUND SURFACE	35.00	FT
DTS	DEPTH TO WELL SCREEN FROM GROUND SURFACE	30.00	FT
DTW	DEPTH TO STATIC WATER LEVEL FROM GROUND SURFACE	10.88	FT
WC	WATER COLUMN HEIGHT	24.12	FT
CH	CHANGE IN HEAD AFTER PRESSURIZATION	14.12	FT
AS	WATER COLUMN ABOVE SCREEN	19.12	FT

DTB	35.00	FT
− **DTW**	10.88	FT
= **WC**	24.12	FT
DTS	30.00	FT
− **DTW**	10.88	FT
= **AS**	19.12	FT
AS	19.12	FT
− SAFE MARGI	5.00	FT
= **CH**	14.12	FT
CH	14.12	FT
+ **DTW**	10.88	FT
=WATER LEVEL INDICATOR DEPTH	25.00	FT
CH / 2.31 =	6.11	PSI
= PRESSURE APPLIED TO WELL HEAD		
DTW	10.88	FT
+ TRANSDUCER READING	22.737	FT
= TRANSDUCER DEPTH	33.62	FT

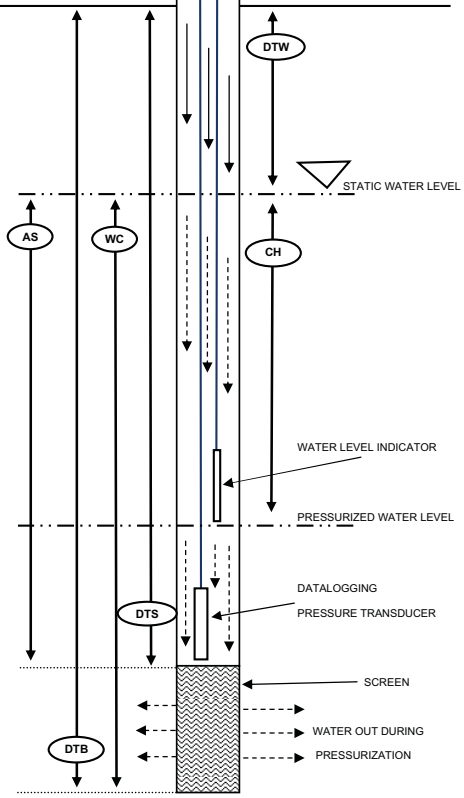

Time Test Start	10:45	
Transducer Reading at test start	22.761	FT
Time of Pressurization	10:50	
Time of Equilibrium	10:54	
Equilibrium Transducer Reading	22.764	FT
Time of Pressure Release	10:54	
Time Test Stop	10:58	

NOTES:

False start upon pressurization at 10:46. Air leak detected.
False start upon pressurization at 10:47. Air leak detected and resolved.
Actual pressurization start at 10:50.

PNEUMATIC SLUG TEST LOG

GZA GEOENVIRONMENTAL OF NEW YORK 440 NINTH AVENUE, 18th FLOOR NEW YORK, NEW YORK 10001 SCIENTISTS AND ENGINEERS	Client Entergy Indian Point Energy Center	WELL ID	MW - 55 - 35
		TEST NO.	2 of 2
		FILE NO.	41.0017869.01
		PROJECT LOCATION	Indian Point

GZA ENGINEER	Angela Hough	BORING COORDINATES	N 462997.1961	E	604636.481
GZA ENGINEER	Sara Covelli	GROUND SURFACE EL.(FT)	18.25	DATUM	NGVD 29
GZA ENGINEER	Rick Ponti	TOP OF CASING EL.(FT)	17.77	DATE	12/27/06
		WELL DEPTH (FT)	35		
WELL DIAMETER	1 INCH	GROUND WATER DEPTH	10.88 FT		
NO. OF WELLS IN CLUSTER	3	(STATIC WATER LEVEL DEPTH)			

MEASUREMENTS TAKEN FROM:

- [ ] ground surface
- [x] top of casing

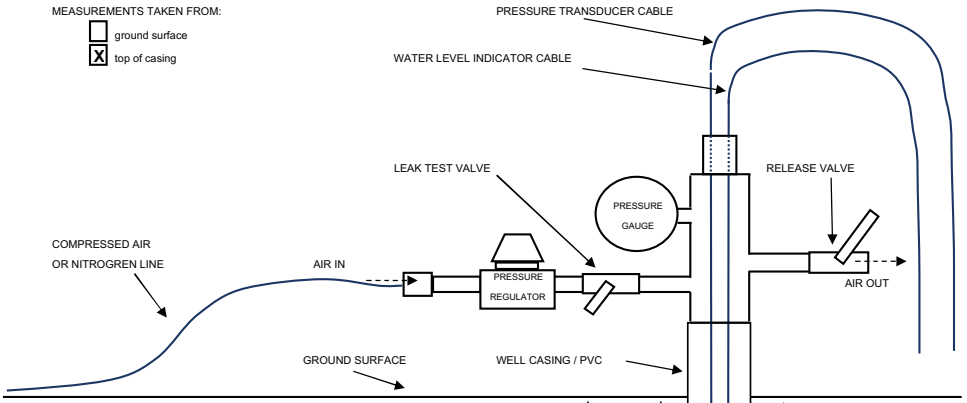

LEGEND:

DTB	DEPTH TO BOTTOM OF WELL FROM GROUND SURFACE	35.00	FT
DTS	DEPTH TO WELL SCREEN FROM GROUND SURFACE	30.00	FT
DTW	DEPTH TO STATIC WATER LEVEL FROM GROUND SURFACE	10.88	FT
WC	WATER COLUMN HEIGHT	24.12	FT
CH	CHANGE IN HEAD AFTER PRESSURIZATION	14.12	FT
AS	WATER COLUMN ABOVE SCREEN	19.12	FT

DTB	35.00	FT
− **DTW**	10.88	FT
= **WC**	24.12	FT
DTS	30.00	FT
− **DTW**	10.88	FT
= **AS**	19.12	FT
AS	19.12	FT
− SAFE MARGIN	5.00	FT
= **CH**	14.12	FT
CH	14.12	FT
+ **DTW**	10.88	FT
=WATER LEVEL INDICATOR DEPTH	25.00	FT
CH / 2.31 =	6.11	PSI
= PRESSURE APPLIED TO WELL HEAD		
DTW	10.88	FT
+ TRANSDUCER READING	22.737	FT
= TRANSDUCER DEPTH	33.62	FT

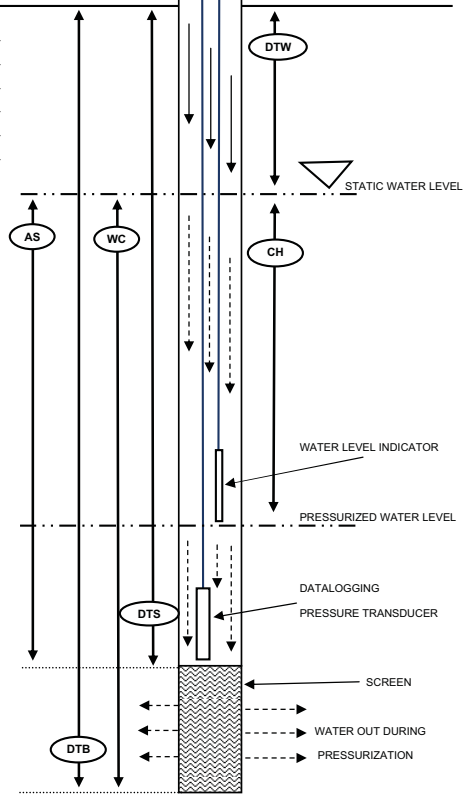

Time Test Start	10:59	
Transducer Reading at test start	22.754	FT
Time of Pressurization	10:59	
Time of Equilibrium	11:03	
Equilibrium Transducer Reading	22.748	FT
Time of Pressure Release	11:03	
Time Test Stop	11:06	

NOTES:

PNEUMATIC SLUG TEST LOG

GZA GEOENVIRONMENTAL OF NEW YORK 440 NINTH AVENUE, 18th FLOOR NEW YORK, NEW YORK 10001 SCIENTISTS AND ENGINEERS	Client Entergy Indian Point Energy Center	WELL ID	MW - 55 - 54
		TEST NO.	1 of 2
		FILE NO.	41.0017869.01
		PROJECT LOCATION	Indian Point

GZA ENGINEER	Angela Hough	BORING COORDINATES	N 462997.1735	E	604636.5227
GZA ENGINEER	Sara Covelli	GROUND SURFACE EL.(FT)	18.25	DATUM	NGVD 29
GZA ENGINEER	Rick Ponti	TOP OF CASING EL.(FT)	17.77	DATE	12/27/06
		WELL DEPTH (FT)	54		
WELL DIAMETER	1 INCH	GROUND WATER DEPTH	10.6 FT		
NO. OF WELLS IN CLUSTER	3	(STATIC WATER LEVEL DEPTH)			

MEASUREMENTS TAKEN FROM:

- [ ] ground surface
- [x] top of casing

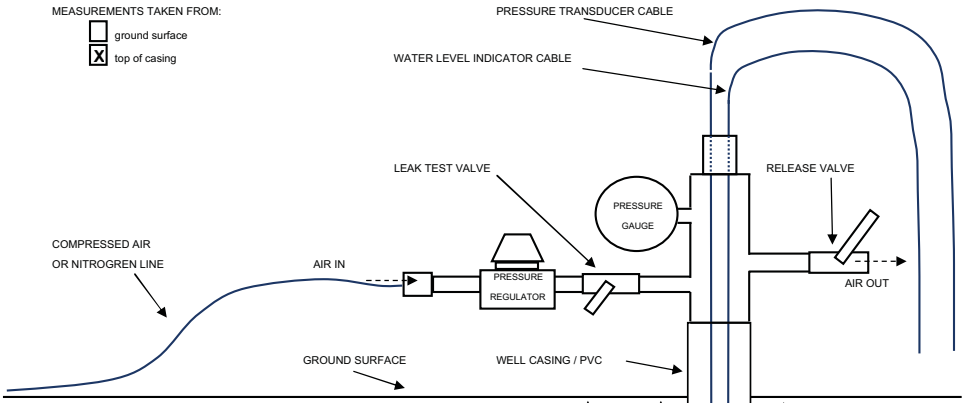

LEGEND:

DTB	DEPTH TO BOTTOM OF WELL FROM GROUND SURFACE	54.00	FT
DTS	DEPTH TO WELL SCREEN FROM GROUND SURFACE	44.00	FT
DTW	DEPTH TO STATIC WATER LEVEL FROM GROUND SURFACE	10.60	FT
WC	WATER COLUMN HEIGHT	43.40	FT
CH	CHANGE IN HEAD AFTER PRESSURIZATION	28.40	FT
AS	WATER COLUMN ABOVE SCREEN	33.40	FT

DTB	54.00	FT
− **DTW**	10.60	FT
= **WC**	43.40	FT
DTS	44.00	FT
− **DTW**	10.60	FT
= **AS**	33.40	FT
AS	33.40	FT
− SAFE MARGIN	5.00	FT
= **CH**	28.40	FT
CH	28.40	FT
+ **DTW**	10.60	FT
=WATER LEVEL INDICATOR DEPTH	39.00	FT
CH / 2.31 =	12.29	PSI
= PRESSURE APPLIED TO WELL HEAD		
DTW	10.60	FT
+ TRANSDUCER READING	34.827	FT
= TRANSDUCER DEPTH	45.43	FT

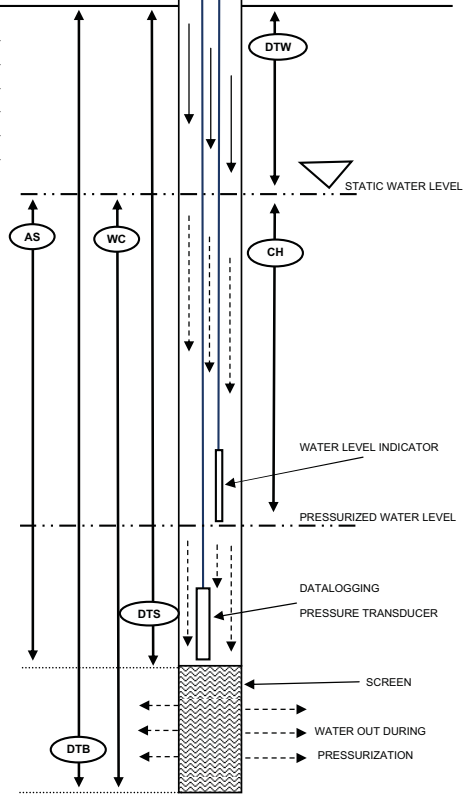

Time Test Start	11:29	
Transducer Reading at test start	34.839	FT
Time of Pressurization	11:32	
Time of Equilibrium	11:36	
Equilibrium Transducer Reading	34.887	FT
Time of Pressure Release	11:37	
Time Test Stop	11:42	

NOTES:

False start (pressurization) at 11:30. Leak detected and resolved. Restart pressurization at 11:32.

PNEUMATIC SLUG TEST LOG

GZA GEOENVIRONMENTAL OF NEW YORK 440 NINTH AVENUE, 18th FLOOR NEW YORK, NEW YORK 10001 SCIENTISTS AND ENGINEERS	Client Entergy Indian Point Energy Center	WELL ID	MW - 55 - 54
		TEST NO.	2 of 2
		FILE NO.	41.0017869.01
		PROJECT LOCATION	Indian Point

GZA ENGINEER	Angela Hough	BORING COORDINATES	N 462997.1735	E	604636.5227
GZA ENGINEER	Sara Covelli	GROUND SURFACE EL.(FT)	18.25	DATUM	NGVD 29
GZA ENGINEER	Rick Ponti	TOP OF CASING EL.(FT)	17.77	DATE	12/27/06
		WELL DEPTH (FT)	54		
WELL DIAMETER	1 INCH	GROUND WATER DEPTH	10.6 FT		
NO. OF WELLS IN CLUSTER	3	(STATIC WATER LEVEL DEPTH)			

MEASUREMENTS TAKEN FROM:

- [ ] ground surface
- [x] top of casing

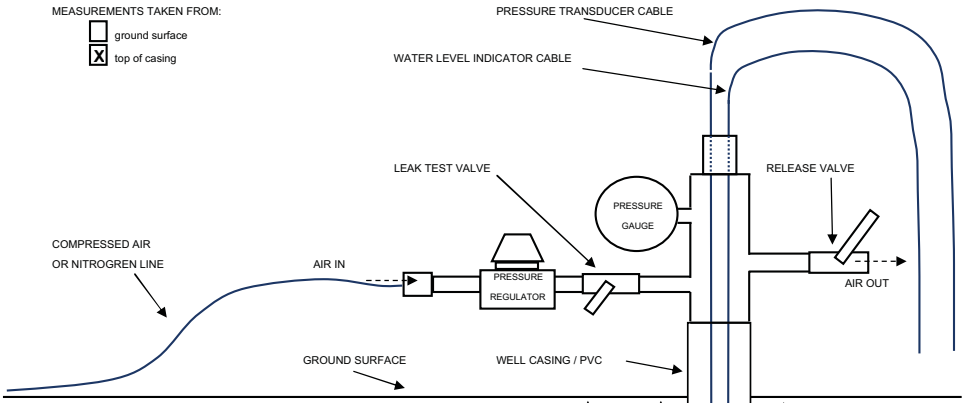

LEGEND:

DTB	DEPTH TO BOTTOM OF WELL FROM GROUND SURFACE	54.00	FT
DTS	DEPTH TO WELL SCREEN FROM GROUND SURFACE	44.00	FT
DTW	DEPTH TO STATIC WATER LEVEL FROM GROUND SURFACE	10.60	FT
WC	WATER COLUMN HEIGHT	43.40	FT
CH	CHANGE IN HEAD AFTER PRESSURIZATION	28.40	FT
AS	WATER COLUMN ABOVE SCREEN	33.40	FT

DTB	54.00	FT
− **DTW**	10.60	FT
= **WC**	43.40	FT
DTS	44.00	FT
− **DTW**	10.60	FT
= **AS**	33.40	FT
AS	33.40	FT
− SAFE MARGIN	5.00	FT
= **CH**	28.40	FT
CH	28.40	FT
+ **DTW**	10.60	FT
=WATER LEVEL INDICATOR DEPTH	39.00	FT
CH / 2.31 =	12.29	PSI
= PRESSURE APPLIED TO WELL HEAD		
DTW	10.60	FT
+ TRANSDUCER READING	34.827	FT
= TRANSDUCER DEPTH	45.43	FT

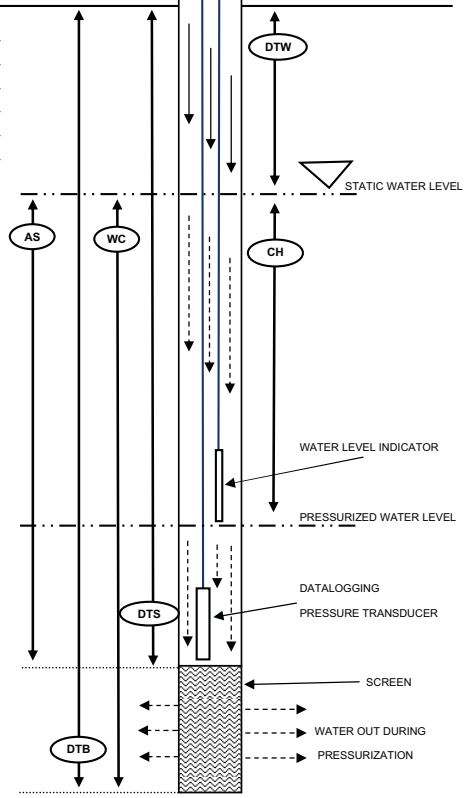

Time Test Start	11:43	
Transducer Reading at test start	34.844	FT
Time of Pressurization	11:43	
Time of Equilibrium	11:48	
Equilibrium Transducer Reading	34.894	FT
Time of Pressure Release	11:48	
Time Test Stop	11:53	

NOTES:

PNEUMATIC SLUG TEST LOG

GZA GEOENVIRONMENTAL OF NEW YORK 440 NINTH AVENUE, 18th FLOOR NEW YORK, NEW YORK 10001 SCIENTISTS AND ENGINEERS	Client Entergy Indian Point Energy Center	WELL ID	MW - 56 - 85
		TEST NO.	1 of 2
		FILE NO.	41.0017869.01
		PROJECT LOCATION	Indian Point

GZA ENGINEER	Angela Hough	BORING COORDINATES	N 462707.4700	E	604658.9268
GZA ENGINEER	Sara Covelli	GROUND SURFACE EL.(FT)	70.258	DATUM	NGVD 29
GZA ENGINEER		TOP OF CASING EL.(FT)	69.207	DATE	12/28/06
		WELL DEPTH (FT)	84.9		
WELL DIAMETER	1 INCH	GROUND WATER DEPTH	46.76 FT		
NO. OF WELLS IN CLUSTER	2	(STATIC WATER LEVEL DEPTH)			

MEASUREMENTS TAKEN FROM:

- [ ] ground surface
- [x] top of casing

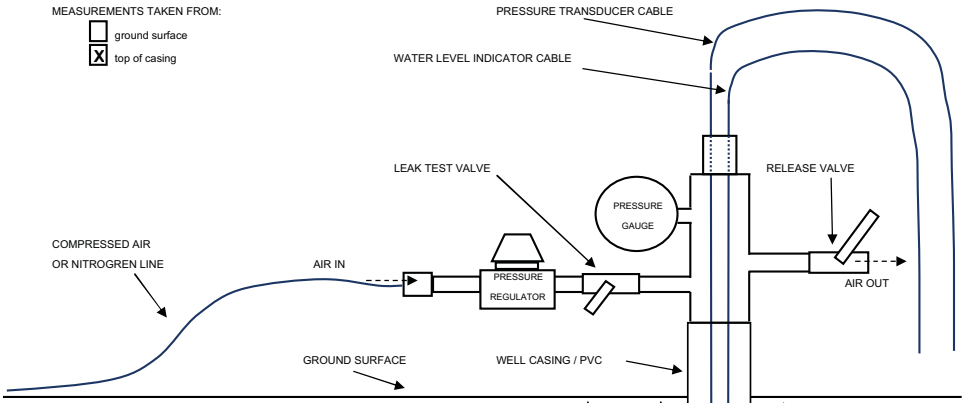

LEGEND:

DTB	DEPTH TO BOTTOM OF WELL FROM GROUND SURFACE	84.90	FT
DTS	DEPTH TO WELL SCREEN FROM GROUND SURFACE	70.00	FT
DTW	DEPTH TO STATIC WATER LEVEL FROM GROUND SURFACE	46.76	FT
WC	WATER COLUMN HEIGHT	38.14	FT
CH	CHANGE IN HEAD AFTER PRESSURIZATION	5.00	FT
AS	WATER COLUMN ABOVE SCREEN	23.24	FT

DTB	84.90	FT
− **DTW**	46.76	FT
= **WC**	38.14	FT
DTS	70.00	FT
− **DTW**	46.76	FT
= **AS**	23.24	FT
AS	23.24	FT
− SAFE MARGIN	18.24	FT
= **CH**	5.00	FT
CH	5.00	FT
+ **DTW**	46.76	FT
=WATER LEVEL INDICATOR DEPTH	51.76	FT
CH / 2.31 =	2.16	PSI
= PRESSURE APPLIED TO WELL HEAD		
DTW	46.76	FT
+ TRANSDUCER READING	6.379	FT
= TRANSDUCER DEPTH	53.14	FT

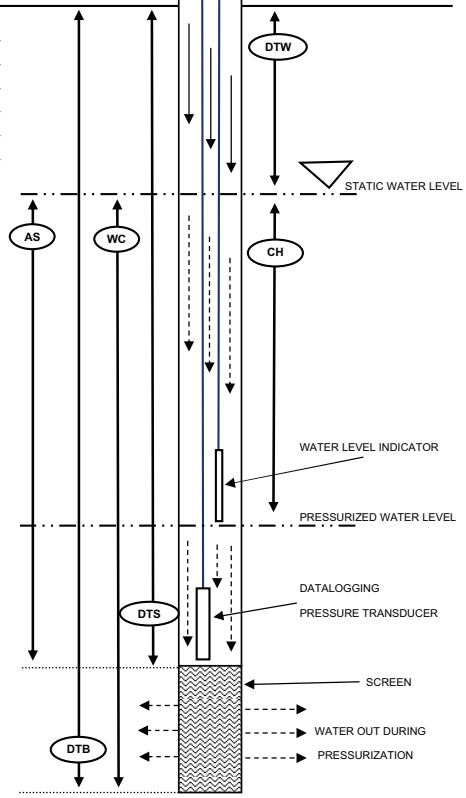

Time Test Start	8:59	
Transducer Reading at test start	6.341	FT
Time of Pressurization	9:00	
Time of Equilibrium	9:04	
Equilibrium Transducer Reading	6.302	FT
Time of Pressure Release	9:04	
Time Test Stop	9:10	

NOTES:

Due to an obstruction in MW-56-85 at approximately 53 ft b/g, pressure transducer could not be lowered enough to log more than a 5 ft change in head.

PNEUMATIC SLUG TEST LOG

GZA GEOENVIRONMENTAL OF NEW YORK 440 NINTH AVENUE, 18th FLOOR NEW YORK, NEW YORK 10001 SCIENTISTS AND ENGINEERS	Client Entergy Indian Point Energy Center	WELL ID	MW - 56 - 85
		TEST NO.	2 of 2
		FILE NO.	41.0017869.01
		PROJECT LOCATION	Indian Point

GZA ENGINEER	Angela Hough	BORING COORDINATES	N 462707.4700	E	604658.9268
GZA ENGINEER	Sara Covelli	GROUND SURFACE EL.(FT)	70.258	DATUM	NGVD 29
GZA ENGINEER		TOP OF CASING EL.(FT)	69.207	DATE	12/28/06
		WELL DEPTH (FT)	84.9		
WELL DIAMETER	1 INCH	GROUND WATER DEPTH	46.76 FT		
NO. OF WELLS IN CLUSTER	2	(STATIC WATER LEVEL DEPTH)			

MEASUREMENTS TAKEN FROM:

- [ ] ground surface
- [x] top of casing

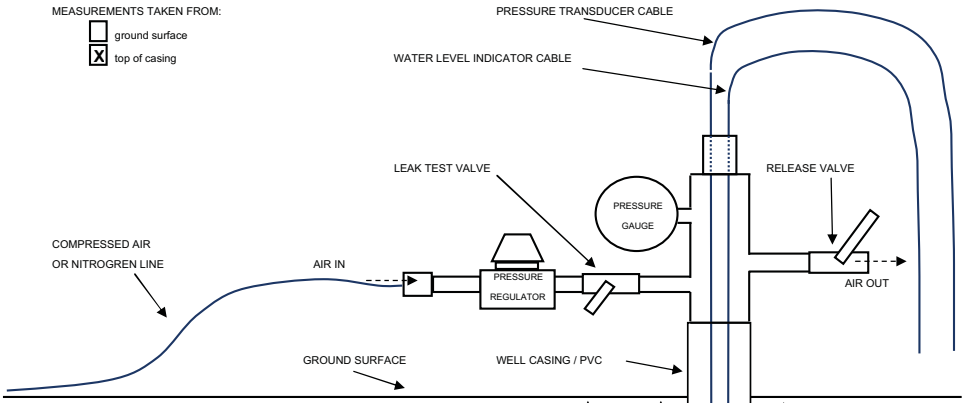

LEGEND:

DTB	DEPTH TO BOTTOM OF WELL FROM GROUND SURFACE	84.90	FT
DTS	DEPTH TO WELL SCREEN FROM GROUND SURFACE	70.00	FT
DTW	DEPTH TO STATIC WATER LEVEL FROM GROUND SURFACE	46.76	FT
WC	WATER COLUMN HEIGHT	38.14	FT
CH	CHANGE IN HEAD AFTER PRESSURIZATION	5.00	FT
AS	WATER COLUMN ABOVE SCREEN	23.24	FT

DTB	84.90	FT
− **DTW**	46.76	FT
= **WC**	38.14	FT
DTS	70.00	FT
− **DTW**	46.76	FT
= **AS**	23.24	FT
AS	23.24	FT
− SAFE MARGIN	18.24	FT
= **CH**	5.00	FT
CH	5.00	FT
+ **DTW**	46.76	FT
=WATER LEVEL INDICATOR DEPTH	51.76	FT
CH / 2.31 =	2.16	PSI
= PRESSURE APPLIED TO WELL HEAD		
DTW	46.76	FT
+ TRANSDUCER READING	6.379	FT
= TRANSDUCER DEPTH	53.14	FT

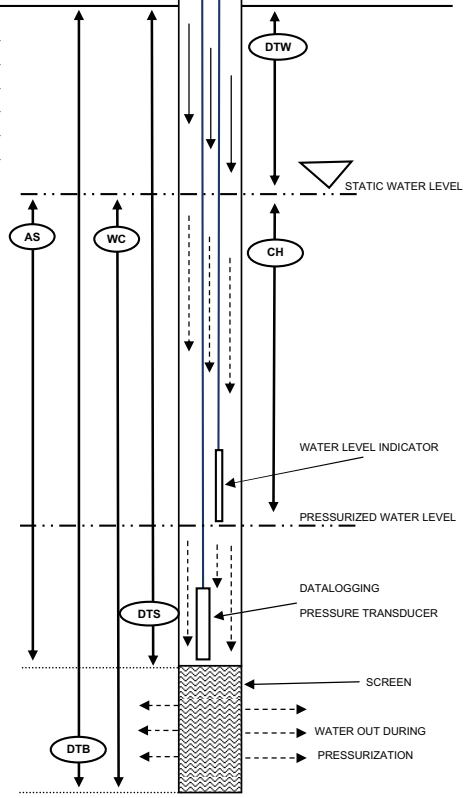

Time Test Start	9:10	
Transducer Reading at test start	6.335	FT
Time of Pressurization	9:11	
Time of Equilibrium	9:14	
Equilibrium Transducer Reading	6.319	FT
Time of Pressure Release	9:15	
Time Test Stop	9:20	

NOTES:

Due to an obstruction in MW-56-85 at approximately 53 ft b/g, pressure transducer could not be lowered enough to log more than a 5 ft change in head.

PNEUMATIC SLUG TEST LOG

GZA GEOENVIRONMENTAL OF NEW YORK 440 NINTH AVENUE, 18th FLOOR NEW YORK, NEW YORK 10001 SCIENTISTS AND ENGINEERS	Client Entergy Indian Point Energy Center	WELL ID	MW - 57 - 11
		TEST NO.	1 of 2
		FILE NO.	41.0017869.01
		PROJECT LOCATION	Indian Point

GZA ENGINEER	Angela Hough	BORING COORDINATES	N 462888.6888	E	604562.9404
GZA ENGINEER	Sara Covelli	GROUND SURFACE EL.(FT)	14.98	DATUM	NGVD 29
GZA ENGINEER	Rick Ponti	TOP OF CASING EL.(FT)	14.73	DATE	12/26/06
		WELL DEPTH (FT)	11		
WELL DIAMETER	1 INCH	GROUND WATER DEPTH	5.44 FT		
NO. OF WELLS IN CLUSTER	3	(STATIC WATER LEVEL DEPTH)			

MEASUREMENTS TAKEN FROM:

- [ ] ground surface
- [x] top of casing

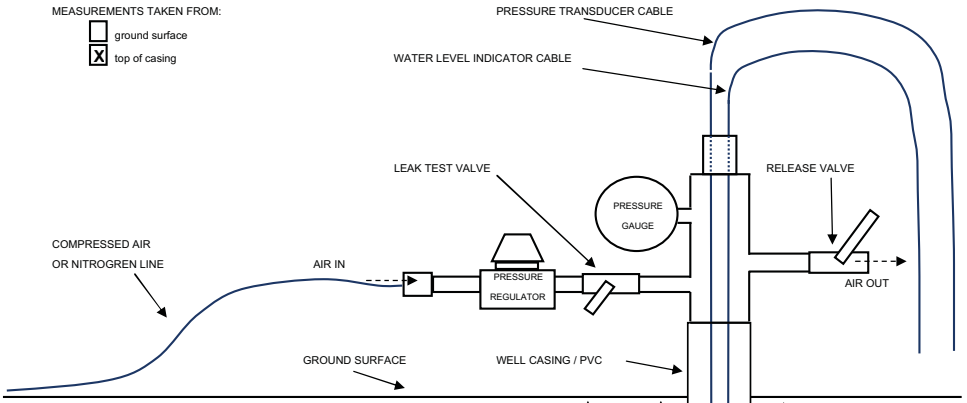

LEGEND:

DTB	DEPTH TO BOTTOM OF WELL FROM GROUND SURFACE	11.00	FT
DTS	DEPTH TO WELL SCREEN FROM GROUND SURFACE	8.50	FT
DTW	DEPTH TO STATIC WATER LEVEL FROM GROUND SURFACE	5.44	FT
WC	WATER COLUMN HEIGHT	5.56	FT
CH	CHANGE IN HEAD AFTER PRESSURIZATION	3.06	FT
AS	WATER COLUMN ABOVE SCREEN	3.06	FT

DTB	11.00	FT
− **DTW**	5.44	FT
= **WC**	5.56	FT
DTS	8.50	FT
− **DTW**	5.44	FT
= **AS**	3.06	FT
AS	3.06	FT
− SAFE MARGIN	0.00	FT
= **CH**	3.06	FT
CH	3.06	FT
+ **DTW**	5.44	FT
=WATER LEVEL INDICATOR DEPTH	8.50	FT
CH / 2.31 =	1.32	PSI
= PRESSURE APPLIED TO WELL HEAD		
DTW	5.44	FT
+ TRANSDUCER READING	5.196	FT
= TRANSDUCER DEPTH	10.64	FT

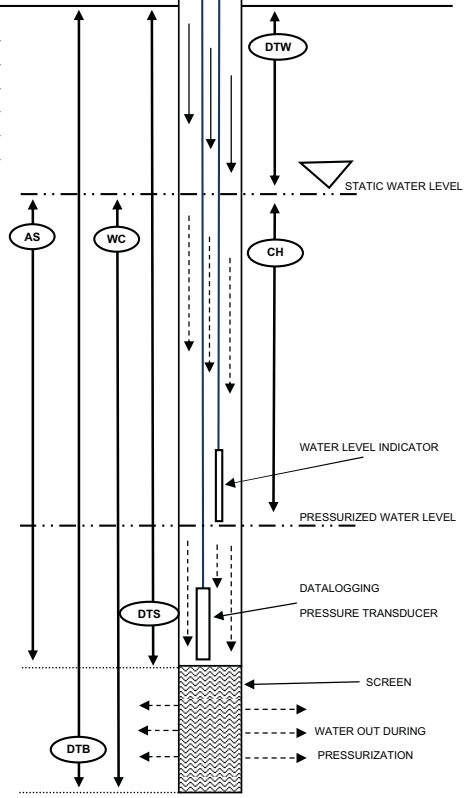

Time Test Start	13:16	
Transducer Reading at test start	5.196	FT
Time of Pressurization	13:16	
Time of Equilibrium	13:30	
Equilibrium Transducer Reading	6.415	FT
Time of Pressure Release	13:30	
Time Test Stop	13:36	

NOTES:

Due to the minimal extent of the water column above the screen in this well, the well was pressurized to drive the water column to the midpoint of the screen (8.5 ft b/g)

Note that DTS for this test is the midpoint of the well screen.

Results of this test will be compared with sustained yield test (administered with a peristaltic pump) results for this well.

PNEUMATIC SLUG TEST LOG

GZA GEOENVIRONMENTAL OF NEW YORK 440 NINTH AVENUE, 18th FLOOR NEW YORK, NEW YORK 10001 SCIENTISTS AND ENGINEERS	Client Entergy Indian Point Energy Center	WELL ID	MW - 57 - 11
		TEST NO.	2 of 2
		FILE NO.	41.0017869.01
		PROJECT LOCATION	Indian Point

GZA ENGINEER	Angela Hough	BORING COORDINATES	N 462888.6888	E	604562.9404
GZA ENGINEER	Sara Covelli	GROUND SURFACE EL.(FT)	14.98	DATUM	NGVD 29
GZA ENGINEER	Rick Ponti	TOP OF CASING EL.(FT)	14.73	DATE	12/26/06
		WELL DEPTH (FT)	11		
WELL DIAMETER	1 INCH	GROUND WATER DEPTH	5.05 FT		
NO. OF WELLS IN CLUSTER	3	(STATIC WATER LEVEL DEPTH)			

MEASUREMENTS TAKEN FROM:

- [ ] ground surface
- [x] top of casing

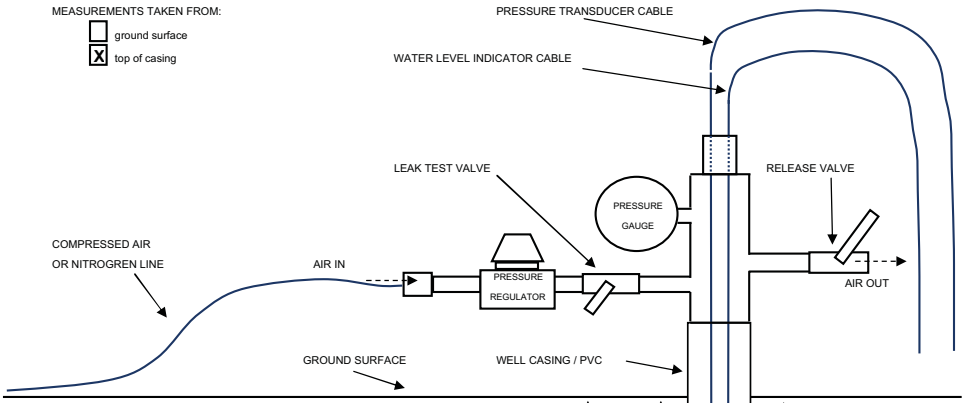

LEGEND:

DTB	DEPTH TO BOTTOM OF WELL FROM GROUND SURFACE	11.00	FT
DTS	DEPTH TO WELL SCREEN FROM GROUND SURFACE	8.50	FT
DTW	DEPTH TO STATIC WATER LEVEL FROM GROUND SURFACE	5.05	FT
WC	WATER COLUMN HEIGHT	5.95	FT
CH	CHANGE IN HEAD AFTER PRESSURIZATION	3.45	FT
AS	WATER COLUMN ABOVE SCREEN	3.45	FT

DTB	11.00	FT
− **DTW**	5.05	FT
= **WC**	5.95	FT
DTS	8.50	FT
− **DTW**	5.05	FT
= **AS**	3.45	FT
AS	3.45	FT
− SAFE MARGIN	0.00	FT
= **CH**	3.45	FT
CH	3.45	FT
+ **DTW**	5.05	FT
=WATER LEVEL INDICATOR DEPTH	8.50	FT
CH / 2.31 =	1.49	PSI
= PRESSURE APPLIED TO WELL HEAD		
DTW	5.05	FT
+ TRANSDUCER READING	5.502	FT
= TRANSDUCER DEPTH	10.55	FT

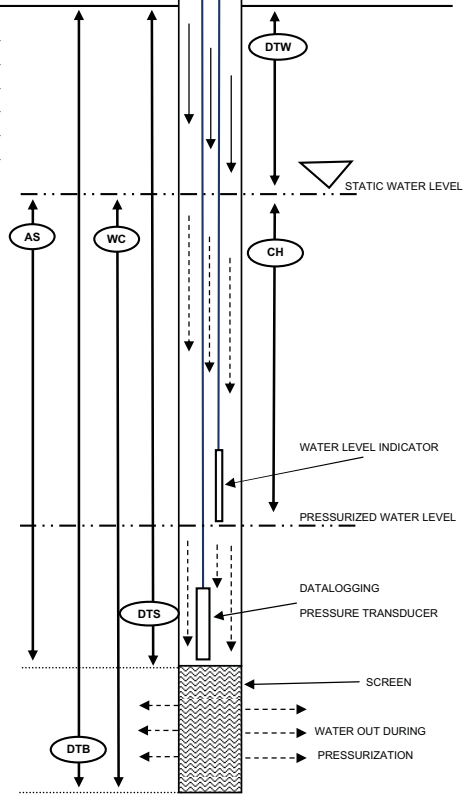

Time Test Start	13:39	
Transducer Reading at test start	5.502	FT
Time of Pressurization	13:39	
Time of Equilibrium	13:41	
Equilibrium Transducer Reading	6.444	FT
Time of Pressure Release	13:41	
Time Test Stop	13:44	

NOTES:

Due to the minimal extent of the water column above the screen in this well, the well was pressurized to drive the water column to the midpoint of the screen (8.5 ft b/g)

Note that DTS for this test is the midpoint of the well screen.

Results of this test will be compared with sustained yield test (administered with a peristaltic pump) results for this well.

PNEUMATIC SLUG TEST LOG

GZA GEOENVIRONMENTAL OF NEW YORK 440 NINTH AVENUE, 18th FLOOR NEW YORK, NEW YORK 10001 SCIENTISTS AND ENGINEERS	Client Entergy Indian Point Energy Center	WELL ID	MW - 57 - 20
		TEST NO.	1 of 2
		FILE NO.	41.0017869.01
		PROJECT LOCATION	Indian Point

GZA ENGINEER	Angela Hough	BORING COORDINATES	N 462888.8986	E	604562.8559
GZA ENGINEER	Sara Covelli	GROUND SURFACE EL.(FT)	14.98	DATUM	NGVD 29
GZA ENGINEER	Rick Ponti	TOP OF CASING EL.(FT)	14.75	DATE	12/26/06
		WELL DEPTH (FT)	20.5		
WELL DIAMETER	1 INCH	GROUND WATER DEPTH	5.63 FT		
NO. OF WELLS IN CLUSTER	3	(STATIC WATER LEVEL DEPTH)			

MEASUREMENTS TAKEN FROM:

- [ ] ground surface
- [x] top of casing

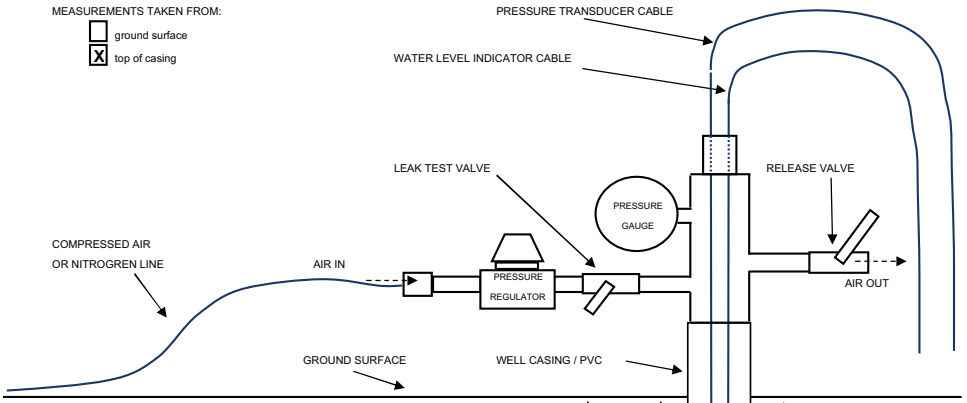

LEGEND:

DTB	DEPTH TO BOTTOM OF WELL FROM GROUND SURFACE	20.50	FT
DTS	DEPTH TO WELL SCREEN FROM GROUND SURFACE	15.50	FT
DTW	DEPTH TO STATIC WATER LEVEL FROM GROUND SURFACE	5.63	FT
WC	WATER COLUMN HEIGHT	14.87	FT
CH	CHANGE IN HEAD AFTER PRESSURIZATION	6.87	FT
AS	WATER COLUMN ABOVE SCREEN	9.87	FT

DTB	20.50	FT
− **DTW**	5.63	FT
= **WC**	14.87	FT
DTS	15.50	FT
− **DTW**	5.63	FT
= **AS**	9.87	FT
AS	9.87	FT
− SAFE MARGIN	3.00	FT
= **CH**	6.87	FT
CH	6.87	FT
+ **DTW**	5.63	FT
=WATER LEVEL INDICATOR DEPTH	12.50	FT
CH / 2.31 =	2.97	PSI
= PRESSURE APPLIED TO WELL HEAD		
DTW	5.63	FT
+ TRANSDUCER READING	11.772	FT
= TRANSDUCER DEPTH	17.40	FT

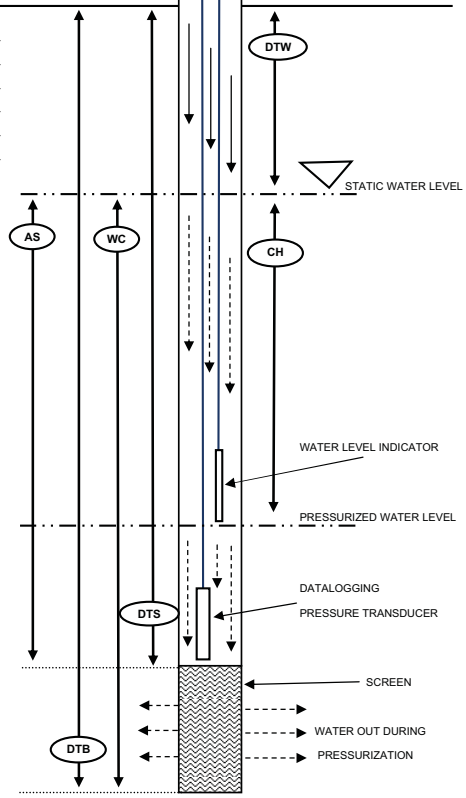

Time Test Start	11:07	
Transducer Reading at test start	11.829	FT
Time of Pressurization	11:07	
Time of Equilibrium	11:15	
Equilibrium Transducer Reading	11.865	FT
Time of Pressure Release	11:15	
Time Test Stop	11:18	

NOTES:

Air leak was detected and resolved upon initial pressurization.

PNEUMATIC SLUG TEST LOG

GZA GEOENVIRONMENTAL OF NEW YORK 440 NINTH AVENUE, 18th FLOOR NEW YORK, NEW YORK 10001 SCIENTISTS AND ENGINEERS	Client Entergy Indian Point Energy Center	WELL ID	MW - 57 - 20
		TEST NO.	2 of 2
		FILE NO.	41.0017869.01
		PROJECT LOCATION	Indian Point

GZA ENGINEER	Angela Hough	BORING COORDINATES	N 462888.8986	E	604562.8559
GZA ENGINEER	Sara Covelli	GROUND SURFACE EL.(FT)	14.98	DATUM	NGVD 29
GZA ENGINEER	Rick Ponti	TOP OF CASING EL.(FT)	14.75	DATE	12/26/06
		WELL DEPTH (FT)	20.5		
WELL DIAMETER	1 INCH	GROUND WATER DEPTH	5.64 FT		
NO. OF WELLS IN CLUSTER	3	(STATIC WATER LEVEL DEPTH)			

MEASUREMENTS TAKEN FROM:

- [ ] ground surface
- [x] top of casing

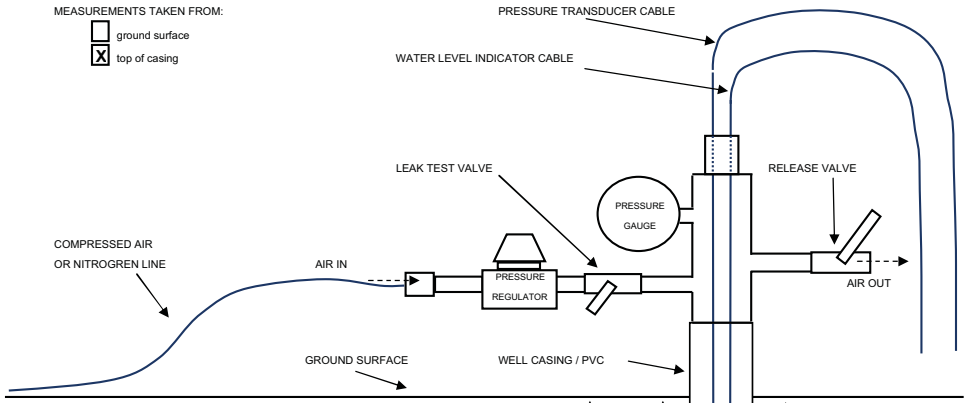

LEGEND:

DTB	DEPTH TO BOTTOM OF WELL FROM GROUND SURFACE	20.50	FT
DTS	DEPTH TO WELL SCREEN FROM GROUND SURFACE	15.50	FT
DTW	DEPTH TO STATIC WATER LEVEL FROM GROUND SURFACE	5.64	FT
WC	WATER COLUMN HEIGHT	14.86	FT
CH	CHANGE IN HEAD AFTER PRESSURIZATION	6.86	FT
AS	WATER COLUMN ABOVE SCREEN	9.86	FT

DTB	20.50	FT
− **DTW**	5.64	FT
= **WC**	14.86	FT
DTS	15.50	FT
− **DTW**	5.64	FT
= **AS**	9.86	FT
AS	9.86	FT
− SAFE MARGIN	3.00	FT
= **CH**	6.86	FT
CH	6.86	FT
+ **DTW**	5.64	FT
=WATER LEVEL INDICATOR DEPTH	12.50	FT
CH / 2.31 =	2.97	PSI
= PRESSURE APPLIED TO WELL HEAD		
DTW	5.64	FT
+ TRANSDUCER READING	11.772	FT
= TRANSDUCER DEPTH	17.41	FT

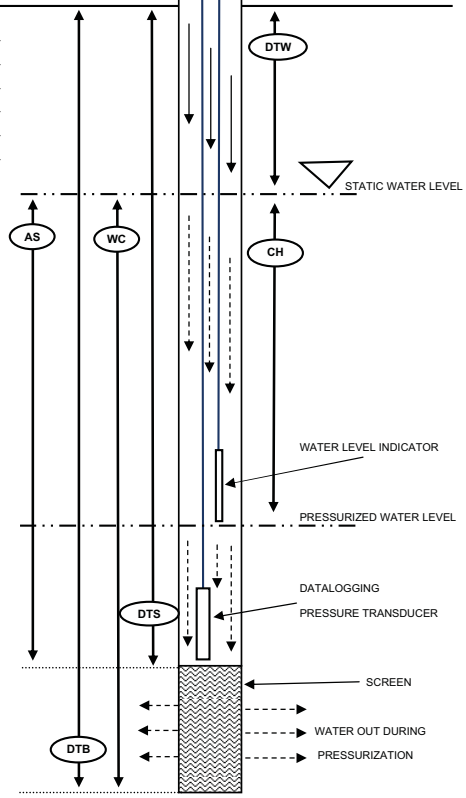

Time Test Start	11:21	
Transducer Reading at test start	11.841	FT
Time of Pressurization	11:21	
Time of Equilibrium	11:25	
Equilibrium Transducer Reading	11.866	FT
Time of Pressure Release	11:25	
Time Test Stop	11:30	

NOTES:

PNEUMATIC SLUG TEST LOG

GZA GEOENVIRONMENTAL OF NEW YORK 440 NINTH AVENUE, 18th FLOOR NEW YORK, NEW YORK 10001 SCIENTISTS AND ENGINEERS	Client Entergy Indian Point Energy Center	WELL ID	MW - 57 - 45
		TEST NO.	1 of 2
		FILE NO.	41.0017869.01
		PROJECT LOCATION	Indian Point

GZA ENGINEER	Angela Hough	BORING COORDINATES	N 462888.6589	E	604562.8432
GZA ENGINEER	Sara Covelli	GROUND SURFACE EL.(FT)	14.98	DATUM	NGVD 29
GZA ENGINEER		TOP OF CASING EL.(FT)	14.81	DATE	12/26/06
		WELL DEPTH (FT)	45.5		
WELL DIAMETER	1 INCH	GROUND WATER DEPTH	6.29 FT		
NO. OF WELLS IN CLUSTER	3	(STATIC WATER LEVEL DEPTH)			

MEASUREMENTS TAKEN FROM:

- [ ] ground surface
- [x] top of casing

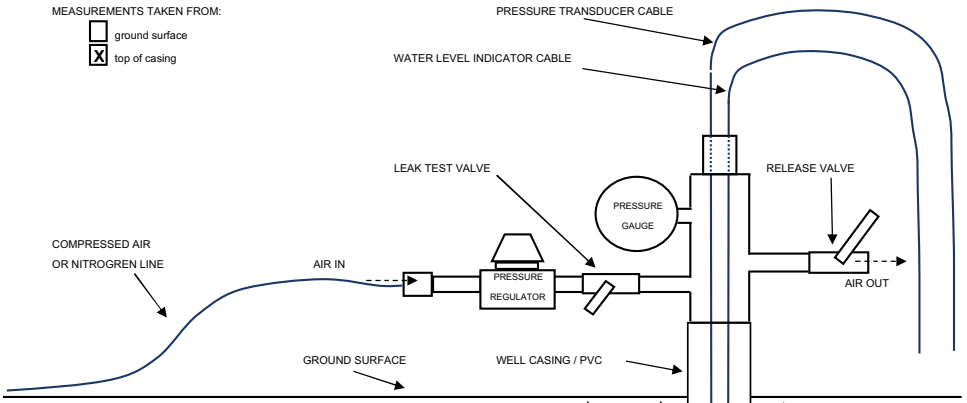

LEGEND:

DTB	DEPTH TO BOTTOM OF WELL FROM GROUND SURFACE	45.50	FT
DTS	DEPTH TO WELL SCREEN FROM GROUND SURFACE	30.50	FT
DTW	DEPTH TO STATIC WATER LEVEL FROM GROUND SURFACE	6.29	FT
WC	WATER COLUMN HEIGHT	39.21	FT
CH	CHANGE IN HEAD AFTER PRESSURIZATION	19.21	FT
AS	WATER COLUMN ABOVE SCREEN	24.21	FT

DTB	45.50	FT
− **DTW**	6.29	FT
= **WC**	39.21	FT
DTS	30.50	FT
− **DTW**	6.29	FT
= **AS**	24.21	FT
AS	24.21	FT
− SAFE MARGIN	5.00	FT
= **CH**	19.21	FT
CH	19.21	FT
+ **DTW**	6.29	FT
=WATER LEVEL INDICATOR DEPTH	25.50	FT
CH / 2.31 =	8.32	PSI
= PRESSURE APPLIED TO WELL HEAD		
DTW	6.29	FT
+ TRANSDUCER READING	38.856	FT
= TRANSDUCER DEPTH	45.15	FT

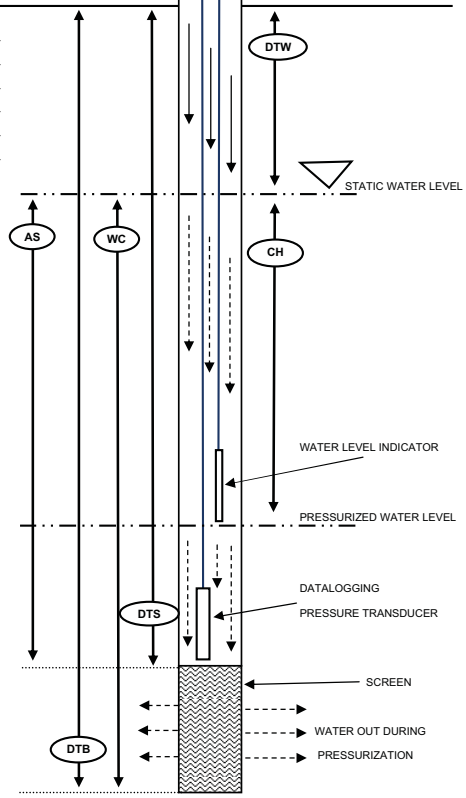

Time Test Start	9:19	
Transducer Reading at test start	38.856	FT
Time of Pressurization	9:19	
Time of Equilibrium	9:32	
Equilibrium Transducer Reading	38.879	FT
Time of Pressure Release	9:33	
Time Test Stop	10:04	

NOTES:

PNEUMATIC SLUG TEST LOG

GZA GEOENVIRONMENTAL OF NEW YORK 440 NINTH AVENUE, 18th FLOOR NEW YORK, NEW YORK 10001 SCIENTISTS AND ENGINEERS	Client Entergy Indian Point Energy Center	WELL ID	MW - 57 - 45
		TEST NO.	2 of 2
		FILE NO.	41.0017869.01
		PROJECT LOCATION	Indian Point

GZA ENGINEER	Angela Hough	BORING COORDINATES	N 462888.6589	E	604562.8432
GZA ENGINEER	Sara Covelli	GROUND SURFACE EL.(FT)	14.98	DATUM	NGVD 29
GZA ENGINEER		TOP OF CASING EL.(FT)	14.81	DATE	12/26/06
		WELL DEPTH (FT)	45.5		
WELL DIAMETER	1 INCH	GROUND WATER DEPTH	6.33 FT		
NO. OF WELLS IN CLUSTER	3	(STATIC WATER LEVEL DEPTH)			

MEASUREMENTS TAKEN FROM:

- [ ] ground surface
- [x] top of casing

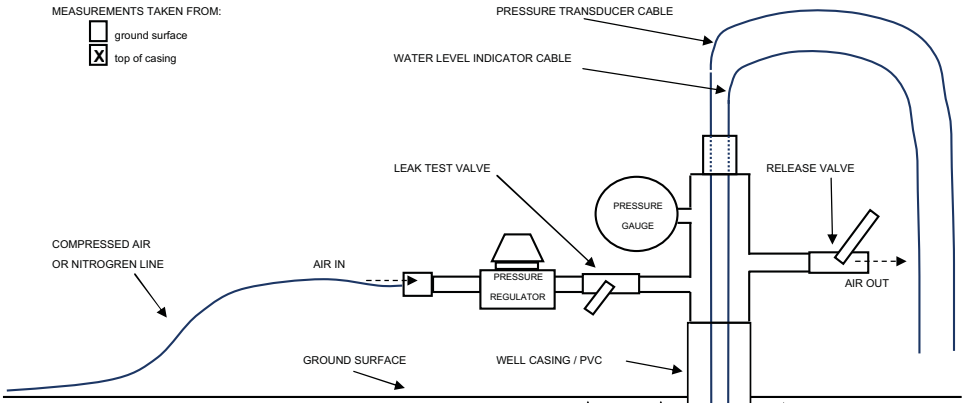

LEGEND:

DTB	DEPTH TO BOTTOM OF WELL FROM GROUND SURFACE	45.50	FT
DTS	DEPTH TO WELL SCREEN FROM GROUND SURFACE	30.50	FT
DTW	DEPTH TO STATIC WATER LEVEL FROM GROUND SURFACE	6.33	FT
WC	WATER COLUMN HEIGHT	39.17	FT
CH	CHANGE IN HEAD AFTER PRESSURIZATION	19.17	FT
AS	WATER COLUMN ABOVE SCREEN	24.17	FT

DTB	45.50	FT
− **DTW**	6.33	FT
= **WC**	39.17	FT
DTS	30.50	FT
− **DTW**	6.33	FT
= **AS**	24.17	FT
AS	24.17	FT
− SAFE MARGIN	5.00	FT
= **CH**	19.17	FT
CH	19.17	FT
+ **DTW**	6.33	FT
=WATER LEVEL INDICATOR DEPTH	25.50	FT
CH / 2.31 =	8.30	PSI
= PRESSURE APPLIED TO WELL HEAD		
DTW	6.33	FT
+ TRANSDUCER READING	38.856	FT
= TRANSDUCER DEPTH	45.19	FT

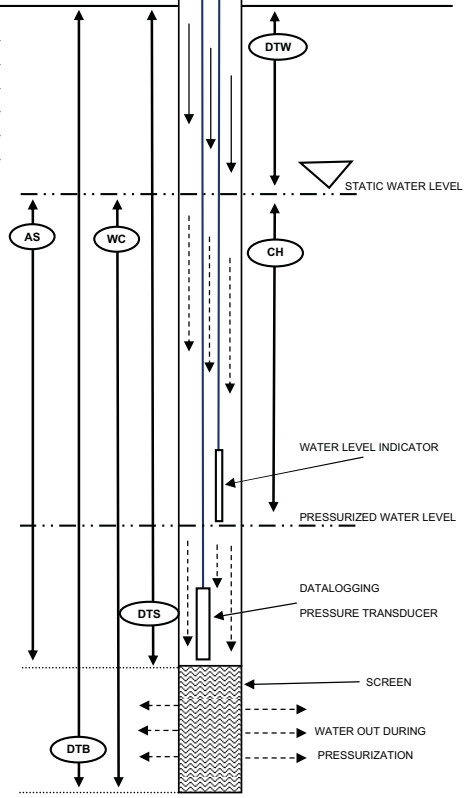

Time Test Start	10:07	
Transducer Reading at test start	38.881	FT
Time of Pressurization	10:07	
Time of Equilibrium	10:22	
Equilibrium Transducer Reading	38.889	FT
Time of Pressure Release	10:24	
Time Test Stop	10:40	

NOTES:

PNEUMATIC SLUG TEST LOG

GZA GEOENVIRONMENTAL OF NEW YORK 440 NINTH AVENUE, 18th FLOOR NEW YORK, NEW YORK 10001 SCIENTISTS AND ENGINEERS	Client Entergy Indian Point Energy Center	WELL ID	MW - 58 - 65
		TEST NO.	1 of 2
		FILE NO.	41.0017869.01
		PROJECT LOCATION	Indian Point

GZA ENGINEER	Angela Hough	BORING COORDINATES	N 462863.8071	E	604399.7201
GZA ENGINEER	Sara Covelli	GROUND SURFACE EL.(FT)	14.57	DATUM	NGVD 29
GZA ENGINEER		TOP OF CASING EL.(FT)	14.25	DATE	1/2/07
		WELL DEPTH (FT)	65		
WELL DIAMETER	1 INCH	GROUND WATER DEPTH	7.42 FT		
NO. OF WELLS IN CLUSTER	2	(STATIC WATER LEVEL DEPTH)			

MEASUREMENTS TAKEN FROM:

- [ ] ground surface
- [x] top of casing

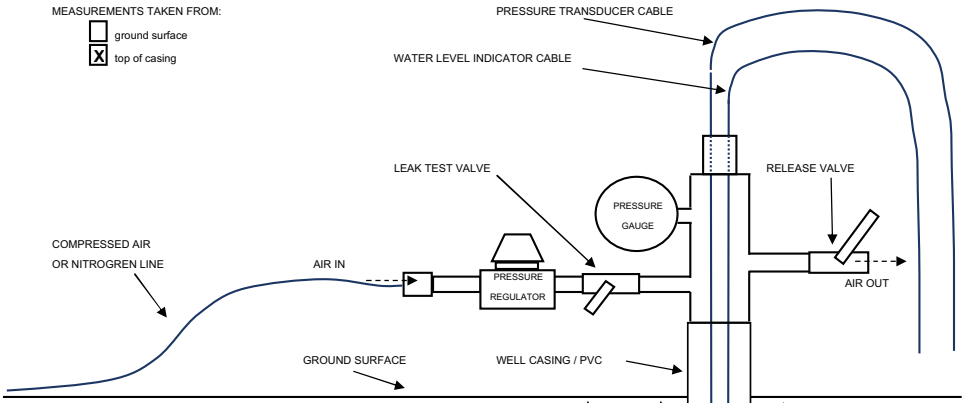

LEGEND:

DTB	DEPTH TO BOTTOM OF WELL FROM GROUND SURFACE	65.00	FT
DTS	DEPTH TO WELL SCREEN FROM GROUND SURFACE	50.00	FT
DTW	DEPTH TO STATIC WATER LEVEL FROM GROUND SURFACE	7.42	FT
WC	WATER COLUMN HEIGHT	57.58	FT
CH	CHANGE IN HEAD AFTER PRESSURIZATION	32.58	FT
AS	WATER COLUMN ABOVE SCREEN	42.58	FT

DTB	65.00	FT
− **DTW**	7.42	FT
= **WC**	57.58	FT
DTS	50.00	FT
− **DTW**	7.42	FT
= **AS**	42.58	FT
AS	42.58	FT
− SAFE MARGIN	10.00	FT
= **CH**	32.58	FT
CH	32.58	FT
+ **DTW**	7.42	FT
=WATER LEVEL INDICATOR DEPTH	40.00	FT
CH / 2.31 =	14.10	PSI
= PRESSURE APPLIED TO WELL HEAD		
DTW	7.42	FT
+ TRANSDUCER READING	36.586	FT
= TRANSDUCER DEPTH	44.01	FT

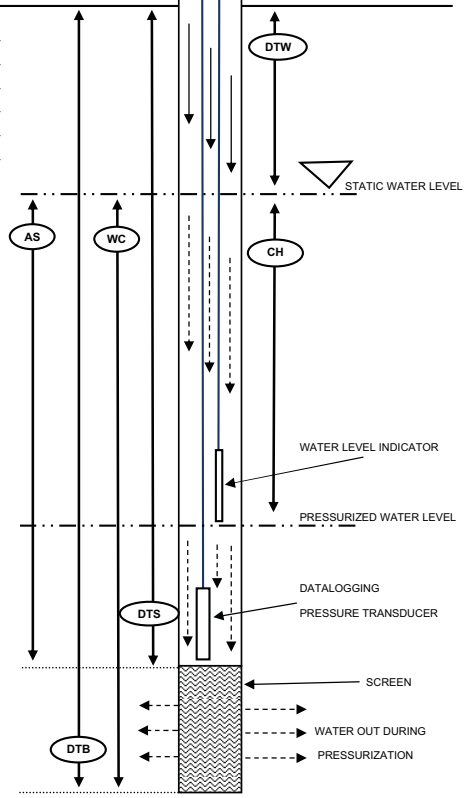

Time Test Start	10:11	
Transducer Reading at test start	36.605	FT
Time of Pressurization	10:12	
Time of Equilibrium	10:18	
Equilibrium Transducer Reading	36.592	FT
Time of Pressure Release	10:19	
Time Test Stop	10:26	

NOTES:

PNEUMATIC SLUG TEST LOG

GZA GEOENVIRONMENTAL OF NEW YORK 440 NINTH AVENUE, 18th FLOOR NEW YORK, NEW YORK 10001 SCIENTISTS AND ENGINEERS	Client Entergy Indian Point Energy Center	WELL ID	MW - 58 - 65
		TEST NO.	2 of 2
		FILE NO.	41.0017869.01
		PROJECT LOCATION	Indian Point

GZA ENGINEER	Angela Hough	BORING COORDINATES	N 462863.8071	E	604399.7201
GZA ENGINEER	Sara Covelli	GROUND SURFACE EL.(FT)	14.57	DATUM	NGVD 29
GZA ENGINEER		TOP OF CASING EL.(FT)	14.25	DATE	1/2/07
		WELL DEPTH (FT)	65		
WELL DIAMETER	1 INCH	GROUND WATER DEPTH	7.42 FT		
NO. OF WELLS IN CLUSTER	2	(STATIC WATER LEVEL DEPTH)			

MEASUREMENTS TAKEN FROM:

- [ ] ground surface
- [x] top of casing

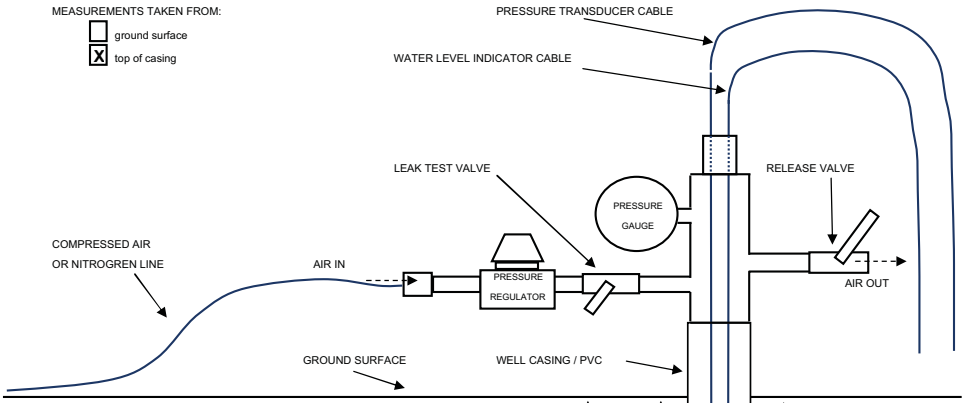

LEGEND:

DTB	DEPTH TO BOTTOM OF WELL FROM GROUND SURFACE	65.00	FT
DTS	DEPTH TO WELL SCREEN FROM GROUND SURFACE	50.00	FT
DTW	DEPTH TO STATIC WATER LEVEL FROM GROUND SURFACE	7.42	FT
WC	WATER COLUMN HEIGHT	57.58	FT
CH	CHANGE IN HEAD AFTER PRESSURIZATION	32.58	FT
AS	WATER COLUMN ABOVE SCREEN	42.58	FT

DTB	65.00	FT
− **DTW**	7.42	FT
= **WC**	57.58	FT
DTS	50.00	FT
− **DTW**	7.42	FT
= **AS**	42.58	FT
AS	42.58	FT
− SAFE MARGIN	10.00	FT
= **CH**	32.58	FT
CH	32.58	FT
+ **DTW**	7.42	FT
=WATER LEVEL INDICATOR DEPTH	40.00	FT
CH / 2.31 =	14.10	PSI
= PRESSURE APPLIED TO WELL HEAD		
DTW	7.42	FT
+ TRANSDUCER READING	36.586	FT
= TRANSDUCER DEPTH	44.01	FT

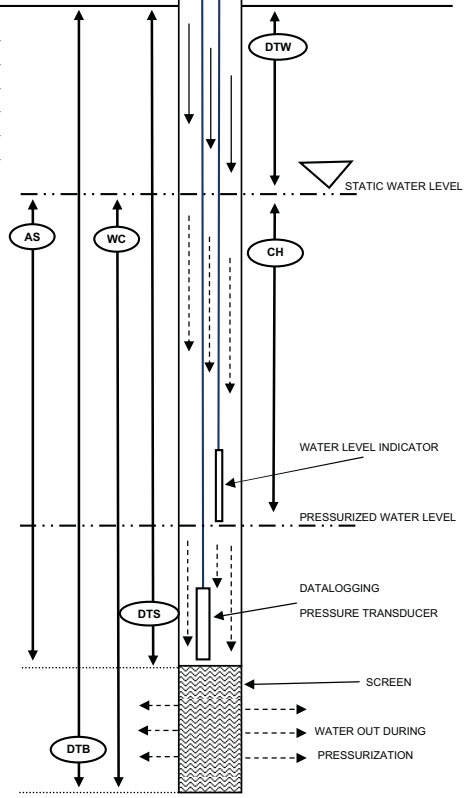

Time Test Start	10:26	
Transducer Reading at test start	36.549	FT
Time of Pressurization	10:27	
Time of Equilibrium	10:32	
Equilibrium Transducer Reading	36.632	FT
Time of Pressure Release	10:33	
Time Test Stop	10:42	

NOTES:

PNEUMATIC SLUG TEST LOG

GZA GEOENVIRONMENTAL OF NEW YORK 440 NINTH AVENUE, 18th FLOOR NEW YORK, NEW YORK 10001 SCIENTISTS AND ENGINEERS	Client Entergy Indian Point Energy Center	WELL ID	MW - 59 - 31
		TEST NO.	1 of 2
		FILE NO.	41.0017869.01
		PROJECT LOCATION	Indian Point

GZA ENGINEER	Angela Hough	BORING COORDINATES	N 462912.0301	E	604329.0351
GZA ENGINEER	Rick Ponti	GROUND SURFACE EL.(FT)	14.52	DATUM	NGVD 29
GZA ENGINEER	Sara Covelli	TOP OF CASING EL.(FT)	14.41	DATE	12/26/06
		WELL DEPTH (FT)	31		
WELL DIAMETER	1 INCH	GROUND WATER DEPTH	11.64 FT		
NO. OF WELLS IN CLUSTER	3	(STATIC WATER LEVEL DEPTH)			

MEASUREMENTS TAKEN FROM:

- [ ] ground surface
- [x] top of casing

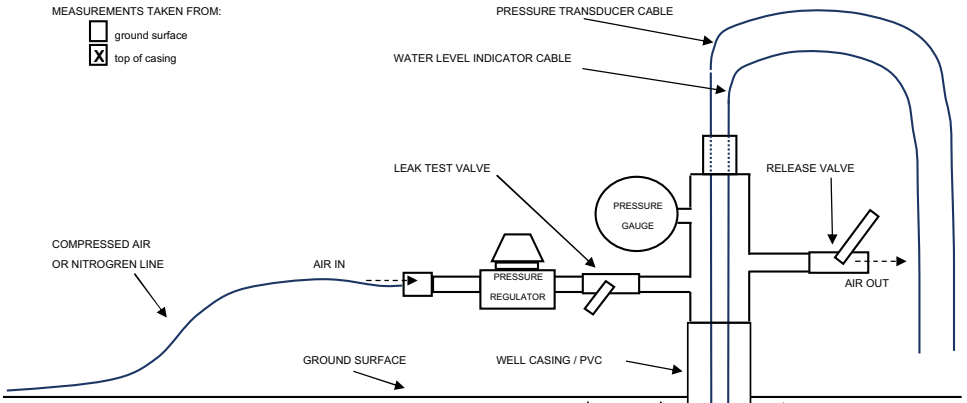

LEGEND:

DTB	DEPTH TO BOTTOM OF WELL FROM GROUND SURFACE	31.00	FT
DTS	DEPTH TO WELL SCREEN FROM GROUND SURFACE	21.00	FT
DTW	DEPTH TO STATIC WATER LEVEL FROM GROUND SURFACE	11.64	FT
WC	WATER COLUMN HEIGHT	19.36	FT
CH	CHANGE IN HEAD AFTER PRESSURIZATION	6.36	FT
AS	WATER COLUMN ABOVE SCREEN	9.36	FT

DTB	31.00	FT
− **DTW**	11.64	FT
= **WC**	19.36	FT
DTS	21.00	FT
− **DTW**	11.64	FT
= **AS**	9.36	FT
AS	9.36	FT
− SAFE MARGIN	3.00	FT
= **CH**	6.36	FT
CH	6.36	FT
+ **DTW**	11.64	FT
=WATER LEVEL INDICATOR DEPTH	18.00	FT
CH / 2.31 =	2.75	PSI
= PRESSURE APPLIED TO WELL HEAD		
DTW	11.64	FT
+ TRANSDUCER READING	7.389	FT
= TRANSDUCER DEPTH	19.03	FT

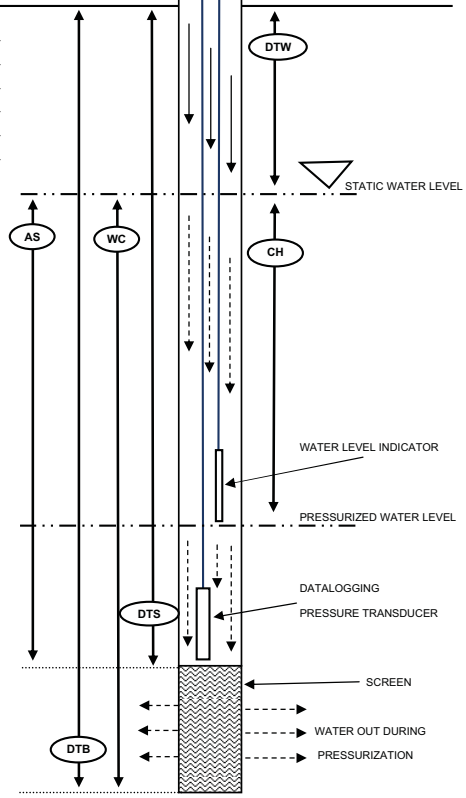

Time Test Start	14:28	
Transducer Reading at test start	7.389	FT
Time of Pressurization	14:30	
Time of Equilibrium	14:33	
Equilibrium Transducer Reading	7.504	FT
Time of Pressure Release	14:33	
Time Test Stop	14:34	

NOTES:

False start occurred at 14:28. Upon pressurization, a leak was detected. The well head was depressurized and the leak was resolved.
Pressurization for actual test began at 14:30.

PNEUMATIC SLUG TEST LOG

GZA GEOENVIRONMENTAL OF NEW YORK 440 NINTH AVENUE, 18th FLOOR NEW YORK, NEW YORK 10001 SCIENTISTS AND ENGINEERS	Client Entergy Indian Point Energy Center	WELL ID	MW - 59 - 31
		TEST NO.	2 of 2
		FILE NO.	41.0017869.01
		PROJECT LOCATION	Indian Point

GZA ENGINEER	Angela Hough	BORING COORDINATES	N 462912.0301	E	604329.0351
GZA ENGINEER	Rick Ponti	GROUND SURFACE EL.(FT)	14.52	DATUM	NGVD 29
GZA ENGINEER	Sara Covelli	TOP OF CASING EL.(FT)	14.41	DATE	12/26/06
		WELL DEPTH (FT)	31		
WELL DIAMETER	1 INCH	GROUND WATER DEPTH	11.64 FT		
NO. OF WELLS IN CLUSTER	3	(STATIC WATER LEVEL DEPTH)			

MEASUREMENTS TAKEN FROM:

- [ ] ground surface
- [x] top of casing

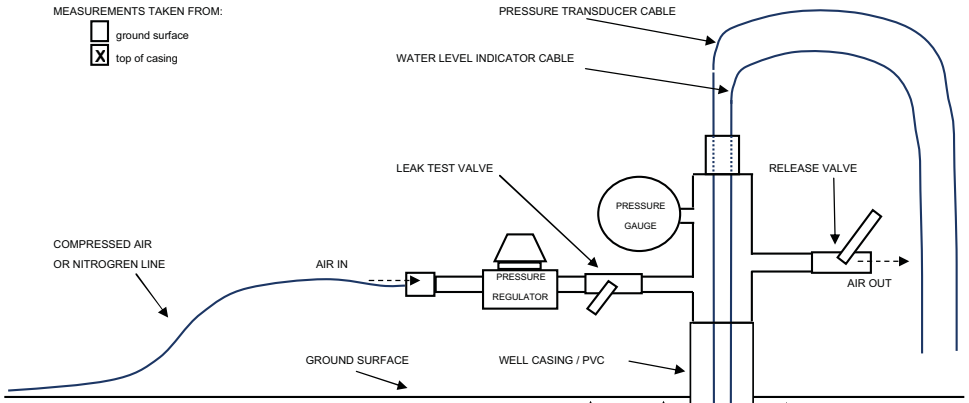

LEGEND:

DTB	DEPTH TO BOTTOM OF WELL FROM GROUND SURFACE	31.00	FT
DTS	DEPTH TO WELL SCREEN FROM GROUND SURFACE	21.00	FT
DTW	DEPTH TO STATIC WATER LEVEL FROM GROUND SURFACE	11.64	FT
WC	WATER COLUMN HEIGHT	19.36	FT
CH	CHANGE IN HEAD AFTER PRESSURIZATION	6.36	FT
AS	WATER COLUMN ABOVE SCREEN	9.36	FT

DTB	31.00	FT
− **DTW**	11.64	FT
= **WC**	19.36	FT
DTS	21.00	FT
− **DTW**	11.64	FT
= **AS**	9.36	FT
AS	9.36	FT
− SAFE MARGIN	3.00	FT
= **CH**	6.36	FT
CH	6.36	FT
+ **DTW**	11.64	FT
=WATER LEVEL INDICATOR DEPTH	18.00	FT
CH / 2.31 =	2.75	PSI
= PRESSURE APPLIED TO WELL HEAD		
DTW	11.64	FT
+ TRANSDUCER READING	7.504	FT
= TRANSDUCER DEPTH	19.14	FT

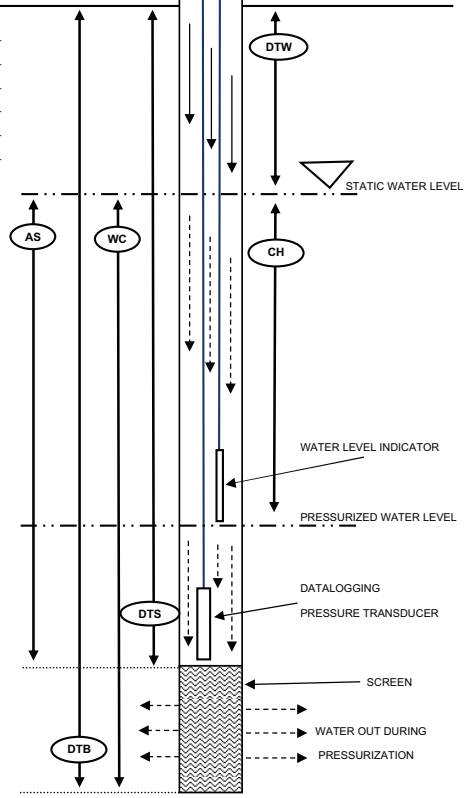

Time Test Start	14:34	
Transducer Reading at test start	7.504	FT
Time of Pressurization	14:34	
Time of Equilibrium	14:35	
Equilibrium Transducer Reading	7.527	FT
Time of Pressure Release	14:36	
Time Test Stop	14:37	

NOTES:

PNEUMATIC SLUG TEST LOG

GZA GEOENVIRONMENTAL OF NEW YORK 440 NINTH AVENUE, 18th FLOOR NEW YORK, NEW YORK 10001 SCIENTISTS AND ENGINEERS	Client Entergy Indian Point Energy Center	WELL ID	MW - 59 - 45
		TEST NO.	1 of 4
		FILE NO.	41.0017869.01
		PROJECT LOCATION	Indian Point

GZA ENGINEER	Angela Hough	BORING COORDINATES	N 462912.1268	E	604329.1342
GZA ENGINEER	Rick Ponti	GROUND SURFACE EL.(FT)	14.52	DATUM	NGVD 29
GZA ENGINEER		TOP OF CASING EL.(FT)	13.90	DATE	12/21/06
		WELL DEPTH (FT)	45		
WELL DIAMETER	1 INCH	GROUND WATER DEPTH	10.58 FT		
NO. OF WELLS IN CLUSTER	3	(STATIC WATER LEVEL DEPTH)			

MEASUREMENTS TAKEN FROM:

- [ ] ground surface
- [x] top of casing

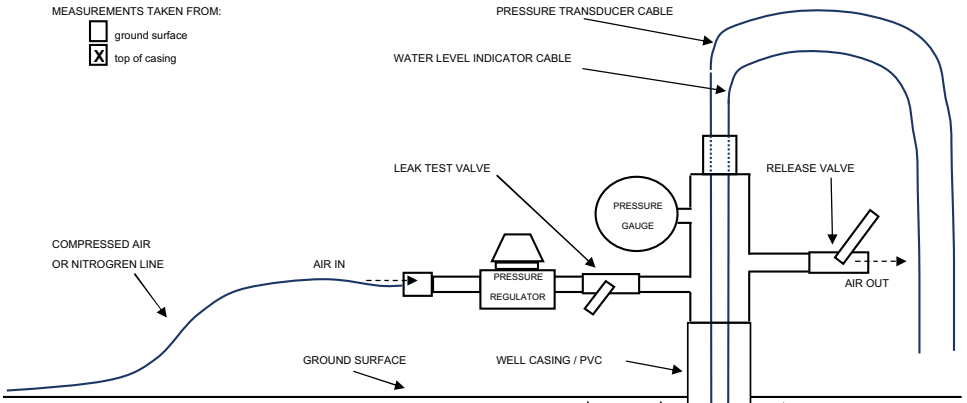

LEGEND:

DTB	DEPTH TO BOTTOM OF WELL FROM GROUND SURFACE	45.00	FT
DTS	DEPTH TO WELL SCREEN FROM GROUND SURFACE	40.00	FT
DTW	DEPTH TO STATIC WATER LEVEL FROM GROUND SURFACE	10.58	FT
WC	WATER COLUMN HEIGHT	34.42	FT
CH	CHANGE IN HEAD AFTER PRESSURIZATION	27.42	FT
AS	WATER COLUMN ABOVE SCREEN	29.42	FT

DTB	45.00	FT
− **DTW**	10.58	FT
= **WC**	34.42	FT
DTS	40.00	FT
− **DTW**	10.58	FT
= **AS**	29.42	FT
AS	29.42	FT
− SAFE MARGIN	2.00	FT
= **CH**	27.42	FT
CH	27.42	FT
+ **DTW**	10.58	FT
=WATER LEVEL INDICATOR DEPTH	38.00	FT
CH / 2.31 =	11.87	PSI
= PRESSURE APPLIED TO WELL HEAD		
DTW	10.58	FT
+ TRANSDUCER READING	23.696	FT
= TRANSDUCER DEPTH	34.28	FT

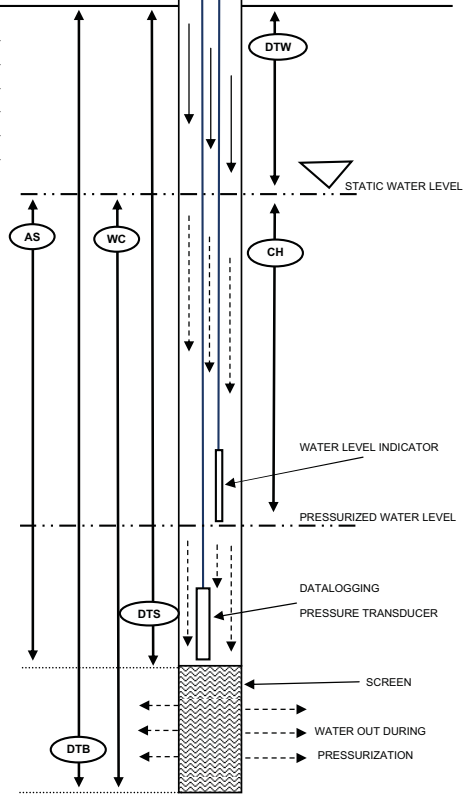

Time Test Start	11:21	
Transducer Reading at test start	23.696	FT
Time of Pressurization	11:21	
Time of Equilibrium	11:26	
Equilibrium Transducer Reading	NA	FT
Time of Pressure Release	11:26	
Time Test Stop	11:36	

NOTES:

PNEUMATIC SLUG TEST LOG

GZA GEOENVIRONMENTAL OF NEW YORK 440 NINTH AVENUE, 18th FLOOR NEW YORK, NEW YORK 10001 SCIENTISTS AND ENGINEERS	Client Entergy Indian Point Energy Center	WELL ID	MW - 59 - 45
		TEST NO.	2 of 4
		FILE NO.	41.0017869.01
		PROJECT LOCATION	Indian Point

GZA ENGINEER	Angela Hough	BORING COORDINATES	N 462912.1268	E	604329.1342
GZA ENGINEER	Rick Ponti	GROUND SURFACE EL.(FT)	14.52	DATUM	NGVD 29
GZA ENGINEER		TOP OF CASING EL.(FT)	13.90	DATE	12/21/06
		WELL DEPTH (FT)	45		
WELL DIAMETER	1 INCH	GROUND WATER DEPTH	10.58 FT		
NO. OF WELLS IN CLUSTER	3	(STATIC WATER LEVEL DEPTH)			

MEASUREMENTS TAKEN FROM:

- [ ] ground surface
- [x] top of casing

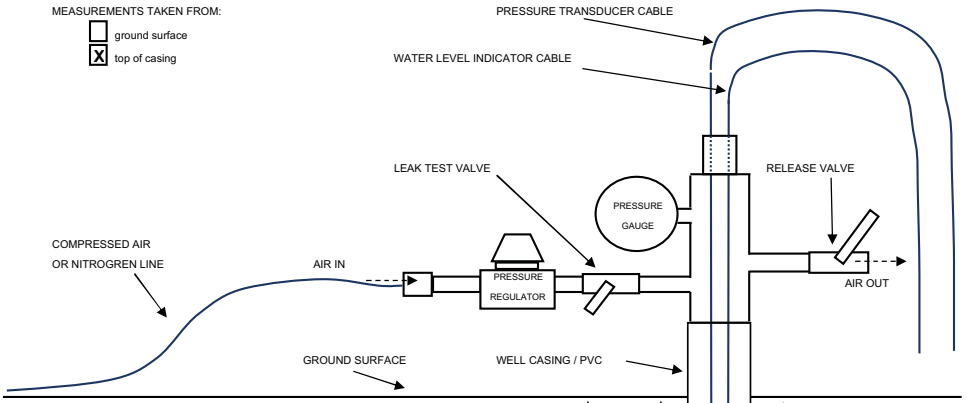

LEGEND:

DTB	DEPTH TO BOTTOM OF WELL FROM GROUND SURFACE	45.00	FT
DTS	DEPTH TO WELL SCREEN FROM GROUND SURFACE	40.00	FT
DTW	DEPTH TO STATIC WATER LEVEL FROM GROUND SURFACE	10.58	FT
WC	WATER COLUMN HEIGHT	34.42	FT
CH	CHANGE IN HEAD AFTER PRESSURIZATION	27.42	FT
AS	WATER COLUMN ABOVE SCREEN	29.42	FT

DTB	45.00	FT
− **DTW**	10.58	FT
= **WC**	34.42	FT
DTS	40.00	FT
− **DTW**	10.58	FT
= **AS**	29.42	FT
AS	29.42	FT
− SAFE MARGIN	2.00	FT
= **CH**	27.42	FT
CH	27.42	FT
+ **DTW**	10.58	FT
=WATER LEVEL INDICATOR DEPTH	38.00	FT
CH / 2.31 =	11.87	PSI
= PRESSURE APPLIED TO WELL HEAD		
DTW	10.58	FT
+ TRANSDUCER READING	23.696	FT
= TRANSDUCER DEPTH	34.28	FT

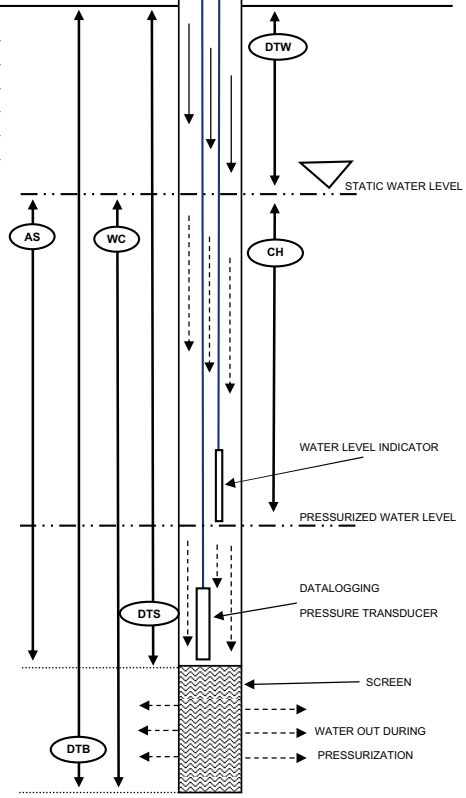

Time Test Start	11:36	
Transducer Reading at test start	23.668	FT
Time of Pressurization	11:36	
Time of Equilibrium	11:44	
Equilibrium Transducer Reading	23.672	FT
Time of Pressure Release	11:44	
Time Test Stop	11:48	

NOTES:

PNEUMATIC SLUG TEST LOG

GZA GEOENVIRONMENTAL OF NEW YORK 440 NINTH AVENUE, 18th FLOOR NEW YORK, NEW YORK 10001 SCIENTISTS AND ENGINEERS	Client Entergy Indian Point Energy Center	WELL ID	MW - 59 - 45
		TEST NO.	3 of 4
		FILE NO.	41.0017869.01
		PROJECT LOCATION	Indian Point

GZA ENGINEER	Angela Hough	BORING COORDINATES	N 462912.1268	E	604329.1342
GZA ENGINEER	Rick Ponti	GROUND SURFACE EL.(FT)	14.52	DATUM	NGVD 29
GZA ENGINEER		TOP OF CASING EL.(FT)	13.90	DATE	12/21/06
		WELL DEPTH (FT)	45		
WELL DIAMETER	1 INCH	GROUND WATER DEPTH	10.58 FT		
NO. OF WELLS IN CLUSTER	3	(STATIC WATER LEVEL DEPTH)			

MEASUREMENTS TAKEN FROM:

- [ ] ground surface
- [x] top of casing

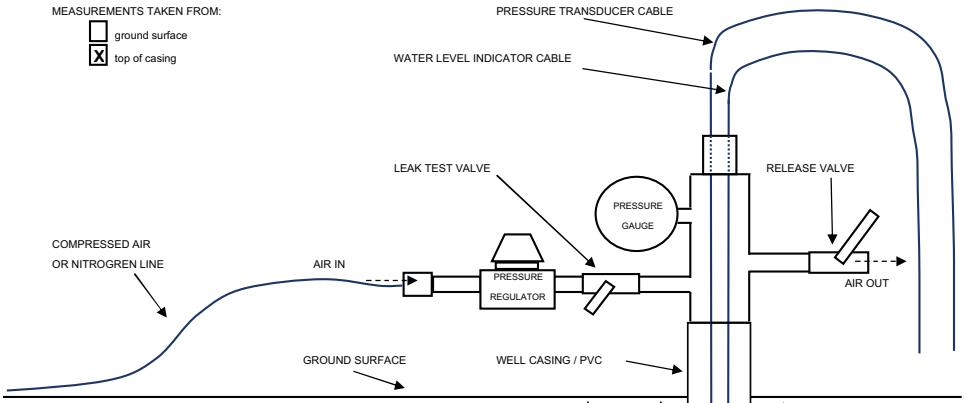

LEGEND:

DTB	DEPTH TO BOTTOM OF WELL FROM GROUND SURFACE	45.00	FT
DTS	DEPTH TO WELL SCREEN FROM GROUND SURFACE	36.00	FT
DTW	DEPTH TO STATIC WATER LEVEL FROM GROUND SURFACE	10.58	FT
WC	WATER COLUMN HEIGHT	34.42	FT
CH	CHANGE IN HEAD AFTER PRESSURIZATION	22.42	FT
AS	WATER COLUMN ABOVE SCREEN	25.42	FT

DTB	45.00	FT
− **DTW**	10.58	FT
= **WC**	34.42	FT
DTS	36.00	FT
− **DTW**	10.58	FT
= **AS**	25.42	FT
AS	25.42	FT
− SAFE MARGIN	3.00	FT
= **CH**	22.42	FT
CH	22.42	FT
+ **DTW**	10.58	FT
=WATER LEVEL INDICATOR DEPTH	33.00	FT
CH / 2.31 =	9.71	PSI
= PRESSURE APPLIED TO WELL HEAD		
DTW	10.58	FT
+ TRANSDUCER READING	23.696	FT
= TRANSDUCER DEPTH	34.28	FT

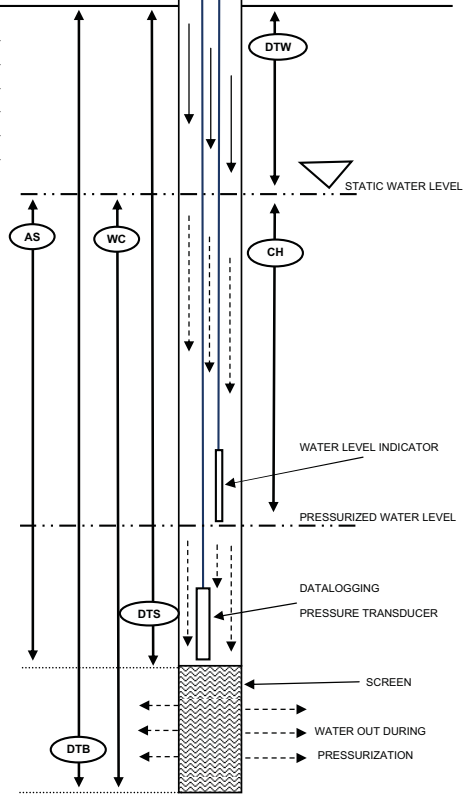

Time Test Start	11:48	
Transducer Reading at test start	23.608	FT
Time of Pressurization	11:49	
Time of Equilibrium	11:50	
Equilibrium Transducer Reading	25.684	FT
Time of Pressure Release	11:50	
Time Test Stop	11:56	

NOTES:

False start (pressurization) at 11:48. Pressure released at 11:49 and restarted.

PNEUMATIC SLUG TEST LOG

GZA GEOENVIRONMENTAL OF NEW YORK 440 NINTH AVENUE, 18th FLOOR NEW YORK, NEW YORK 10001 SCIENTISTS AND ENGINEERS	Client Entergy Indian Point Energy Center	WELL ID	MW - 59 - 45
		TEST NO.	4 of 4
		FILE NO.	41.0017869.01
		PROJECT LOCATION	Indian Point

GZA ENGINEER	Angela Hough	BORING COORDINATES	N 462912.1268	E	604329.1342
GZA ENGINEER	Rick Ponti	GROUND SURFACE EL.(FT)	14.52	DATUM	IPEC
GZA ENGINEER		TOP OF CASING EL.(FT)	13.90	DATE	12/21/06
		WELL DEPTH (FT)	45		
WELL DIAMETER	1 INCH	GROUND WATER DEPTH	10.58 FT		
NO. OF WELLS IN CLUSTER	3	(STATIC WATER LEVEL DEPTH)			

MEASUREMENTS TAKEN FROM:

- [ ] ground surface
- [x] top of casing

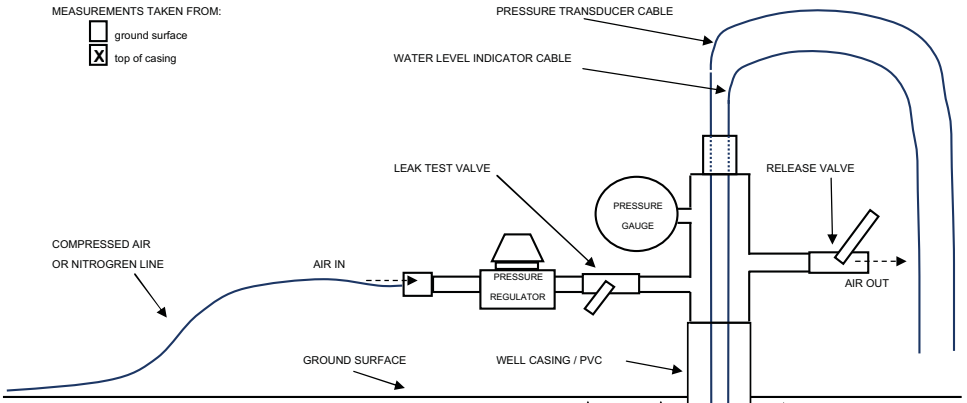

LEGEND:

DTB	DEPTH TO BOTTOM OF WELL FROM GROUND SURFACE	45.00	FT
DTS	DEPTH TO WELL SCREEN FROM GROUND SURFACE	36.00	FT
DTW	DEPTH TO STATIC WATER LEVEL FROM GROUND SURFACE	10.58	FT
WC	WATER COLUMN HEIGHT	34.42	FT
CH	CHANGE IN HEAD AFTER PRESSURIZATION	22.42	FT
AS	WATER COLUMN ABOVE SCREEN	25.42	FT

DTB	45.00	FT
− **DTW**	10.58	FT
= **WC**	34.42	FT
DTS	36.00	FT
− **DTW**	10.58	FT
= **AS**	25.42	FT
AS	25.42	FT
− SAFE MARGIN	3.00	FT
= **CH**	22.42	FT
CH	22.42	FT
+ **DTW**	10.58	FT
=WATER LEVEL INDICATOR DEPTH	33.00	FT
CH / 2.31 =	9.71	PSI
= PRESSURE APPLIED TO WELL HEAD		
DTW	10.58	FT
+ TRANSDUCER READING	23.696	FT
= TRANSDUCER DEPTH	34.28	FT

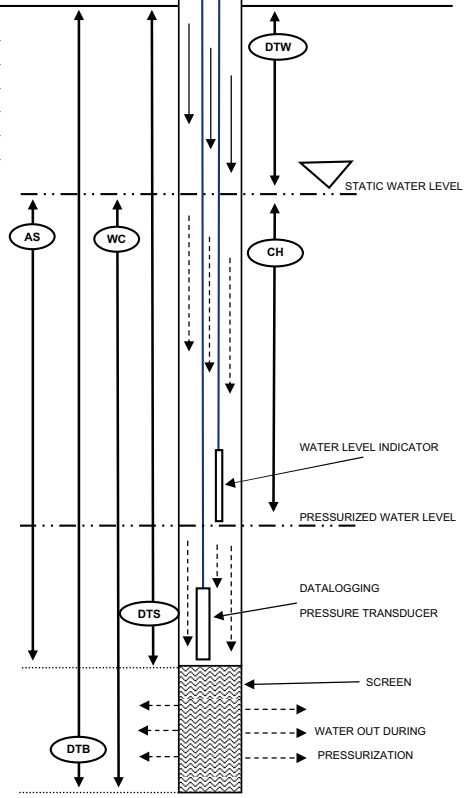

Time Test Start	11:56	
Transducer Reading at test start	23.579	FT
Time of Pressurization	11:56	
Time of Equilibrium	12:00	
Equilibrium Transducer Reading	24.207	FT
Time of Pressure Release	12:00	
Time Test Stop	12:04	

NOTES:

PNEUMATIC SLUG TEST LOG

GZA GEOENVIRONMENTAL OF NEW YORK 440 NINTH AVENUE, 18th FLOOR NEW YORK, NEW YORK 10001 SCIENTISTS AND ENGINEERS	Client Entergy Indian Point Energy Center	WELL ID	MW - 59 - 68
		TEST NO.	3 of 3
		FILE NO.	41.0017869.01
		PROJECT LOCATION	Indian Point

GZA ENGINEER	Angela Hough	BORING COORDINATES	N 462911.9136	E	604328.9969
GZA ENGINEER	Rick Ponti	GROUND SURFACE EL.(FT)	14.52	DATUM	NGVD 29
GZA ENGINEER		TOP OF CASING EL.(FT)	14.23	DATE	12/21/06
		WELL DEPTH (FT)	68		
WELL DIAMETER	1 INCH	GROUND WATER DEPTH	10.99 FT		
NO. OF WELLS IN CLUSTER	3	(STATIC WATER LEVEL DEPTH)			

MEASUREMENTS TAKEN FROM:

- [ ] ground surface
- [x] top of casing

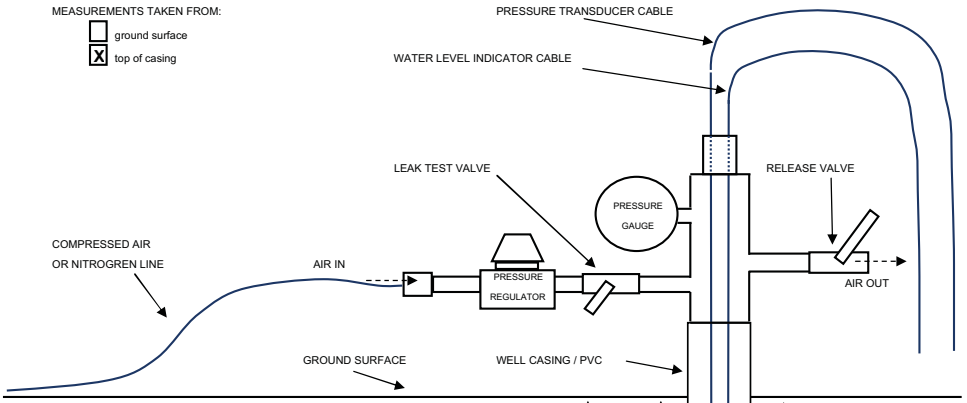

LEGEND:

DTB	DEPTH TO BOTTOM OF WELL FROM GROUND SURFACE	68.00	FT
DTS	DEPTH TO WELL SCREEN FROM GROUND SURFACE	53.00	FT
DTW	DEPTH TO STATIC WATER LEVEL FROM GROUND SURFACE	10.99	FT
WC	WATER COLUMN HEIGHT	57.01	FT
CH	CHANGE IN HEAD AFTER PRESSURIZATION	41.01	FT
AS	WATER COLUMN ABOVE SCREEN	42.01	FT

DTB	68.00	FT
− **DTW**	10.99	FT
= **WC**	57.01	FT
DTS	53.00	FT
− **DTW**	10.99	FT
= **AS**	42.01	FT
AS	42.01	FT
− SAFE MARGIN	1.00	FT
= **CH**	41.01	FT
CH	41.01	FT
+ **DTW**	10.99	FT
=WATER LEVEL INDICATOR DEPTH	52.00	FT
CH / 2.31 =	17.75	PSI
= PRESSURE APPLIED TO WELL HEAD		
DTW	10.99	FT
+ TRANSDUCER READING	45.027	FT
= TRANSDUCER DEPTH	56.02	FT

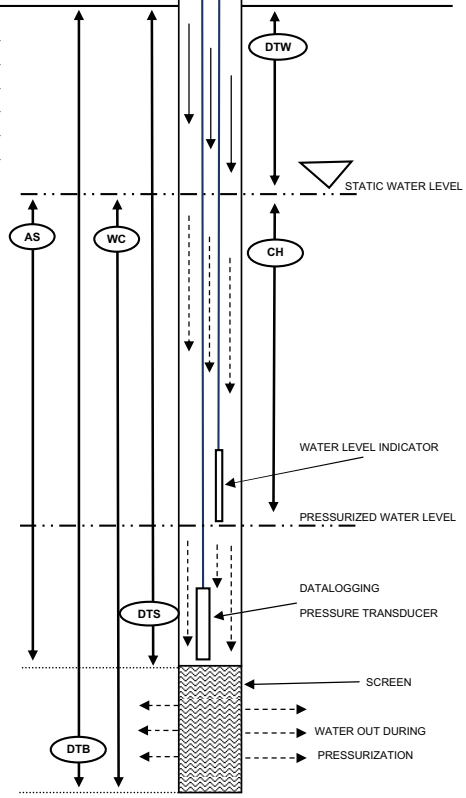

Time Test Start	14:15	
Transducer Reading at test start	44.224	FT
Time of Pressurization	14:15	
Time of Equilibrium	14:22	
Equilibrium Transducer Reading	44.179	FT
Time of Pressure Release	14:22	
Time Test Stop	14:30	

NOTES:

PNEUMATIC SLUG TEST LOG

GZA GEOENVIRONMENTAL OF NEW YORK 440 NINTH AVENUE, 18th FLOOR NEW YORK, NEW YORK 10001 SCIENTISTS AND ENGINEERS	Client Entergy Indian Point Energy Center	WELL ID	MW - 59 - 68
		TEST NO.	1 of 3
		FILE NO.	41.0017869.01
		PROJECT LOCATION	Indian Point

GZA ENGINEER	Angela Hough	BORING COORDINATES	N 462911.9136	E	604328.9969
GZA ENGINEER	Rick Ponti	GROUND SURFACE EL.(FT)	14.52	DATUM	NGVD 29
GZA ENGINEER		TOP OF CASING EL.(FT)	14.23	DATE	12/21/06
		WELL DEPTH (FT)	68		
WELL DIAMETER	1 INCH	GROUND WATER DEPTH	10.99 FT		
NO. OF WELLS IN CLUSTER	3	(STATIC WATER LEVEL DEPTH)			

MEASUREMENTS TAKEN FROM:

- [ ] ground surface
- [x] top of casing

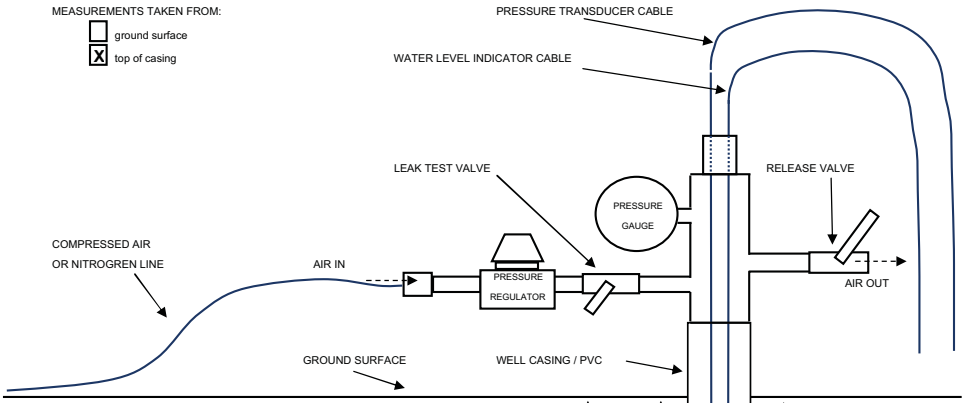

LEGEND:

DTB	DEPTH TO BOTTOM OF WELL FROM GROUND SURFACE	68.00	FT
DTS	DEPTH TO WELL SCREEN FROM GROUND SURFACE	53.00	FT
DTW	DEPTH TO STATIC WATER LEVEL FROM GROUND SURFACE	10.99	FT
WC	WATER COLUMN HEIGHT	57.01	FT
CH	CHANGE IN HEAD AFTER PRESSURIZATION	41.01	FT
AS	WATER COLUMN ABOVE SCREEN	42.01	FT

DTB	68.00	FT
− **DTW**	10.99	FT
= **WC**	57.01	FT
DTS	53.00	FT
− **DTW**	10.99	FT
= **AS**	42.01	FT
AS	42.01	FT
− SAFE MARGIN	1.00	FT
= **CH**	41.01	FT
CH	41.01	FT
+ **DTW**	10.99	FT
=WATER LEVEL INDICATOR DEPTH	52.00	FT
CH / 2.31 =	17.75	PSI
= PRESSURE APPLIED TO WELL HEAD		
DTW	10.99	FT
+ TRANSDUCER READING	45.027	FT
= TRANSDUCER DEPTH	56.02	FT

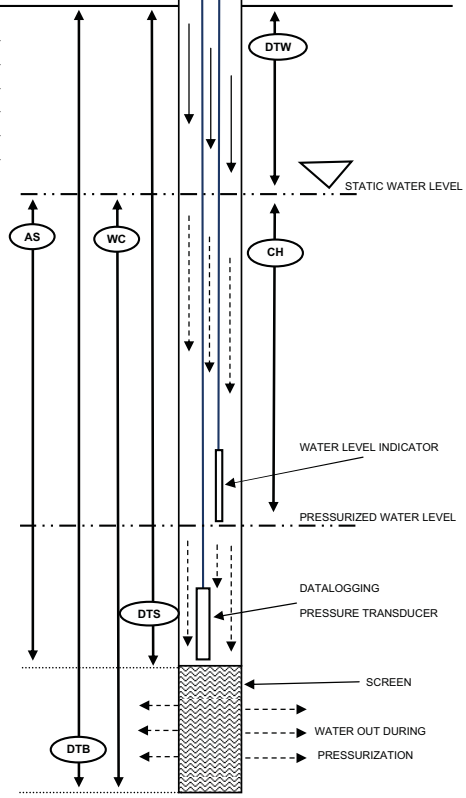

Time Test Start	13:30	
Transducer Reading at test start	45.027	FT
Time of Pressurization	13:31	
Time of Equilibrium	13:38	
Equilibrium Transducer Reading	48.334	FT
Time of Pressure Release	13:38	
Time Test Stop	13:48	

NOTES:

PNEUMATIC SLUG TEST LOG

GZA GEOENVIRONMENTAL OF NEW YORK 440 NINTH AVENUE, 18th FLOOR NEW YORK, NEW YORK 10001 SCIENTISTS AND ENGINEERS	Client Entergy Indian Point Energy Center	WELL ID	MW - 59 - 68
		TEST NO.	2 of 3
		FILE NO.	41.0017869.01
		PROJECT LOCATION	Indian Point

GZA ENGINEER	Angela Hough	BORING COORDINATES	N 462911.9136	E	604328.9969
GZA ENGINEER	Rick Ponti	GROUND SURFACE EL.(FT)	14.52	DATUM	NGVD 29
GZA ENGINEER		TOP OF CASING EL.(FT)	14.23	DATE	12/21/06
		WELL DEPTH (FT)	68		
WELL DIAMETER	1 INCH	GROUND WATER DEPTH	10.99 FT		
NO. OF WELLS IN CLUSTER	3	(STATIC WATER LEVEL DEPTH)			

MEASUREMENTS TAKEN FROM:

- [ ] ground surface
- [x] top of casing

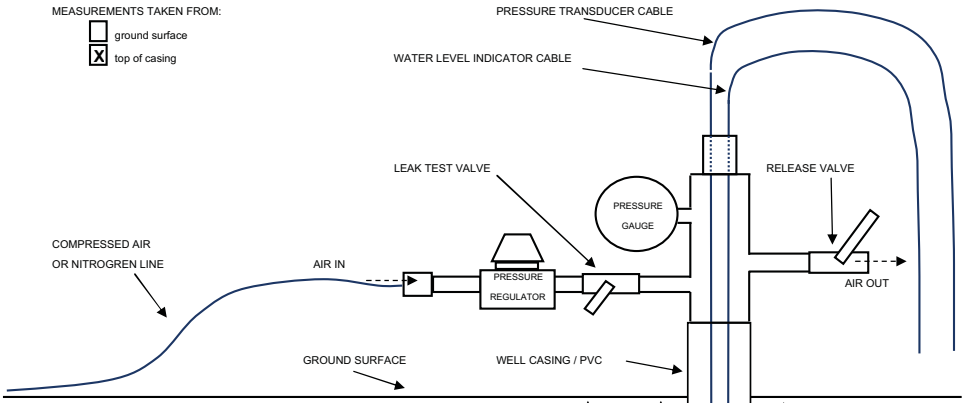

LEGEND:

DTB	DEPTH TO BOTTOM OF WELL FROM GROUND SURFACE	68.00	FT
DTS	DEPTH TO WELL SCREEN FROM GROUND SURFACE	53.00	FT
DTW	DEPTH TO STATIC WATER LEVEL FROM GROUND SURFACE	10.99	FT
WC	WATER COLUMN HEIGHT	57.01	FT
CH	CHANGE IN HEAD AFTER PRESSURIZATION	41.01	FT
AS	WATER COLUMN ABOVE SCREEN	42.01	FT

DTB	68.00	FT
− **DTW**	10.99	FT
= **WC**	57.01	FT
DTS	53.00	FT
− **DTW**	10.99	FT
= **AS**	42.01	FT
AS	42.01	FT
− SAFE MARGIN	1.00	FT
= **CH**	41.01	FT
CH	41.01	FT
+ **DTW**	10.99	FT
=WATER LEVEL INDICATOR DEPTH	52.00	FT
CH / 2.31 =	17.75	PSI
= PRESSURE APPLIED TO WELL HEAD		
DTW	10.99	FT
+ TRANSDUCER READING	45.027	FT
= TRANSDUCER DEPTH	56.02	FT

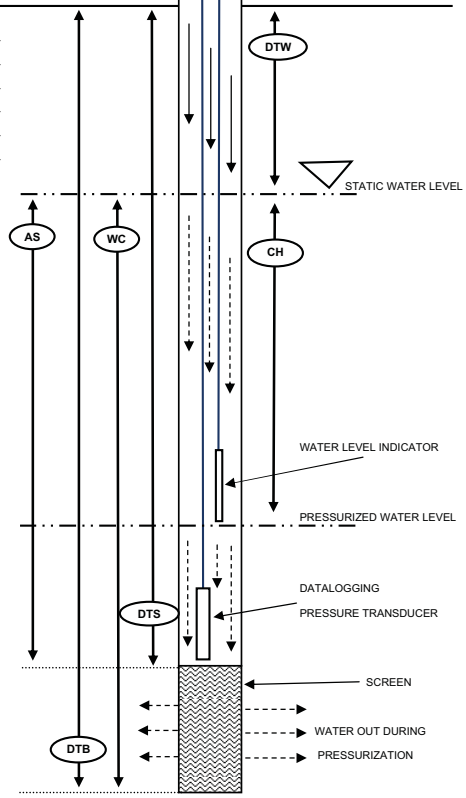

Time Test Start	13:48	
Transducer Reading at test start	44.525	FT
Time of Pressurization	13:48	
Time of Equilibrium	14:00	
Equilibrium Transducer Reading	45.120	FT
Time of Pressure Release	14:00	
Time Test Stop	14:15	

NOTES:

PNEUMATIC SLUG TEST LOG

GZA GEOENVIRONMENTAL OF NEW YORK 440 NINTH AVENUE, 18th FLOOR NEW YORK, NEW YORK 10001 SCIENTISTS AND ENGINEERS	Client Entergy Indian Point Energy Center	WELL ID	MW - 62 - 38
		TEST NO.	1 of 1
		FILE NO.	41.0017869.10
		PROJECT LOCATION	Indian Point

GZA ENGINEER	Angela Hough	BORING COORDINATES	N 463087.4034	E	604349.9123
GZA ENGINEER		GROUND SURFACE EL.(FT)	14.69	DATUM	NGVD 29
GZA ENGINEER		TOP OF CASING EL.(FT)	12.89	DATE	5/16/07
		WELL DEPTH (FT)	38.30		
WELL DIAMETER	1 INCH	GROUND WATER DEPTH	13.51 FT		
NO. OF WELLS IN CLUSTER	2 + Borehole	(STATIC WATER LEVEL DEPTH)			

MEASUREMENTS TAKEN FROM:

- [ ] ground surface
- [x] top of casing

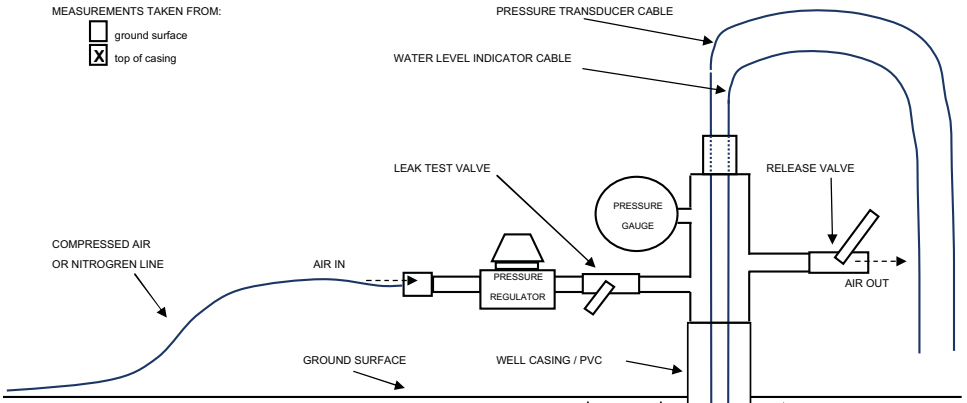

LEGEND:

DTB	DEPTH TO BOTTOM OF WELL FROM GROUND SURFACE	38.30	FT
DTS	DEPTH TO WELL SCREEN FROM GROUND SURFACE	33.30	FT
DTW	DEPTH TO STATIC WATER LEVEL FROM GROUND SURFACE	13.51	FT
WC	WATER COLUMN HEIGHT	24.79	FT
CH	CHANGE IN HEAD AFTER PRESSURIZATION	10.00	FT
AS	WATER COLUMN ABOVE SCREEN	19.79	FT

DTB	38.30	FT
− **DTW**	13.51	FT
= **WC**	24.79	FT
DTS	33.30	FT
− **DTW**	13.51	FT
= **AS**	19.79	FT
AS	19.79	FT
− SAFE MARGIN	9.79	FT
= **CH**	10.00	FT
CH	10.00	FT
+ **DTW**	13.51	FT
=WATER LEVEL INDICATOR DEPTH	23.51	FT
CH / 2.31 =	4.33	PSI
= PRESSURE APPLIED TO WELL HEAD		
DTW**	13.51	FT
+ TRANSDUCER READING	24.641	FT
= TRANSDUCER DEPTH	38.15	FT

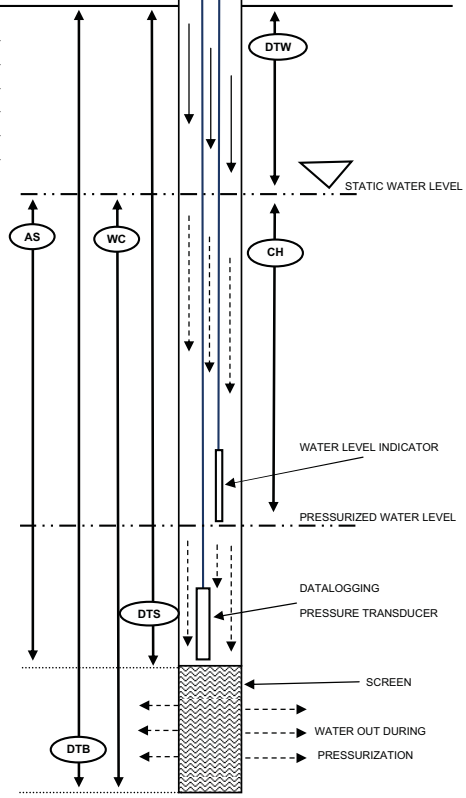

Time Test Start	8:58	
Transducer Reading at test start	24.668	FT
Time of Pressurization	9:00	
Time of Equilibrium	9:05	
Equilibrium Transducer Reading	24.694	FT
Time of Pressure Release	9:05	
Time Test Stop	9:08	

NOTES:

PNEUMATIC SLUG TEST LOG

GZA GEOENVIRONMENTAL OF NEW YORK 440 NINTH AVENUE, 18th FLOOR NEW YORK, NEW YORK 10001 SCIENTISTS AND ENGINEERS	Client Entergy Indian Point Energy Center	WELL ID	MW - 62 - 38
		TEST NO.	1 of 1
		FILE NO.	41.0017869.10
		PROJECT LOCATION	Indian Point

GZA ENGINEER	Angela Hough	BORING COORDINATES	N 463087.4034	E	604349.9123
GZA ENGINEER		GROUND SURFACE EL.(FT)	14.69	DATUM	NGVD 29
GZA ENGINEER		TOP OF CASING EL.(FT)	12.89	DATE	5/16/07
		WELL DEPTH (FT)	38.30		
WELL DIAMETER	1 INCH	GROUND WATER DEPTH	13.51 FT		
NO. OF WELLS IN CLUSTER	2 + Borehole	(STATIC WATER LEVEL DEPTH)			

MEASUREMENTS TAKEN FROM:

- [ ] ground surface
- [x] top of casing

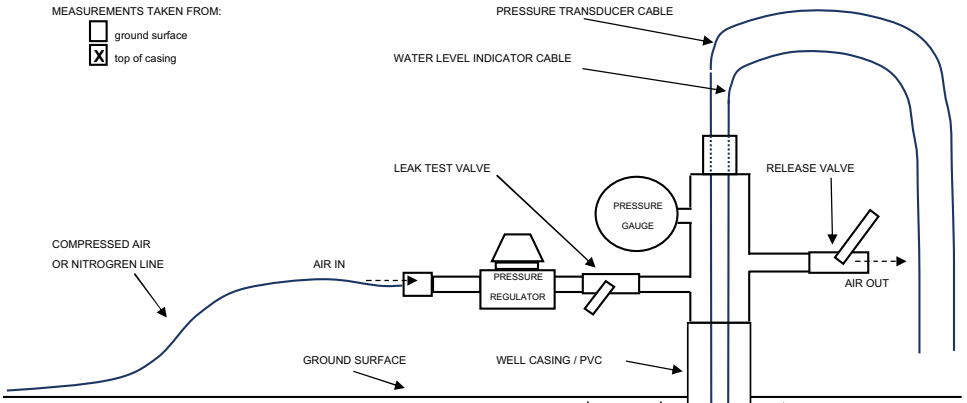

LEGEND:

DTB	DEPTH TO BOTTOM OF WELL FROM GROUND SURFACE	38.30	FT
DTS	DEPTH TO WELL SCREEN FROM GROUND SURFACE	33.30	FT
DTW	DEPTH TO STATIC WATER LEVEL FROM GROUND SURFACE	13.51	FT
WC	WATER COLUMN HEIGHT	24.79	FT
CH	CHANGE IN HEAD AFTER PRESSURIZATION	10.00	FT
AS	WATER COLUMN ABOVE SCREEN	19.79	FT

DTB	38.30	FT
− **DTW**	13.51	FT
= **WC**	24.79	FT
DTS	33.30	FT
− **DTW**	13.51	FT
= **AS**	19.79	FT
AS	19.79	FT
− SAFE MARGIN	9.79	FT
= **CH**	10.00	FT
CH	10.00	FT
+ **DTW**	13.51	FT
=WATER LEVEL INDICATOR DEPTH	23.51	FT
CH / 2.31 =	4.33	PSI
= PRESSURE APPLIED TO WELL HEAD		
DTW**	13.51	FT
+ TRANSDUCER READING	24.641	FT
= TRANSDUCER DEPTH	38.15	FT

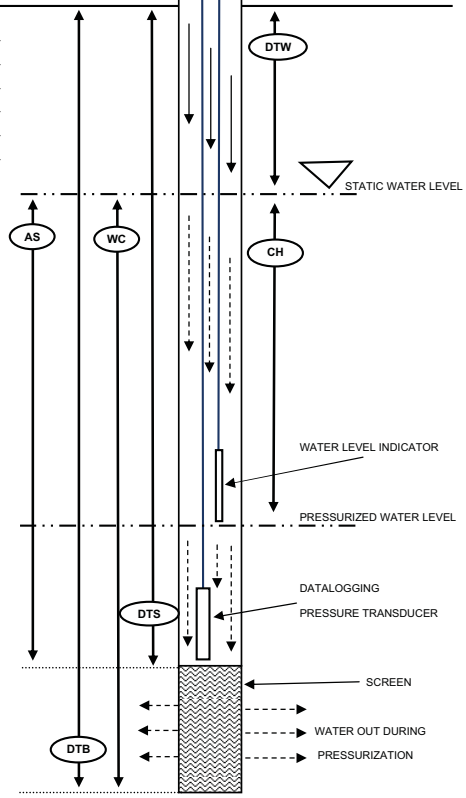

Time Test Start	9:09	
Transducer Reading at test start	24.692	FT
Time of Pressurization	9:09	
Time of Equilibrium	9:15	
Equilibrium Transducer Reading	24.774	FT
Time of Pressure Release	9:15	
Time Test Stop	9:19	

NOTES:

PNEUMATIC SLUG TEST LOG

GZA GEOENVIRONMENTAL OF NEW YORK 440 NINTH AVENUE, 18th FLOOR NEW YORK, NEW YORK 10001 SCIENTISTS AND ENGINEERS	Client Entergy Indian Point Energy Center	WELL ID	MW - 62 - 38
		TEST NO.	1 of 1
		FILE NO.	41.0017869.10
		PROJECT LOCATION	Indian Point

GZA ENGINEER	Angela Hough	BORING COORDINATES	N 463087.4034	E	604349.9123
GZA ENGINEER		GROUND SURFACE EL.(FT)	14.69	DATUM	NGVD 29
GZA ENGINEER		TOP OF CASING EL.(FT)	12.89	DATE	5/16/07
		WELL DEPTH (FT)	38.30		
WELL DIAMETER	1 INCH	GROUND WATER DEPTH	13.51 FT		
NO. OF WELLS IN CLUSTER	2 + Borehole	(STATIC WATER LEVEL DEPTH)			

MEASUREMENTS TAKEN FROM:

- [ ] ground surface
- [x] top of casing

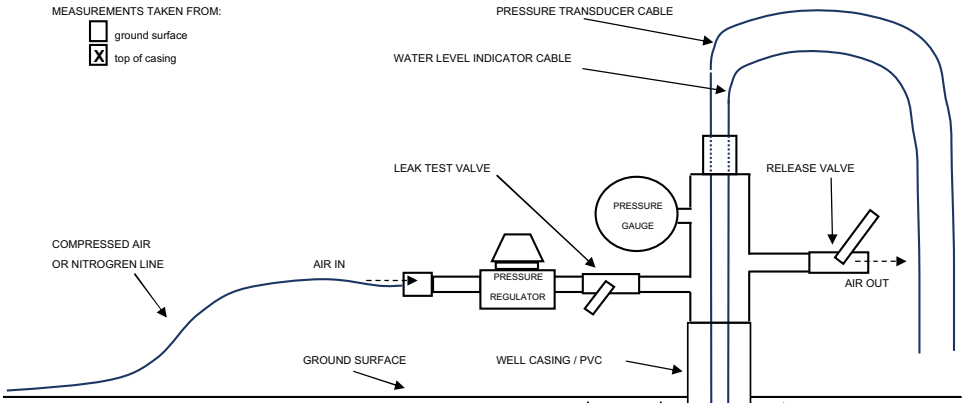

LEGEND:

DTB	DEPTH TO BOTTOM OF WELL FROM GROUND SURFACE	38.30	FT
DTS	DEPTH TO WELL SCREEN FROM GROUND SURFACE	33.30	FT
DTW	DEPTH TO STATIC WATER LEVEL FROM GROUND SURFACE	13.51	FT
WC	WATER COLUMN HEIGHT	24.79	FT
CH	CHANGE IN HEAD AFTER PRESSURIZATION	10.00	FT
AS	WATER COLUMN ABOVE SCREEN	19.79	FT

DTB	38.30	FT
− **DTW**	13.51	FT
= **WC**	24.79	FT
DTS	33.30	FT
− **DTW**	13.51	FT
= **AS**	19.79	FT
AS	19.79	FT
− SAFE MARGIN	9.79	FT
= **CH**	10.00	FT
CH	10.00	FT
+ **DTW**	13.51	FT
=WATER LEVEL INDICATOR DEPTH	23.51	FT
CH / 2.31 =	4.33	PSI
= PRESSURE APPLIED TO WELL HEAD		
DTW**	13.51	FT
+ TRANSDUCER READING	24.641	FT
= TRANSDUCER DEPTH	38.15	FT

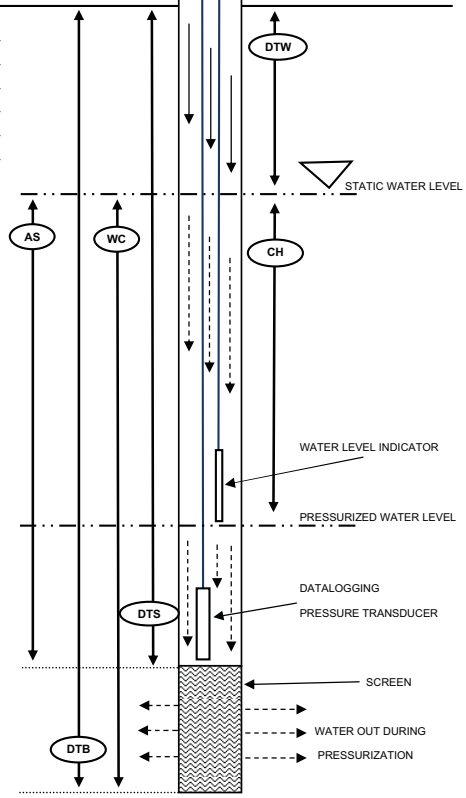

Time Test Start	9:24	
Transducer Reading at test start	24.799	FT
Time of Pressurization	9:24	
Time of Equilibrium	9:30	
Equilibrium Transducer Reading	24.869	FT
Time of Pressure Release	9:30	
Time Test Stop	9:34	

NOTES:

PNEUMATIC SLUG TEST LOG

GZA GEOENVIRONMENTAL OF NEW YORK 440 NINTH AVENUE, 18th FLOOR NEW YORK, NEW YORK 10001 SCIENTISTS AND ENGINEERS	Client Entergy Indian Point Energy Center	WELL ID	MW -63 - 35
		TEST NO.	1 of 2
		FILE NO.	41.0017869.01
		PROJECT LOCATION	Indian Point

GZA ENGINEER	Angela Hough	BORING COORDINATES	N 462969.2977	E	604251.0687
GZA ENGINEER	Sara Covelli	GROUND SURFACE EL.(FT)	14.178	DATUM	NGVD 29
GZA ENGINEER		TOP OF CASING EL.(FT)	13.059	DATE	5/9/07
		WELL DEPTH (FT)	35.00		
WELL DIAMETER	1 INCH	GROUND WATER DEPTH	13.43 FT		
NO. OF WELLS IN CLUSTER	2 + Borehole	(STATIC WATER LEVEL DEPTH)			

MEASUREMENTS TAKEN FROM:

- [ ] ground surface
- [x] top of casing

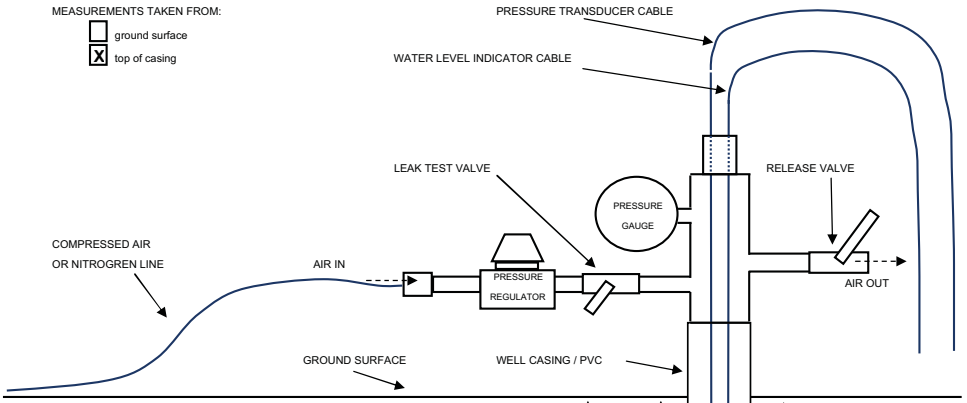

LEGEND:

DTB	DEPTH TO BOTTOM OF WELL FROM GROUND SURFACE	35.00	FT
DTS	DEPTH TO WELL SCREEN FROM GROUND SURFACE	30.00	FT
DTW	DEPTH TO STATIC WATER LEVEL FROM GROUND SURFACE	13.43	FT
WC	WATER COLUMN HEIGHT	21.57	FT
CH	CHANGE IN HEAD AFTER PRESSURIZATION	11.57	FT
AS	WATER COLUMN ABOVE SCREEN	16.57	FT

DTB	35.00	FT
− **DTW**	13.43	FT
= **WC**	21.57	FT
DTS	30.00	FT
− **DTW**	13.43	FT
= **AS**	16.57	FT
AS	16.57	FT
− SAFE MARGIN	5.00	FT
= **CH**	11.57	FT
CH	11.57	FT
+ **DTW**	13.43	FT
=WATER LEVEL INDICATOR DEPTH	25.00	FT
CH / 2.31 =	5.01	PSI
= PRESSURE APPLIED TO WELL HEAD		
DTW**	13.43	FT
+ TRANSDUCER READING	21.488	FT
= TRANSDUCER DEPTH	34.92	FT

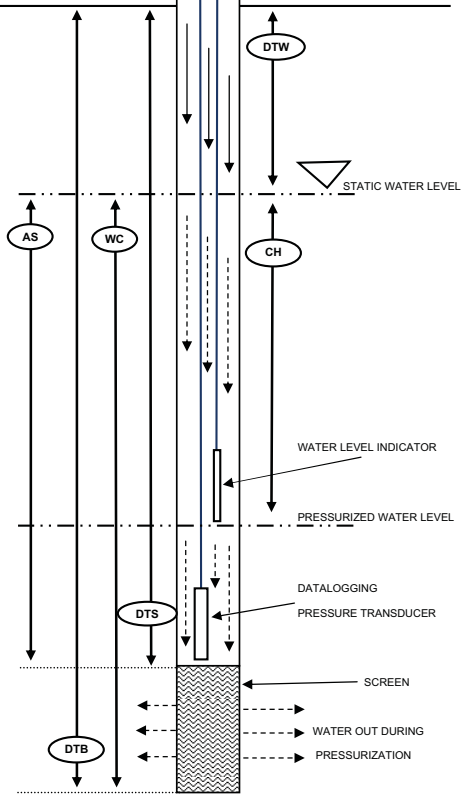

Time Test Start	10:01	
Transducer Reading at test start	21.449	FT
Time of Pressurization	10:02	
Time of Equilibrium	10:07	
Equilibrium Transducer Reading	21.487	FT
Time of Pressure Release	10:07	
Time Test Stop	10:16	

NOTES:

PNEUMATIC SLUG TEST LOG

GZA GEOENVIRONMENTAL OF NEW YORK 440 NINTH AVENUE, 18th FLOOR NEW YORK, NEW YORK 10001 SCIENTISTS AND ENGINEERS	Client Entergy Indian Point Energy Center	WELL ID	MW -63 - 35
		TEST NO.	2 of 2
		FILE NO.	41.0017869.01
		PROJECT LOCATION	Indian Point

GZA ENGINEER	Angela Hough	BORING COORDINATES	N 462969.2977	E	604251.0687
GZA ENGINEER	Sara Covelli	GROUND SURFACE EL.(FT)	14.178	DATUM	NGVD 29
GZA ENGINEER		TOP OF CASING EL.(FT)	13.059	DATE	5/9/07
		WELL DEPTH (FT)	35.00		
WELL DIAMETER	1 INCH	GROUND WATER DEPTH	13.43 FT		
NO. OF WELLS IN CLUSTER	2 + Borehole	(STATIC WATER LEVEL DEPTH)			

MEASUREMENTS TAKEN FROM:

- [ ] ground surface
- [x] top of casing

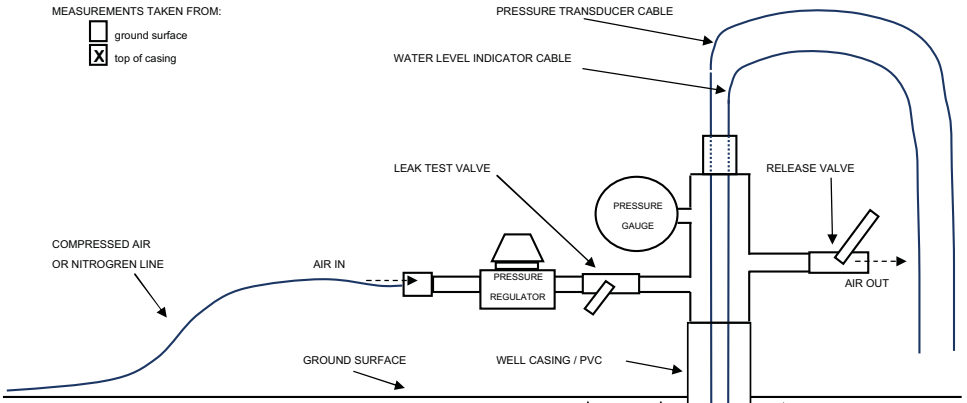

LEGEND:

DTB	DEPTH TO BOTTOM OF WELL FROM GROUND SURFACE	35.00	FT
DTS	DEPTH TO WELL SCREEN FROM GROUND SURFACE	30.00	FT
DTW	DEPTH TO STATIC WATER LEVEL FROM GROUND SURFACE	13.43	FT
WC	WATER COLUMN HEIGHT	21.57	FT
CH	CHANGE IN HEAD AFTER PRESSURIZATION	11.57	FT
AS	WATER COLUMN ABOVE SCREEN	16.57	FT

DTB	35.00	FT
− **DTW**	13.43	FT
= **WC**	21.57	FT
DTS	30.00	FT
− **DTW**	13.43	FT
= **AS**	16.57	FT
AS	16.57	FT
− SAFE MARGIN	5.00	FT
= **CH**	11.57	FT
CH	11.57	FT
+ **DTW**	13.43	FT
=WATER LEVEL INDICATOR DEPTH	25.00	FT
CH / 2.31 =	5.01	PSI
= PRESSURE APPLIED TO WELL HEAD		
DTW**	13.43	FT
+ TRANSDUCER READING	21.488	FT
= TRANSDUCER DEPTH	34.92	FT

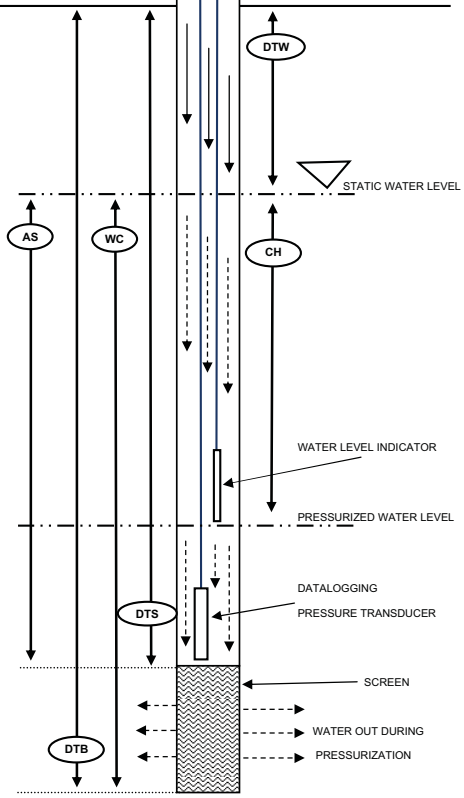

Time Test Start	10:19	
Transducer Reading at test start	21.348	FT
Time of Pressurization	10:19	
Time of Equilibrium	10:24	
Equilibrium Transducer Reading	21.347	FT
Time of Pressure Release	10:24	
Time Test Stop	10:35	

NOTES:

PNEUMATIC SLUG TEST LOG

GZA GEOENVIRONMENTAL OF NEW YORK 440 NINTH AVENUE, 18th FLOOR NEW YORK, NEW YORK 10001 SCIENTISTS AND ENGINEERS	Client Entergy Indian Point Energy Center	WELL ID	MW - 65 - 80
		TEST NO.	1 of 2
		FILE NO.	41.0017869.01
		PROJECT LOCATION	Indian Point

GZA ENGINEER	Angela Hough	BORING COORDINATES	N 462490.1706	E	604850.7655
GZA ENGINEER	Sara Covelli	GROUND SURFACE EL.(FT)	69.72	DATUM	NGVD 29
GZA ENGINEER		TOP OF CASING EL.(FT)	68.841	DATE	12/28/06
		WELL DEPTH (FT)	80		
WELL DIAMETER	1 INCH	GROUND WATER DEPTH	35.63 FT		
NO. OF WELLS IN CLUSTER	2	(STATIC WATER LEVEL DEPTH)			

MEASUREMENTS TAKEN FROM:

- [ ] ground surface
- [x] top of casing

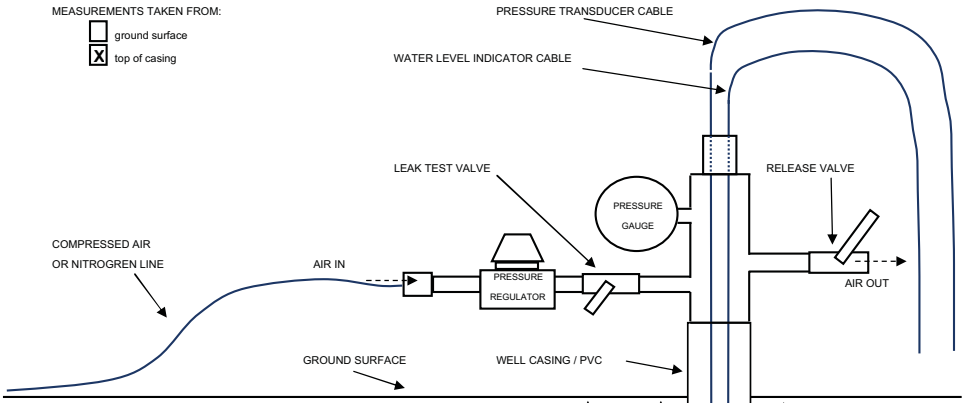

LEGEND:

DTB	DEPTH TO BOTTOM OF WELL FROM GROUND SURFACE	80.00	FT
DTS	DEPTH TO WELL SCREEN FROM GROUND SURFACE	60.00	FT
DTW	DEPTH TO STATIC WATER LEVEL FROM GROUND SURFACE	35.63	FT
WC	WATER COLUMN HEIGHT	44.37	FT
CH	CHANGE IN HEAD AFTER PRESSURIZATION	19.37	FT
AS	WATER COLUMN ABOVE SCREEN	24.37	FT

DTB	80.00	FT
− **DTW**	35.63	FT
= **WC**	44.37	FT
DTS	60.00	FT
− **DTW**	35.63	FT
= **AS**	24.37	FT
AS	24.37	FT
− SAFE MARGIN	5.00	FT
= **CH**	19.37	FT
CH	19.37	FT
+ **DTW**	35.63	FT
=WATER LEVEL INDICATOR DEPTH	55.00	FT
CH / 2.31 =	8.39	PSI
= PRESSURE APPLIED TO WELL HEAD		
DTW	35.63	FT
+ TRANSDUCER READING	42.200	FT
= TRANSDUCER DEPTH	77.83	FT

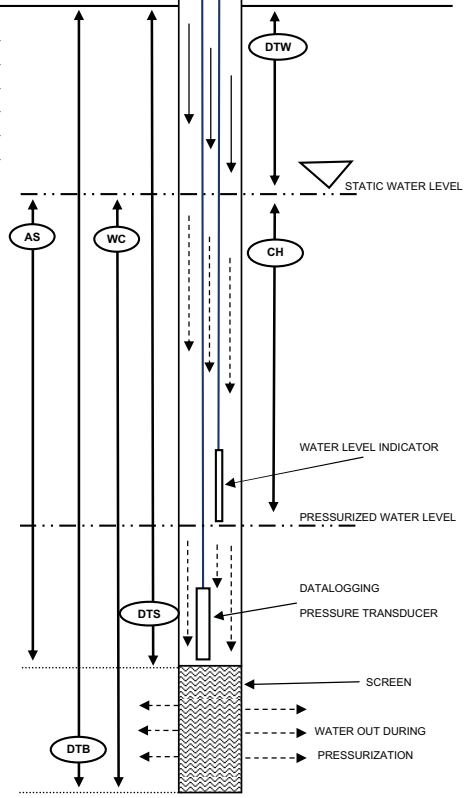

Time Test Start	10:47	
Transducer Reading at test start	42.102	FT
Time of Pressurization	10:48	
Time of Equilibrium	11:12	
Equilibrium Transducer Reading	42.171	FT
Time of Pressure Release	11:12	
Time Test Stop	11:26	

NOTES:

PNEUMATIC SLUG TEST LOG

GZA GEOENVIRONMENTAL OF NEW YORK 440 NINTH AVENUE, 18th FLOOR NEW YORK, NEW YORK 10001 SCIENTISTS AND ENGINEERS	Client Entergy Indian Point Energy Center	WELL ID	MW - 65 - 80
		TEST NO.	2 of 2
		FILE NO.	41.0017869.01
		PROJECT LOCATION	Indian Point

GZA ENGINEER	Angela Hough	BORING COORDINATES	N 462490.1706	E	604850.7655
GZA ENGINEER	Sara Covelli	GROUND SURFACE EL.(FT)	69.72	DATUM	NGVD 29
GZA ENGINEER		TOP OF CASING EL.(FT)	68.841	DATE	12/28/06
		WELL DEPTH (FT)	80		
WELL DIAMETER	1 INCH	GROUND WATER DEPTH	35.63 FT		
NO. OF WELLS IN CLUSTER	2	(STATIC WATER LEVEL DEPTH)			

MEASUREMENTS TAKEN FROM:

- [ ] ground surface
- [x] top of casing

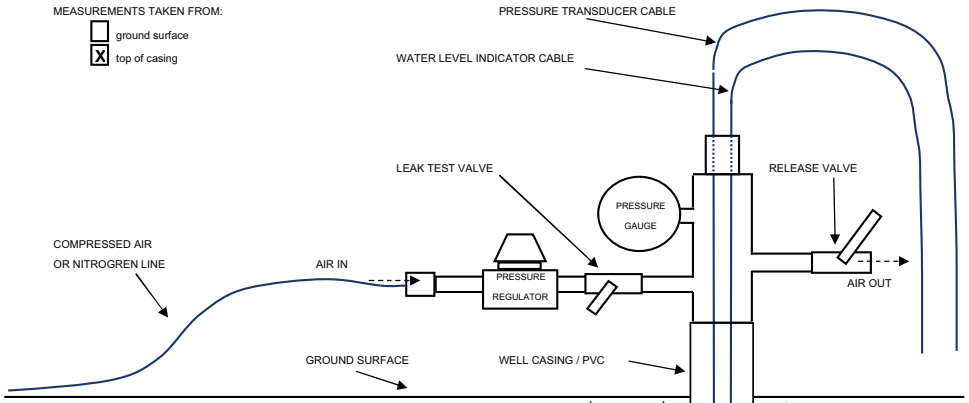

LEGEND:

DTB	DEPTH TO BOTTOM OF WELL FROM GROUND SURFACE	80.00	FT
DTS	DEPTH TO WELL SCREEN FROM GROUND SURFACE	60.00	FT
DTW	DEPTH TO STATIC WATER LEVEL FROM GROUND SURFACE	35.63	FT
WC	WATER COLUMN HEIGHT	44.37	FT
CH	CHANGE IN HEAD AFTER PRESSURIZATION	19.37	FT
AS	WATER COLUMN ABOVE SCREEN	24.37	FT

DTB	80.00	FT
− **DTW**	35.63	FT
= **WC**	44.37	FT
DTS	60.00	FT
− **DTW**	35.63	FT
= **AS**	24.37	FT
AS	24.37	FT
− SAFE MARGIN	5.00	FT
= **CH**	19.37	FT
CH	19.37	FT
+ **DTW**	35.63	FT
=WATER LEVEL INDICATOR DEPTH	55.00	FT
CH / 2.31 =	8.39	PSI
= PRESSURE APPLIED TO WELL HEAD		
DTW	35.63	FT
+ TRANSDUCER READING	42.200	FT
= TRANSDUCER DEPTH	77.83	FT

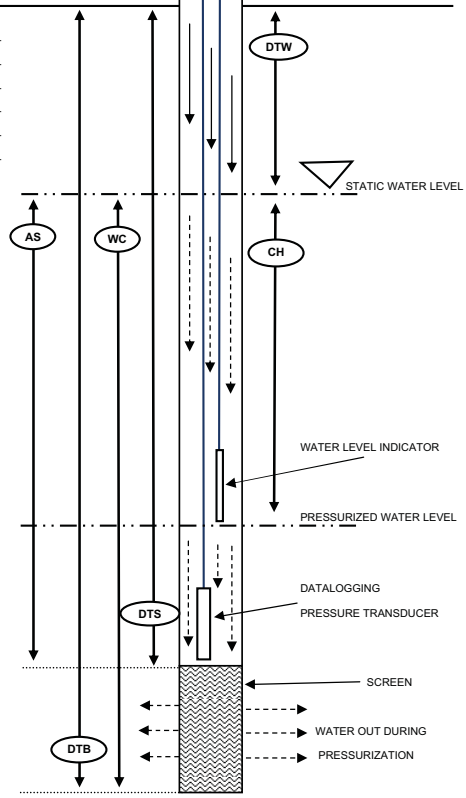

Time Test Start	11:27	
Transducer Reading at test start	42.107	FT
Time of Pressurization	11:27	
Time of Equilibrium	11:46	
Equilibrium Transducer Reading	42.189	FT
Time of Pressure Release	11:46	
Time Test Stop	12:05	

NOTES:

APPENDIX I – PACKER TEST FIELD LOGS

PACKER TEST LOG

GZA GEOENVIRONMENTAL OF NEW YORK 440 NINTH AVENUE, 18th FLOOR NEW YORK, NEW YORK 10001 SCIENTISTS AND ENGINEERS	Client Entergy Indian Point Energy Center Buchanan, NY	BORING NO./TEST NO. MW-30 Test 1 SHEET 1 of 1 FILE NO. 41.0017869.10 PROJECT LOCATION Indian Point Energy Center

CONTRACTOR	Aquifer Drilling & Testing, Inc.	BORING COORDINATES	N 463012.3771	E 604885.1439	
FOREMAN	D. Wood	GROUND SURFACE EL.(FT)	51.7	DATUM	NGVD 29
GZA ENG.	S. Kline/A. Gallas	FINAL BORING DEPTH (FT)	61.7	DATE START/END	11/22/05

DIAMETER OF DRILLED BOREHOLE 3.83 INCH

GROUND WATER DEPTH (STATIC WATER LEVEL DEPTH) 40.55 ft below ground surface

I.D. OF DRILLING RODS 2 INCH

TESTED INTERVAL FROM / TO (FT)	TIME (HR:MIN:SEC)	ELAPSED TIME (Δt MIN)	DEPTH TO WATER (FT)	DRAWDOWN (ΔH FT)	RECOVERY RATE (ΔH/Δt)
52.3 to 61.7	13:15	0.0	59.0	18.45	-
L= 9.6 ft	13:17	2.0	56.40	15.85	7.93
	13:20	5.0	56.37	15.82	3.16
	13:25	10.0	56.24	15.69	1.57
	13:30	15.0	56.24	15.69	1.05
	13:35	20.0	56.18	15.63	0.78
	13:40	25.0	56.16	15.61	0.62
	13:45	30.0	56.05	15.50	0.52
	13:50	35.0	56.03	15.48	0.44
	13:55	40.0	55.98	15.43	0.39
	14:00	45.0	55.92	15.37	0.34

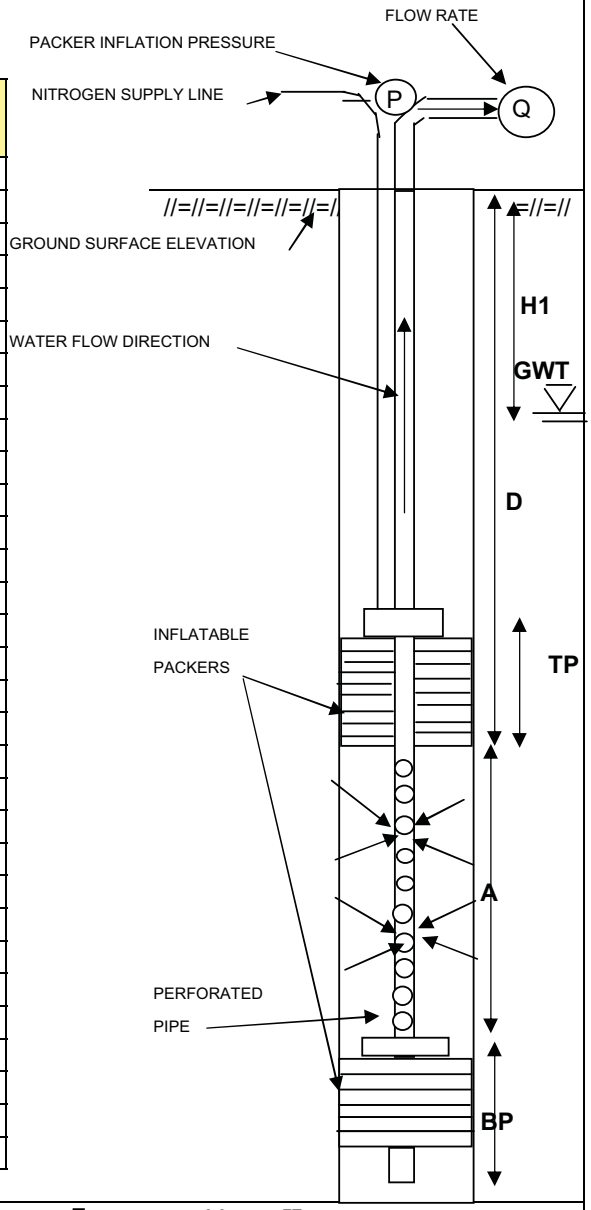

LEGEND:				
	A - TOTAL LENGTH OF TEST SECTION (FT)	=	9.6	FT
	TP - TOTAL LENGTH OF TOP PACKER AND ASSEMBLY	=	2.53	FT
	BP - TOTAL LENGTH OF BOTTOM PACKER AND ASSEMBLY	=	OPEN	FT
	D - DISTANCE BETWEEN GROUND SURFACE AND TOP OF THE TEST ZONE	=	52.3	FT
	H1- DISTANCE BETWEEN GROUND SURFACE AND GROUND WATER TABLE	=	40.55	FT

GZA 4 Gallons Purge

BORING NO. /TEST NO. : MW-30 Test1

PACKER TEST LOG

GZA GEOENVIRONMENTAL OF NEW YORK 440 NINTH AVENUE, 18th FLOOR NEW YORK, NEW YORK 10001 SCIENTISTS AND ENGINEERS	Client Entergy Indian Point Energy Center Buchanan, NY	BORING NO./TEST NO.	MW-30 Test 2
		SHEET	1 of 1
		GZA PROJECT NO.	41.0017869.10
		PROJECT LOCATION	Indian Point Energy Center

CONTRACTOR	Aquifer Drilling & Testing, Inc.	BORING COORDINATES	N 463012.3771	E 604885.1439	
FOREMAN	D. Wood	GROUND SURFACE EL.(FT)	51.7	DATUM	NGVD 29
GZA ENG.	S. Kline/A. Gallas	FINAL BORING DEPTH (FT)	61.7	DATE START/END	11/22/05

DIAMETER OF DRILLED BOREHOLE 3.83 INCH

GROUND WATER DEPTH (STATIC WATER LEVEL DEPTH) 38.17 ft below ground surface

I.D. OF DRILLING RODS 2 INCH

TESTED INTERVAL FROM / TO (FT)	TIME (HR:MIN:SEC)	ELAPSED TIME (Δt MIN)	DEPTH TO WATER (FT)	DRAWDOWN (ΔH FT)	RECOVERY RATE (ΔH/Δt)
48.2 to 53.0	14:55	0.0			Pump on
L= 4.8 ft	14:56	1.0			Pump off
	14:57	2.0	52.81	14.64	7.32
	14:58	3.0	52.57	14.40	4.80
	15:00	5.0	52.32	14.15	2.83
	15:08	13.0	52.28	14.11	1.09
	15:13	18.0	52.32	14.15	0.79
	15:18	23.0	52.28	14.11	0.61
	15:25	30.0	52.31	14.14	0.47

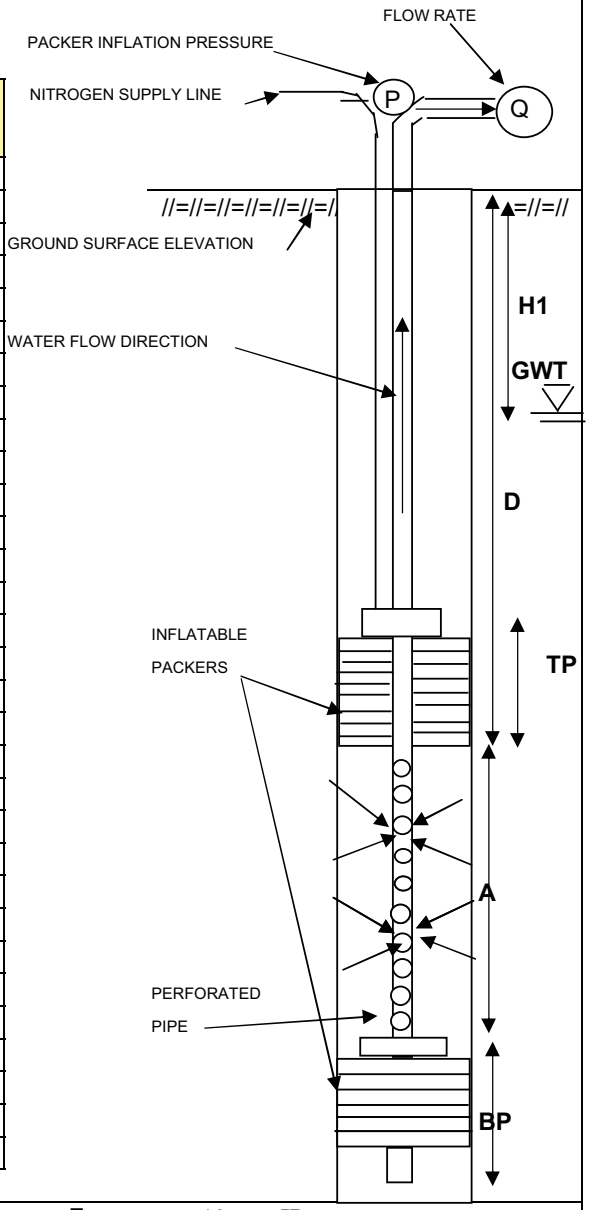

LEGEND:				
	A - TOTAL LENGTH OF TEST SECTION (FT)	=	4.8	FT
	TP - TOTAL LENGTH OF TOP PACKER AND ASSEMBLY	=	2.53	FT
	BP - TOTAL LENGTH OF BOTTOM PACKER AND ASSEMBLY	=	2.45	FT
	D - DISTANCE BETWEEN GROUND SURFACE AND TOP OF THE TEST ZONE	=	48.2	FT
	H1- DISTANCE BETWEEN GROUND SURFACE AND GROUND WATER TABLE	=	38.17	FT

GZA 4 Gallons Purge

BORING NO. /TEST NO. : MW-30 Test 2

PACKER TEST LOG

GZA GEOENVIRONMENTAL OF NEW YORK 440 NINTH AVENUE, 18th FLOOR NEW YORK, NEW YORK 10001 SCIENTISTS AND ENGINEERS	Client Entergy Indian Point Energy Center Buchanan, NY	BORING NO./TEST NO. MW-30 Test 3 SHEET 1 of 1 FILE NO. 41.0017869.10 PROJECT LOCATION Indian Point Energy Center

CONTRACTOR	Aquifer Drilling & Testing, Inc.	BORING COORDINATES	N 463012.3771	E 604885.1439	
FOREMAN	D. Wood	GROUND SURFACE EL.(FT)	51.7	DATUM	NGVD 29
GZA ENG.	S. Kline/A. Gallas	FINAL BORING DEPTH (FT)	61.7	DATE START/END	11/22/05

DIAMETER OF DRILLED BOREHOLE 3.83 INCH

GROUND WATER DEPTH (STATIC WATER LEVEL DEPTH) 39.97 ft below ground surface

I.D. OF DRILLING RODS 2 INCH

TESTED INTERVAL FROM / TO (FT)	TIME (HR:MIN:SEC)	ELAPSED TIME (Δt MIN)	DEPTH TO WATER (FT)	DRAWDOWN (ΔH FT)	RECOVERY RATE (ΔH/Δt)
45.0 to 49.8	15:44	0.0			
L= 4.8 ft	15:45	1.0	49.85	9.88	9.88
	15:47	3.0	45.3	5.33	1.78
	15:50	6.0	42.8	2.83	0.47
	15:55	11.0	42.14	2.17	0.20
	16:00	16.0	41.53	1.56	0.10
	Sample collected at 16:04				

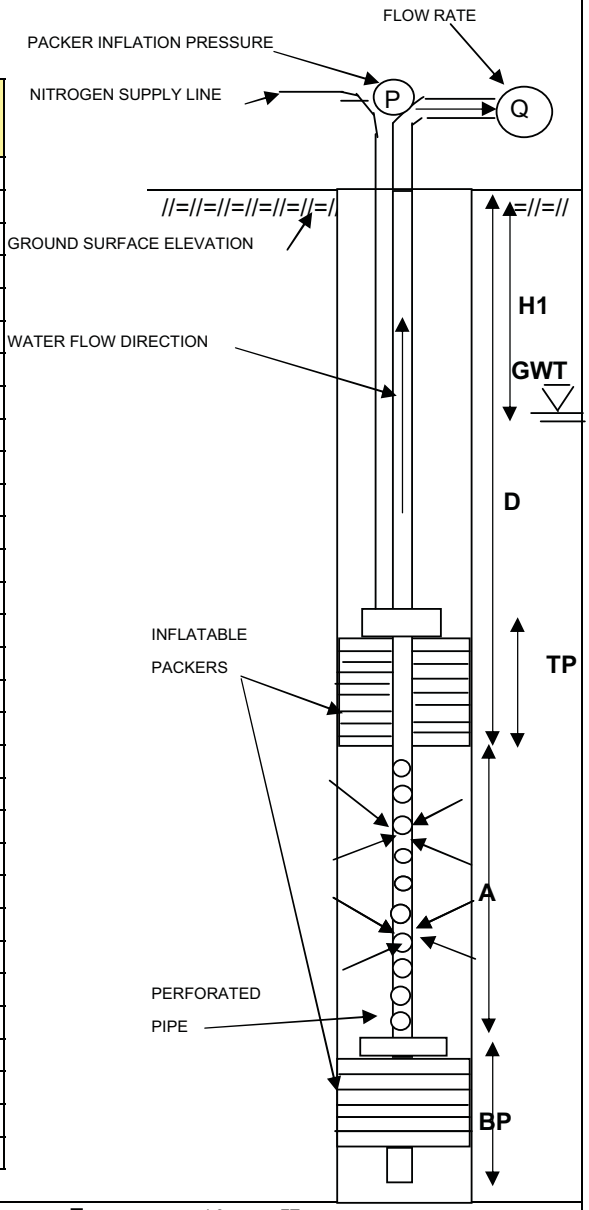

LEGEND:				
	A - TOTAL LENGTH OF TEST SECTION (FT)	=	4.8	FT
	TP - TOTAL LENGTH OF TOP PACKER AND ASSEMBLY	=	2.53	FT
	BP - TOTAL LENGTH OF BOTTOM PACKER AND ASSEMBLY	=	2.45	FT
	D - DISTANCE BETWEEN GROUND SURFACE AND TOP OF THE TEST ZONE	=	45.0	FT
	H1- DISTANCE BETWEEN GROUND SURFACE AND GROUND WATER TABLE	=	39.97	FT

GZA 5.5 Gallons Purge

BORING NO. /TEST NO. : MW-30 Test 3

PACKER TEST LOG

GZA GEOENVIRONMENTAL OF NEW YORK 440 NINTH AVENUE, 18th FLOOR NEW YORK, NEW YORK 10001 SCIENTISTS AND ENGINEERS	Client Entergy Indian Point Energy Center Buchanan, NY	BORING NO./TEST NO. MW-30 Test 4 SHEET 1 of 1 FILE NO. 41.0017869.10 PROJECT LOCATION Indian Point Energy Center

CONTRACTOR	Aquifer Drilling & Testing, Inc.	BORING COORDINATES	N 463012.3771	E 604885.1439	
FOREMAN	D. Wood	GROUND SURFACE EL.(FT)	51.7	DATUM	NGVD 29
GZA ENG.	S. Kline/A. Gallas	FINAL BORING DEPTH (FT)	61.7	DATE START/END	11/22/05

DIAMETER OF DRILLED BOREHOLE 3.83 INCH

GROUND WATER DEPTH (STATIC WATER LEVEL DEPTH) 39.98 ft below ground surface

I.D. OF DRILLING RODS 2 INCH

TESTED INTERVAL FROM / TO (FT)	TIME (HR:MIN:SEC)	ELAPSED TIME (Δt MIN)	DEPTH TO WATER (FT)	DRAWDOWN (ΔH FT)	RECOVERY RATE (ΔH/Δt)
41.5 to 46.3	16:28	0	48.24	8.26	-
L= 4.8 ft	16:29	1.0	47.35	7.37	7.37
	16:30	2.0	45.65	5.67	2.84
	16:32	4.0	44.93	4.95	1.24
	16:35	7.0	44.27	4.29	0.61
	16:40	12.0	43.52	3.54	0.30

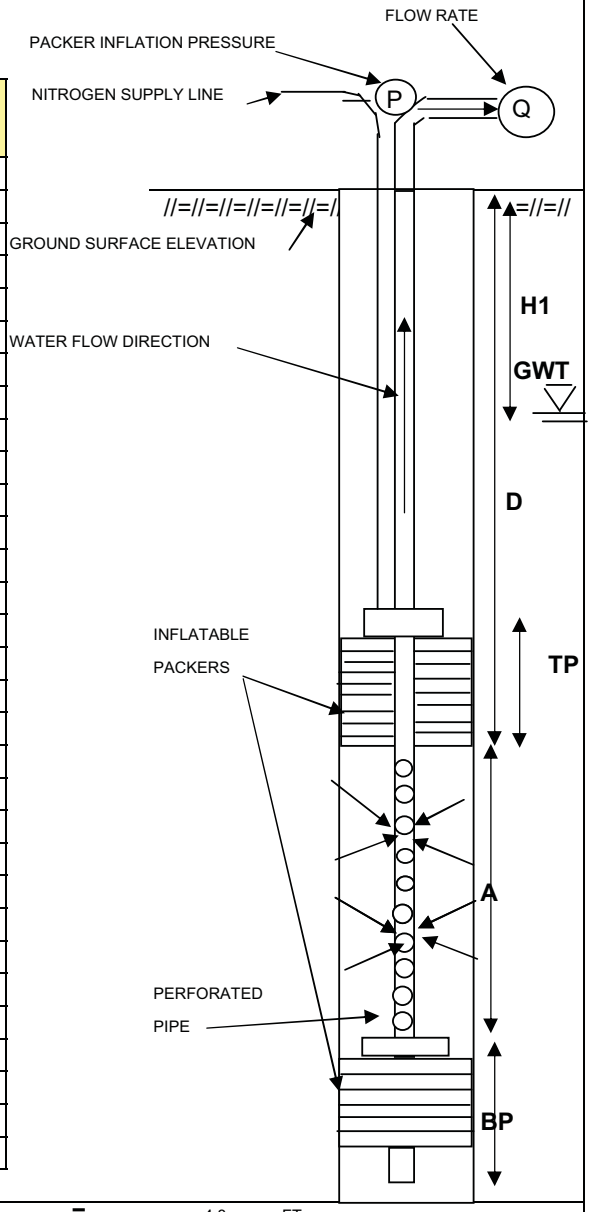

LEGEND:				
	A - TOTAL LENGTH OF TEST SECTION (FT)	=	4.8	FT
	TP - TOTAL LENGTH OF TOP PACKER AND ASSEMBLY	=	2.53	FT
	BP - TOTAL LENGTH OF BOTTOM PACKER AND ASSEMBLY	=	2.45	FT
	D - DISTANCE BETWEEN GROUND SURFACE AND TOP OF THE TEST ZONE	=	41.5	FT
	H1- DISTANCE BETWEEN GROUND SURFACE AND GROUND WATER TABLE	=	39.98	FT

GZA 5.5 Gallons Purge =0.598 gal per ft

BORING NO. /TEST NO. : MW-30 Test 4

PACKER TEST LOG

GZA GEOENVIRONMENTAL OF NEW YORK 440 NINTH AVENUE, 18th FLOOR NEW YORK, NEW YORK 10001 SCIENTISTS AND ENGINEERS	Client Entergy Indian Point Energy Center Buchanan, NY	BORING NO./TEST NO.	MW-31 Test 1
		SHEET	1 of 1
		FILE NO.	41.0017869.10
		PROJECT LOCATION	Indian Point Energy Center

CONTRACTOR	Aquifer Drilling & Testing, Inc.	BORING COORDINATES	N 462969.8368	E 604924.2169	
FOREMAN	D. Wood	GROUND SURFACE EL.(FT)	79.793	DATUM	NGVD 29
GZA ENG.	P. Mahon	FINAL BORING DEPTH (FT)	90	DATE START/END	1/16/06

DIAMETER OF DRILLED BOREHOLE 3.83 INCH

GROUND WATER DEPTH (STATIC WATER LEVEL DEPTH) 32.2 ft below ground surface

I.D. OF DRILLING RODS 2 INCH

TESTED INTERVAL FROM / TO (FT)	TIME (HR:MIN:SEC)	ELAPSED TIME (Δt MIN)	DEPTH TO WATER (FT)	DRAW DOWN (ΔH FT)	RECOVERY RATE (ΔH/Δt)
79.9-90.0	11:19	-	32.2	0.00	-
L= 10.1 ft	11:34	0	69.2	37.00	-
	11:44	10	49.0	16.80	1.68
	11:54	20	39.6	7.40	0.37
	12:04	30	35.2	3.00	0.10
	12:14	40	33.9	1.70	0.04
	12:24	50	33.5	1.30	0.03
	12:34	60	33.5	1.30	0.02
	12:44	70	33.4	1.20	0.02
	12:54	80	33.3	1.10	0.01
	13:02	88	33.3	1.10	0.01

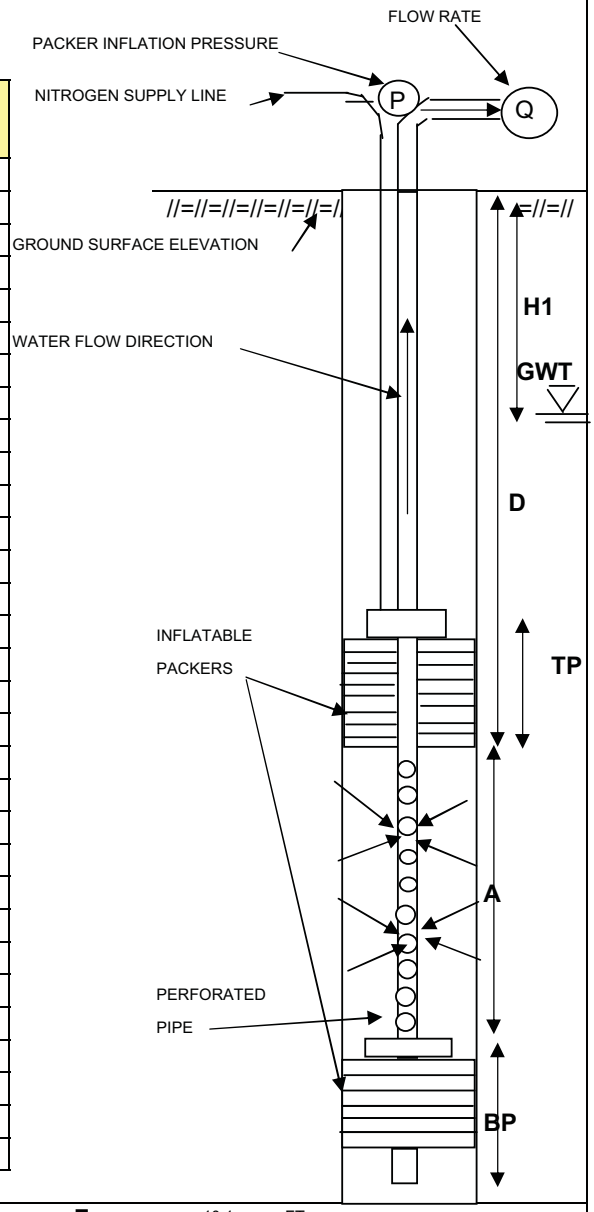

LEGEND:				
	A - TOTAL LENGTH OF TEST SECTION (FT)	=	10.1	FT
	TP - TOTAL LENGTH OF TOP PACKER AND ASSEMBLY	=	2.5	FT
	BP - TOTAL LENGTH OF BOTTOM PACKER AND ASSEMBLY	=	NA	FT
	D - DISTANCE BETWEEN GROUND SURFACE AND TOP OF THE TEST ZONE	=	79.9	FT
	PIP- PACKER INFLATION PRESSURE	=	140	PSI
	H1- DISTANCE BETWEEN WATER PRESSURE GAUGE AND GROUND SURFACE	=	87.9	FT
	H2- DISTANCE BETWEEN GROUND SURFACE AND GROUND WATER TABLE	=	32.2	FT

GZA

BORING NO. /TEST NO. : MW-31 Test 1

PACKER TEST LOG

GZA GEOENVIRONMENTAL OF NEW YORK 440 NINTH AVENUE, 18th FLOOR NEW YORK, NEW YORK 10001 SCIENTISTS AND ENGINEERS	Client Entergy Indian Point Energy Center Buchanan, NY	BORING NO./TEST NO.	MW-31 Test 2
		SHEET	1 of 1
		FILE NO.	41.0017869.10
		PROJECT LOCATION	Indian Point Energy Center

CONTRACTOR	Aquifer Drilling & Testing, Inc.	BORING COORDINATES	N 462969.8368	E 604924.2169	
FOREMAN	D. Wood	GROUND SURFACE EL.(FT)	79.793	DATUM	NGVD 29
GZA ENG.	P. Mahon	FINAL BORING DEPTH (FT)	90	DATE START/END	1/17/06

DIAMETER OF DRILLED BOREHOLE 3.83 INCH

GROUND WATER DEPTH (STATIC WATER LEVEL DEPTH) 33.0 ft below ground surface

I.D. OF DRILLING RODS 2 INCH

TESTED INTERVAL FROM / TO (FT)	TIME (HR:MIN:SEC)	ELAPSED TIME (Δt MIN)	DEPTH TO WATER (FT)	DRAW DOWN (ΔH FT)	RECOVERY RATE (ΔH/Δt)
73.4-82.0	14:42	-	33.0	0.00	-
L= 8.6 ft	14:48	0	52.7	19.70	-
	14:58	10	37.6	4.60	0.46
	15:08	20	35.2	2.20	0.11
	15:16	28	34.8	1.80	0.06

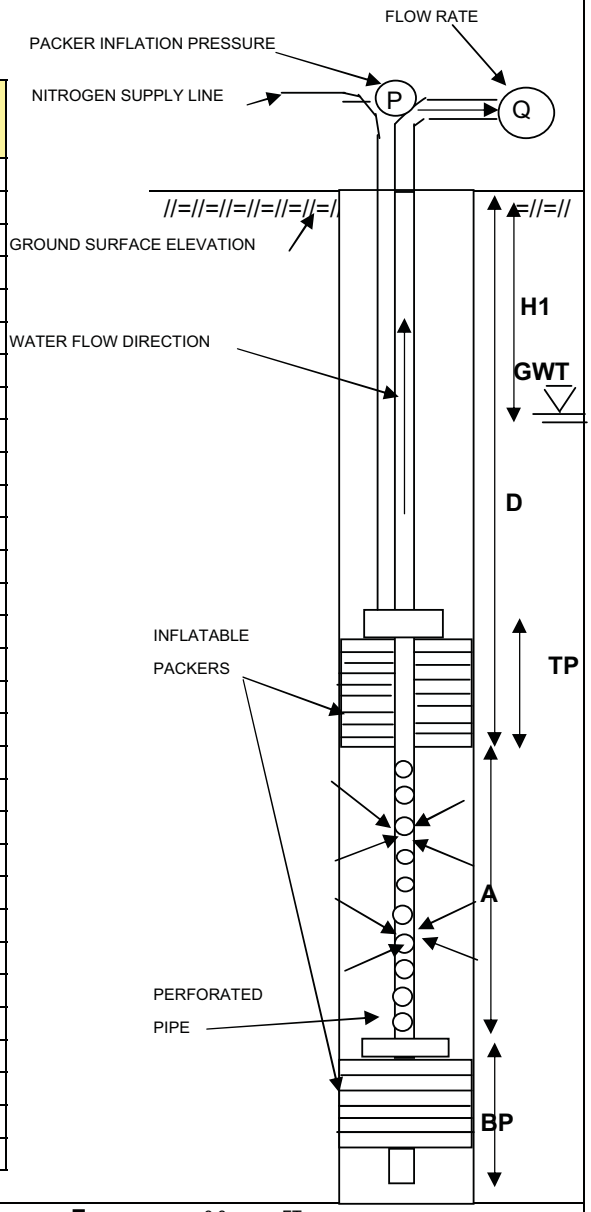

LEGEND:				
	A - TOTAL LENGTH OF TEST SECTION (FT)	=	8.6	FT
	TP - TOTAL LENGTH OF TOP PACKER AND ASSEMBLY	=	2.5	FT
	BP - TOTAL LENGTH OF BOTTOM PACKER AND ASSEMBLY	=	4.2	FT
	D - DISTANCE BETWEEN GROUND SURFACE AND TOP OF THE TEST ZONE	=	73.4	FT
	PIP- PACKER INFLATION PRESSURE	=	200	PSI
	H1- DISTANCE BETWEEN WATER PRESSURE GAUGE AND GROUND SURFACE	=	81.2	FT
	H2- DISTANCE BETWEEN GROUND SURFACE AND GROUND WATER TABLE	=	33.0	FT

GZA

BORING NO. /TEST NO. : MW-31 Test 2

PACKER TEST LOG

GZA GEOENVIRONMENTAL OF NEW YORK 440 NINTH AVENUE, 18th FLOOR NEW YORK, NEW YORK 10001 SCIENTISTS AND ENGINEERS	Client Entergy Indian Point Energy Center Buchanan, NY	BORING NO./TEST NO.	MW-31 Test 3
		SHEET	1 of 1
		FILE NO.	41.0017869.10
		PROJECT LOCATION	Indian Point Energy Center

CONTRACTOR	Aquifer Drilling & Testing, Inc.	BORING COORDINATES	N 462969.8368	E 604924.2169	
FOREMAN	D. Wood	GROUND SURFACE EL.(FT)	79.793	DATUM	NGVD 29
GZA ENG.	P. Mahon	FINAL BORING DEPTH (FT)	90	DATE START/END	1/18/06

DIAMETER OF DRILLED BOREHOLE 3.83 INCH

GROUND WATER DEPTH (STATIC WATER LEVEL DEPTH) 32.7 ft below ground surface

I.D. OF DRILLING RODS 2 INCH

TESTED INTERVAL FROM / TO (FT)	TIME (HR:MIN:SEC)	ELAPSED TIME (Δt MIN)	DEPTH TO WATER (FT)	DRAW DOWN (ΔH FT)	RECOVERY RATE (ΔH/Δt)
65.4-74.0	9:09	-	32.7	0.00	-
L= 8.6 ft	9:19	0.0	59.9	27.20	-
	9:29	10.0	43.8	11.10	1.11
	9:39	20.0	37.0	4.30	0.22
	9:49	30.0	34.1	1.40	0.05
	9:58	39.0	33.6	0.90	0.02

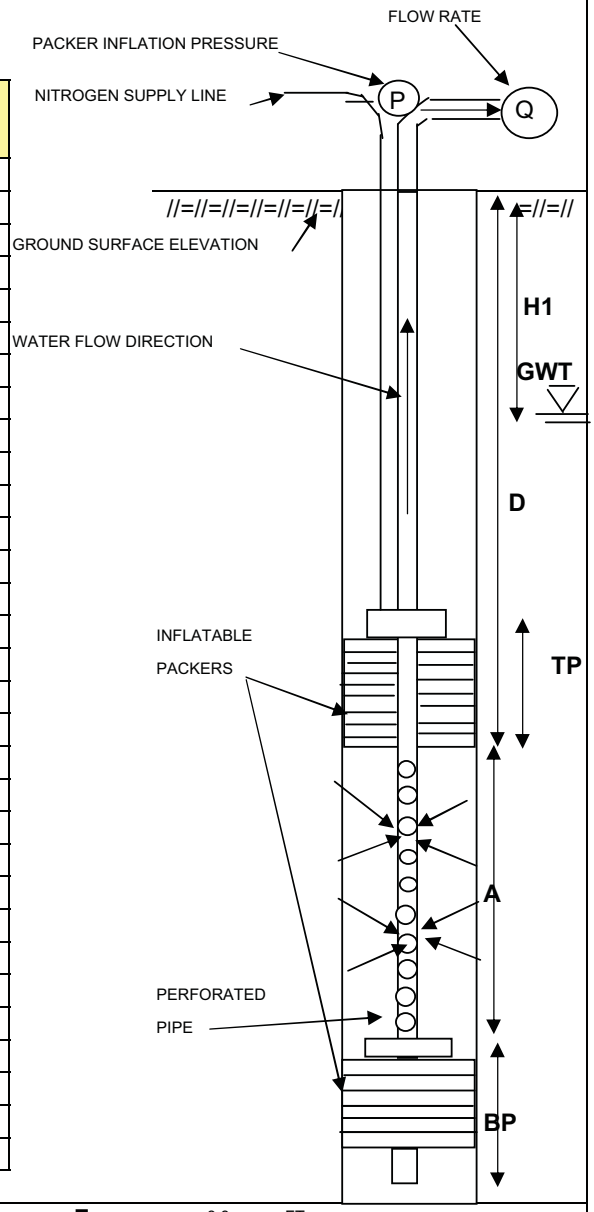

LEGEND:				
	A - TOTAL LENGTH OF TEST SECTION (FT)	=	8.6	FT
	TP - TOTAL LENGTH OF TOP PACKER AND ASSEMBLY	=	2.5	FT
	BP - TOTAL LENGTH OF BOTTOM PACKER AND ASSEMBLY	=	4.2	FT
	D - DISTANCE BETWEEN GROUND SURFACE AND TOP OF THE TEST ZONE	=	65.4	FT
	PIP- PACKER INFLATION PRESSURE	=	160	PSI
	H1- DISTANCE BETWEEN WATER PRESSURE GAUGE AND GROUND SURFACE	=	74	FT
	H2- DISTANCE BETWEEN GROUND SURFACE AND GROUND WATER TABLE	=	32.7	FT

PACKER TEST LOG

GZA GEOENVIRONMENTAL OF NEW YORK 440 NINTH AVENUE, 18th FLOOR NEW YORK, NEW YORK 10001 SCIENTISTS AND ENGINEERS	Client Entergy Indian Point Energy Center Buchanan, NY	BORING NO./TEST NO.	MW-31 Test 4
		SHEET	1 of 1
		FILE NO.	41.0017869.10
		PROJECT LOCATION	Indian Point Energy Center

CONTRACTOR	Aquifer Drilling & Testing, Inc.	BORING COORDINATES	N 462969.8368	E 604924.2169	
FOREMAN	D. Wood	GROUND SURFACE EL.(FT)	79.793	DATUM	NGVD 29
GZA ENG.	P. Mahon	FINAL BORING DEPTH (FT)	90	DATE START/END	1/18/06

DIAMETER OF DRILLED BOREHOLE 3.83 INCH

GROUND WATER DEPTH (STATIC WATER LEVEL DEPTH) 32.6 ft below ground surface

I.D. OF DRILLING RODS 2 INCH

TESTED INTERVAL FROM / TO (FT)	TIME (HR:MIN:SEC)	ELAPSED TIME (Δt MIN)	DEPTH TO WATER (FT)	DRAW DOWN (ΔH FT)	RECOVERY RATE (ΔH/Δt)
58.4-67.0	10:40	-	32.6	0.00	-
L= 8.6 ft	10:52	-	62.4	29.80	-
	11:26	-	1.8	-30.80	-
	11:34	0.0	49.0	16.40	-
	11:44	10.0	38.0	5.40	0.54
	11:52	18.0	34.6	2.00	0.11

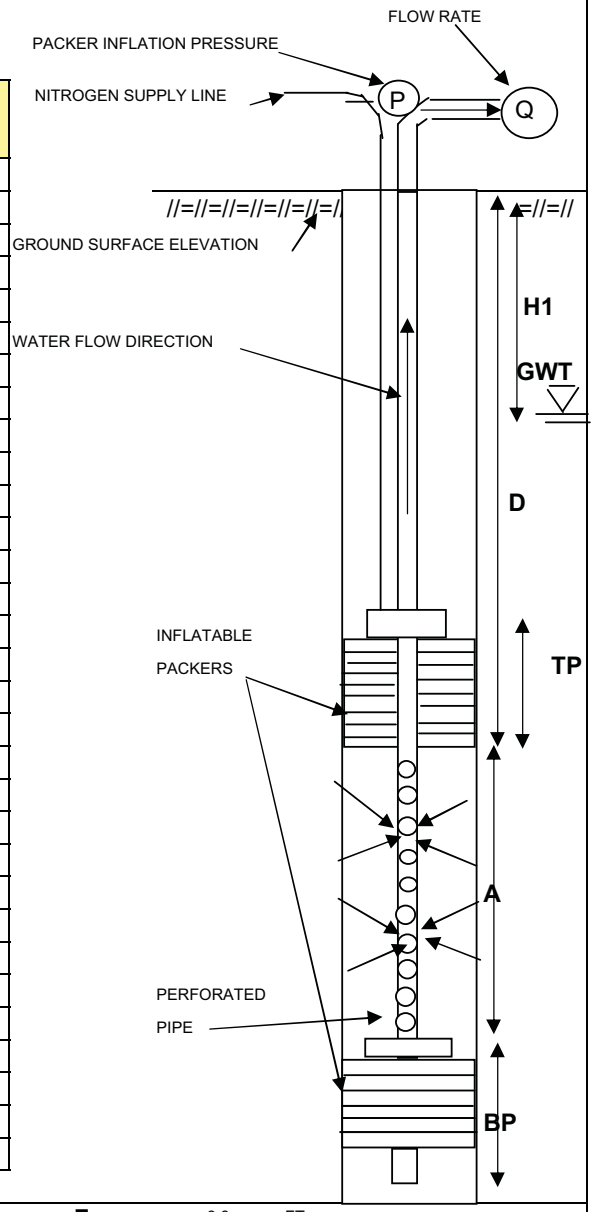

LEGEND:				
	A - TOTAL LENGTH OF TEST SECTION (FT)	=	8.6	FT
	TP - TOTAL LENGTH OF TOP PACKER AND ASSEMBLY	=	2.5	FT
	BP - TOTAL LENGTH OF BOTTOM PACKER AND ASSEMBLY	=	4.2	FT
	D - DISTANCE BETWEEN GROUND SURFACE AND TOP OF THE TEST ZONE	=	58.4	FT
	PIP- PACKER INFLATION PRESSURE	=	160	PSI
	H1- DISTANCE BETWEEN WATER PRESSURE GAUGE AND GROUND SURFACE	=	67	FT
	H2- DISTANCE BETWEEN GROUND SURFACE AND GROUND WATER TABLE	=	32.6	FT

GZA

BORING NO. /TEST NO. : MW-31 Test 4

PACKER TEST LOG

GZA GEOENVIRONMENTAL OF NEW YORK 440 NINTH AVENUE, 18th FLOOR NEW YORK, NEW YORK 10001 SCIENTISTS AND ENGINEERS	Client Entergy Indian Point Energy Center Buchanan, NY	BORING NO./TEST NO.	MW-31 Test 5
		SHEET	1 of 1
		FILE NO.	41.0017869.10
		PROJECT LOCATION	Indian Point Energy Center

CONTRACTOR	Aquifer Drilling & Testing, Inc.	BORING COORDINATES	N 462969.8368	E 604924.2169	
FOREMAN	D. Wood	GROUND SURFACE EL.(FT)	79.793	DATUM	NGVD 29
GZA ENG.	P. Mahon	FINAL BORING DEPTH (FT)	90	DATE START/END	1/18/06

DIAMETER OF DRILLED BOREHOLE 3.83 INCH

GROUND WATER DEPTH (STATIC WATER LEVEL DEPTH) 33.0 ft below ground surface

I.D. OF DRILLING RODS 2 INCH

TESTED INTERVAL FROM / TO (FT)	TIME (HR:MIN:SEC)	ELAPSED TIME (Δt MIN)	DEPTH TO WATER (FT)	DRAW DOWN (ΔH FT)	RECOVERY RATE (ΔH/Δt)
50.9-59.5	12:08	-	33.0	0.00	-
L= 8.6 ft	12:20	0.0	40.2	7.20	-
	12:30	10.0	33.2	0.20	0.02
	12:40	20.0	33.2	0.20	0.01

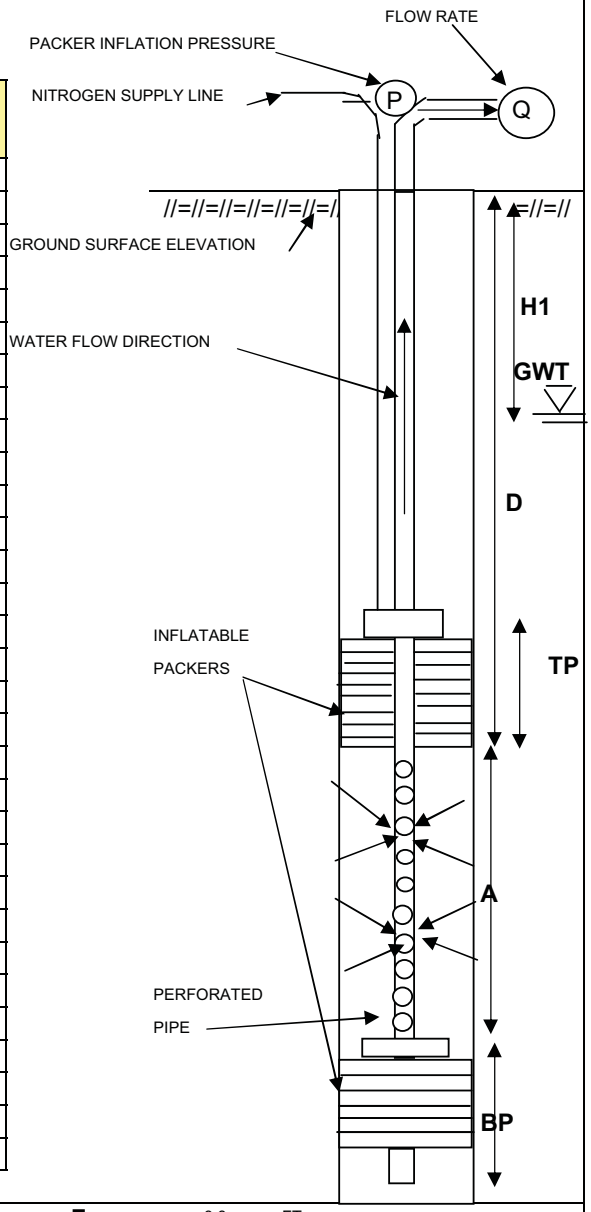

LEGEND:				
	A - TOTAL LENGTH OF TEST SECTION (FT)	=	8.6	FT
	TP - TOTAL LENGTH OF TOP PACKER AND ASSEMBLY	=	2.5	FT
	BP - TOTAL LENGTH OF BOTTOM PACKER AND ASSEMBLY	=	4.2	FT
	D - DISTANCE BETWEEN GROUND SURFACE AND TOP OF THE TEST ZONE	=	50.9	FT
	PIP- PACKER INFLATION PRESSURE	=	160	PSI
	H1- DISTANCE BETWEEN WATER PRESSURE GAUGE AND GROUND SURFACE	=	59.5	FT
	H2- DISTANCE BETWEEN GROUND SURFACE AND GROUND WATER TABLE	=	33	FT

GZA

BORING NO. /TEST NO. : MW-31 Test 5

PACKER TEST LOG

GZA GEOENVIRONMENTAL OF NEW YORK 440 NINTH AVENUE, 18th FLOOR NEW YORK, NEW YORK 10001 SCIENTISTS AND ENGINEERS	Client Entergy Indian Point Energy Center Buchanan, NY	BORING NO./TEST NO.	MW-31 Test 6
		SHEET	1 of 1
		FILE NO.	41.0017869.10
		PROJECT LOCATION	Indian Point Energy Center

CONTRACTOR	Aquifer Drilling & Testing, Inc.	BORING COORDINATES	N 462969.8368	E 604924.2169	
FOREMAN	D. Wood	GROUND SURFACE EL.(FT)	79.793	DATUM	NGVD 29
GZA ENG.	P. Mahon	FINAL BORING DEPTH (FT)	90	DATE START/END	1/18/06

DIAMETER OF DRILLED BOREHOLE 3.83 INCH

GROUND WATER DEPTH (STATIC WATER LEVEL DEPTH) 33.4 ft below ground surface

I.D. OF DRILLING RODS 2 INCH

TESTED INTERVAL FROM / TO (FT)	TIME (HR:MIN:SEC)	ELAPSED TIME (Δt MIN)	DEPTH TO WATER (FT)	DRAW DOWN (ΔH FT)	RECOVERY RATE (ΔH/Δt)
42.9-51.5	13:32	-	33.4	0.00	-
L= 8.6 ft	13:48	0.0	34.1	0.70	-
	13:52	10.0	34.1	0.70	-

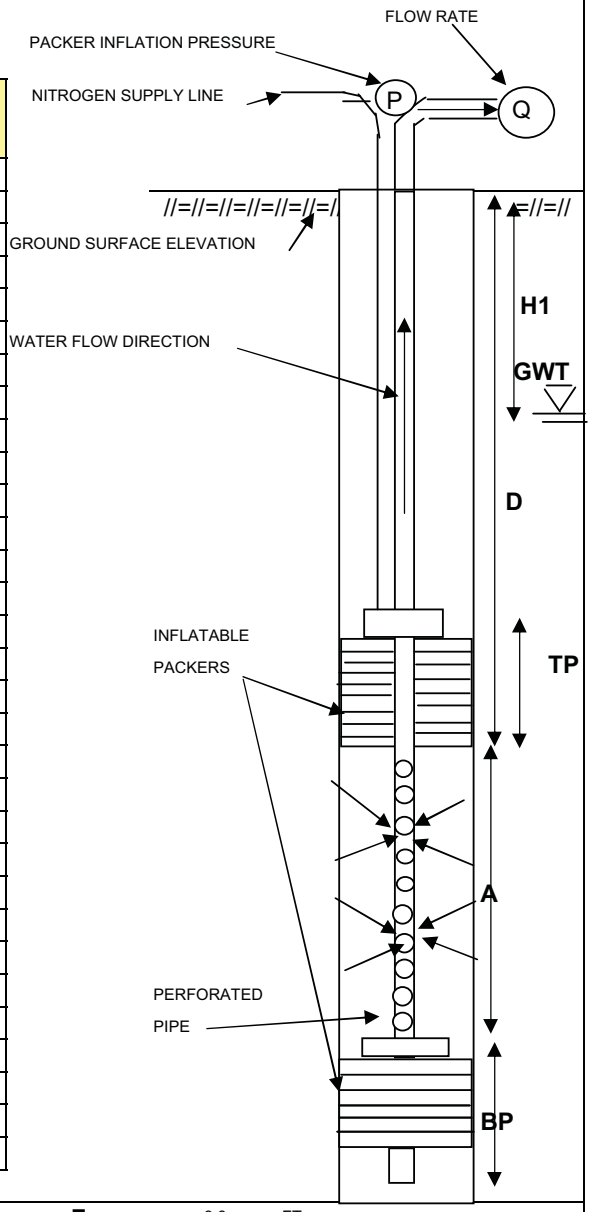

LEGEND:				
	A - TOTAL LENGTH OF TEST SECTION (FT)	=	8.6	FT
	TP - TOTAL LENGTH OF TOP PACKER AND ASSEMBLY	=	2.5	FT
	BP - TOTAL LENGTH OF BOTTOM PACKER AND ASSEMBLY	=	4.2	FT
	D - DISTANCE BETWEEN GROUND SURFACE AND TOP OF THE TEST ZONE	=	42.9	FT
	PIP- PACKER INFLATION PRESSURE	=	160	PSI
	H1- DISTANCE BETWEEN WATER PRESSURE GAUGE AND GROUND SURFACE	=	51.5	FT
	H2- DISTANCE BETWEEN GROUND SURFACE AND GROUND WATER TABLE	=	33.4	FT

*** A short duration constant head test was performed at this interval with a flow rate of 1.3 gpm and drawdown of 0.7 ft.**

PACKER TEST LOG

GZA GEOENVIRONMENTAL OF NEW YORK 440 NINTH AVENUE, 18th FLOOR NEW YORK, NEW YORK 10001 SCIENTISTS AND ENGINEERS	Client Entergy Indian Point Energy Center Buchanan, NY	BORING NO./TEST NO.	MW-31 Test 7
		SHEET	1 of 1
		FILE NO.	41.0017869.10
		PROJECT LOCATION	Indian Point Energy Center

CONTRACTOR	Aquifer Drilling & Testing, Inc.	BORING COORDINATES	N 462969.8368	E 604924.2169	
FOREMAN	D. Wood	GROUND SURFACE EL.(FT)	79.793	DATUM	NGVD 29
GZA ENG.	P. Mahon	FINAL BORING DEPTH (FT)	90	DATE START/END	1/18/06

DIAMETER OF DRILLED BOREHOLE 3.83 INCH

GROUND WATER DEPTH (STATIC WATER LEVEL DEPTH) 32.6 ft below ground surface

I.D. OF DRILLING RODS 2 INCH

TESTED INTERVAL FROM / TO (FT)	TIME (HR:MIN:SEC)	ELAPSED TIME (Δt MIN)	DEPTH TO WATER (FT)	DRAW DOWN (ΔH FT)	RECOVERY RATE (ΔH/Δt)
34.5-43.1	14:19	-	32.6	0.00	-
L= 8.6 ft	14:29	0.0	42.2	9.60	-
	14:39	10.0	38.8	6.20	0.62
	14:49	20.0	37.0	4.40	0.22
	14:59	30.0	34.0	1.40	0.05
	15:09	40.0	34.1	1.50	0.04

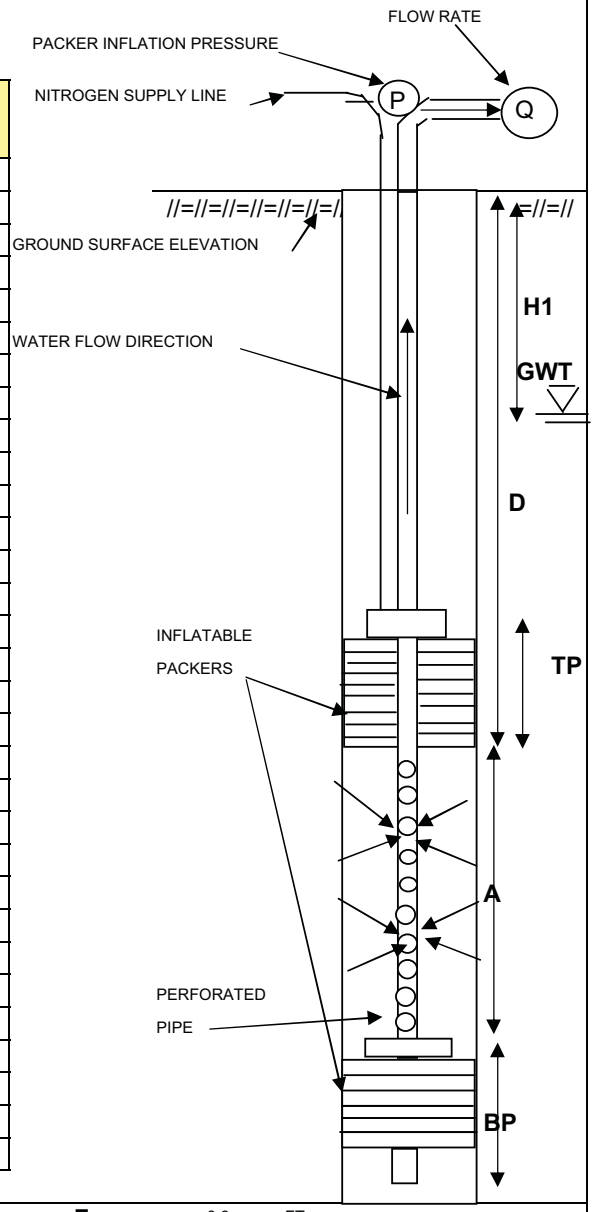

LEGEND:				
	A - TOTAL LENGTH OF TEST SECTION (FT)	=	8.6	FT
	TP - TOTAL LENGTH OF TOP PACKER AND ASSEMBLY	=	2.5	FT
	BP - TOTAL LENGTH OF BOTTOM PACKER AND ASSEMBLY	=	4.2	FT
	D - DISTANCE BETWEEN GROUND SURFACE AND TOP OF THE TEST ZONE	=	34.5	FT
	PIP- PACKER INFLATION PRESSURE	=	160	PSI
	H1- DISTANCE BETWEEN WATER PRESSURE GAUGE AND GROUND SURFACE	=	43.1	FT
	H2- DISTANCE BETWEEN GROUND SURFACE AND GROUND WATER TABLE	=	32.6	FT

PACKER TEST LOG

GZA GEOENVIRONMENTAL OF NEW YORK 440 NINTH AVENUE, 18th FLOOR NEW YORK, NEW YORK 10001 SCIENTISTS AND ENGINEERS	Client Entergy Indian Point Energy Center Buchanan, NY	BORING NO./TEST NO.	MW-32 T1
		SHEET	1 of 1
		FILE NO.	41.0017869.01
		PROJECT LOCATION	Indian Point

CONTRACTOR	Aquifer Drilling & Testing, Inc.	BORING COORDINATES	N 462.953.4787	E 604876.0269	
FOREMAN	Lloyd Adams	GROUND SURFACE EL.(FT)	78.898	DATUM	NGVD 29
GZA ENG.	Sara Covelli	FINAL BORING DEPTH (FT)	198.7	DATE START/END	3/27/06

DIAMETER OF DRILLED BOREHOLE 3.83 INCH

GROUND WATER DEPTH (STATIC WATER LEVEL DEPTH) 68.11 ft below ground surface

I.D. OF DRILLING RODS 2 INCH

TESTED INTERVAL FROM / TO (FT)	TIME (HR:MIN:SEC)	ELAPSED TIME (Δt MIN)	DEPTH TO WATER (FT)	CUMULATIVE RECOVERY (ΔH FT)	RECOVERY RATE (ΔH/Δt)
184.4-194.4	11:57	0.0	96.67	0.00	-
L= 10.0 ft	11:58	1	92.58	4.09	4.09
	11:59	2	89.74	6.93	3.47
	12:00	3	87.16	9.51	3.17
	12:01	4	84.84	11.83	2.96
	12:02	5	82.77	13.90	2.78
	12:03	6	80.88	15.79	2.63
	12:04	7	79.18	17.49	2.50
	12:05	8	77.68	18.99	2.37
	12:06	9	76.33	20.34	2.26
	12:07	10	75.11	21.56	2.16
	12:08	11	74.04	22.63	2.06
	12:09	12	73.10	23.57	1.96
	12:10	13	72.23	24.44	1.88
	12:11	14	71.51	25.16	1.80
	12:12	15	70.88	25.79	1.72
	12:13	16	70.35	26.32	1.65
	12:14	17	69.89	26.78	1.58
	12:15	18	69.54	27.13	1.51
	12:16	19	69.21	27.46	1.45
	12:17	20	69.95	26.72	1.34
	12:18	21	68.75	27.92	1.33
	12:19	22	68.59	28.08	1.28
	12:20	23	68.48	28.19	1.23
	12:21	24	68.39	28.28	1.18
	12:22	25	68.32	28.35	1.13

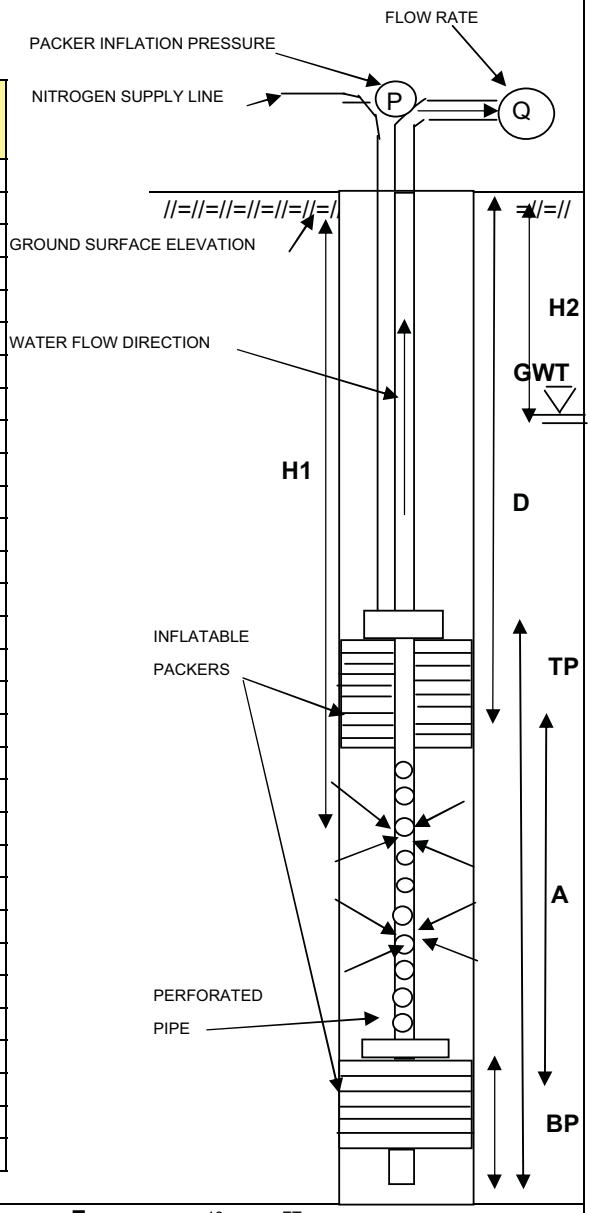

LEGEND:				
	A - TOTAL LENGTH OF TEST SECTION (FT)	=	10	FT
	TP - TOTAL LENGTH OF TOP PACKER AND ASSEMBLY	=	17.15	FT
	BP - TOTAL LENGTH OF BOTTOM PACKER AND ASSEMBLY	=	4.05	FT
	D - DISTANCE BETWEEN GROUND SURFACE AND TOP OF THE TEST ZONE	=	184.4	FT
	PIP - PACKER INFLATION PRESSURE (D PSI + **50 PSI**)	=	185	PSI
	H1- DISTANCE BETWEEN WATER PRESSURE GAUGE AND GROUND SURFACE	=	187	FT
	H2- DISTANCE BETWEEN GROUND SURFACE AND GROUND WATER TABLE	=	68.11	FT

GZA

BORING NO. /TEST NO. MW-32 T1

PACKER TEST LOG

GZA GEOENVIRONMENTAL OF NEW YORK 440 NINTH AVENUE, 18th FLOOR NEW YORK, NEW YORK 10001 SCIENTISTS AND ENGINEERS	Client Entergy Indian Point Energy Cente Buchanan, NY	BORING NO./TEST NO. MW-32 T2 SHEET 1 of 1 FILE NO. 41.0017869.01 PROJECT LOCATION Indian Point

CONTRACTOR	Aquifer Drilling & Testing, Inc.	BORING COORDINATES	N 462.953.4787	E 604876.0269	
FOREMAN	Lloyd Adams	GROUND SURFACE EL.(FT)	78.898	DATUM	NGVD 29
GZA ENG.	Sara Covelli	FINAL BORING DEPTH (FT)	198.7	DATE START/END	3/27/06

DIAMETER OF DRILLED BOREHOLE 3.83 INCH

GROUND WATER DEPTH 68.11 ft below ground surface
(STATIC WATER LEVEL DEPTH)

I.D. OF DRILLING RODS 2 INCH

TESTED INTERVAL FROM / TO (FT)	TIME (HR:MIN:SEC)	ELAPSED TIME (Δt MIN)	DEPTH TO WATER (FT)	DRAWDOWN (ΔH FT)	PUMPING RATE (gal/min)	SPECIFIC CAPACITY (Q/s)
174.4-184.4	14:15	0.0	71.48	3.37	0.714	0.212
L= 10.0 ft	14:16	1	71.50	3.39	0.714	0.211
	14:17	2	71.52	3.41	0.714	0.209
	14:18	3	71.52	3.41	0.714	0.209
	14:19	4	71.52	3.41	0.714	0.209
	14:20	5	71.52	3.41	0.714	0.209
	14:21	6	71.54	3.43	0.714	0.208
	14:22	7	71.60	3.49	0.714	0.205
	14:23	8	71.60	3.49	0.714	0.205
	14:24	9	71.56	3.45	0.714	0.207
	14:25	10	71.55	3.44	0.714	0.208
	14:26	11	71.55	3.44	0.714	0.208
	14:27	12	71.55	3.44	0.714	0.208
	14:28	13	71.54	3.43	0.714	0.208
	14:29	14	71.52	3.41	0.714	0.209
	14:30	15	71.52	3.41	0.714	0.209
	14:31	16	71.52	3.41	0.714	0.209

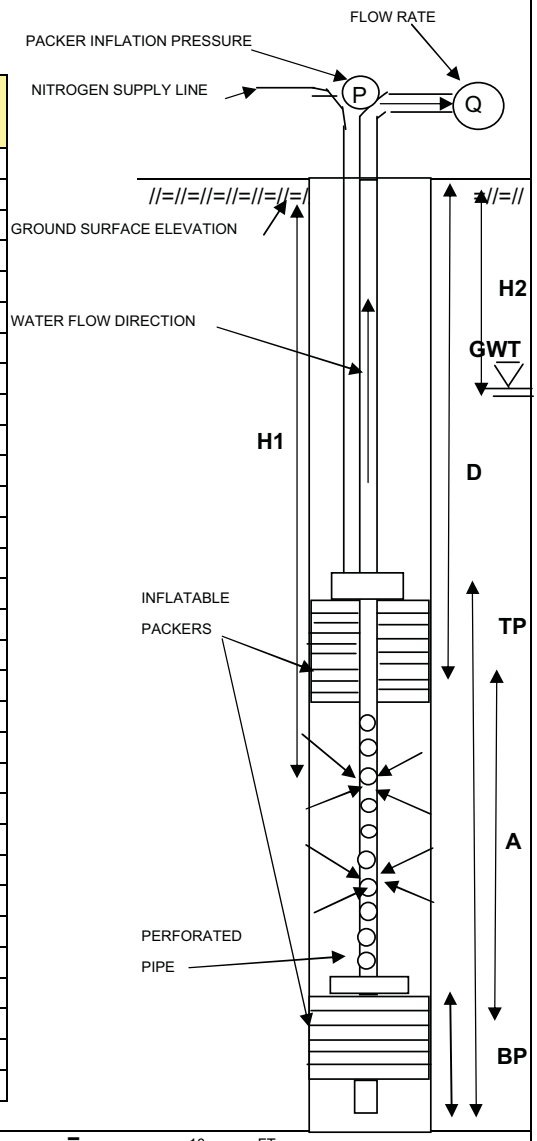

LEGEND:				
	A - TOTAL LENGTH OF TEST SECTION (FT)	=	10	FT
	TP - TOTAL LENGTH OF TOP PACKER AND ASSEMBLY	=	17.15	FT
	BP - TOTAL LENGTH OF BOTTOM PACKER AND ASSEMBLY	=	4.05	FT
	D - DISTANCE BETWEEN GROUND SURFACE AND TOP OF THE TEST ZONE	=	174.4	FT
	PIP - PACKER INFLATION PRESSURE (D PSI **+ 50 PSI**)	=	185	PSI
	H1- DISTANCE BETWEEN WATER PRESSURE GAUGE AND GROUND SURFACE	=	177	FT
	H2- DISTANCE BETWEEN GROUND SURFACE AND GROUND WATER TABLE	=	68.11	FT

GZA

BORING NO. /TEST NO. MW-32 T2

PACKER TEST LOG

GZA GEOENVIRONMENTAL OF NEW YORK 440 NINTH AVENUE, 18th FLOOR NEW YORK, NEW YORK 10001 SCIENTISTS AND ENGINEERS	Client Entergy Indian Point Energy Center Buchanan, NY	BORING NO./TEST NO.	MW-32 T3
		SHEET	1 of 1
		FILE NO.	41.0017869.01
		PROJECT LOCATION	Indian Point

CONTRACTOR	Aquifer Drilling & Testing, Inc.	BORING COORDINATES	N 462.953.4787	E 604876.0269	
FOREMAN	Lloyd Adams	GROUND SURFACE EL.(FT)	78.898	DATUM	NGVD 29
GZA ENG.	Sara Covelli	FINAL BORING DEPTH (FT)	198.7	DATE START/END	3/27/06

DIAMETER OF DRILLED BOREHOLE 3.83 INCH

GROUND WATER DEPTH (STATIC WATER LEVEL DEPTH) 68.11 ft below ground surface

I.D. OF DRILLING RODS 2 INCH

TESTED INTERVAL FROM / TO (FT)	TIME (HR:MIN:SEC)	ELAPSED TIME (Δt MIN)	DEPTH TO WATER (FT)	CUMULATIVE RECOVERY (ΔH FT)	RECOVERY RATE (ΔH/Δt)
169.4-179.4	15:19	0.0	82.98	0.00	-
L= 10.0 ft	15:20	1	77.06	5.92	5.92
	15:21	2	73.37	9.61	4.81
	15:22	3	71.25	11.73	3.91
	15:23	4	70.19	12.79	3.20
	15:24	5	69.61	13.37	2.67
	15:25	6	69.30	13.68	2.28
	15:26	7	69.08	13.90	1.99
	15:27	8	68.95	14.03	1.75
	15:28	9	68.82	14.16	1.57
	15:29	10	68.73	14.25	1.43
	15:30	11	68.67	14.31	1.30
	15:31	12	68.60	14.38	1.20

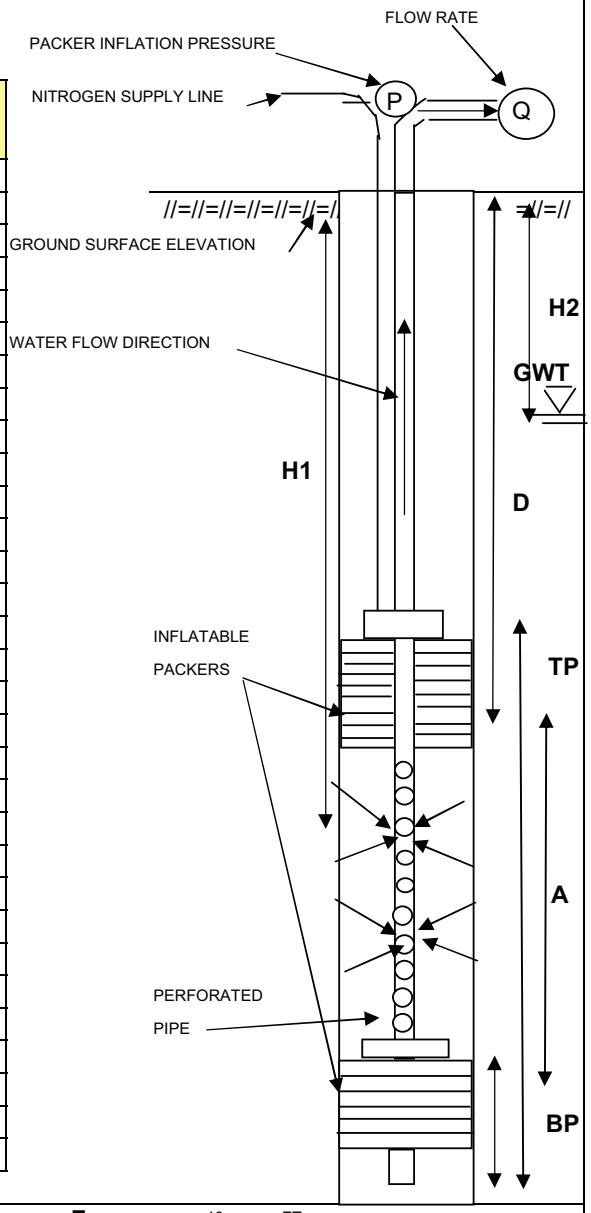

LEGEND:				
	A - TOTAL LENGTH OF TEST SECTION (FT)	=	10	FT
	TP - TOTAL LENGTH OF TOP PACKER AND ASSEMBLY	=	17.15	FT
	BP - TOTAL LENGTH OF BOTTOM PACKER AND ASSEMBLY	=	4.05	FT
	D - DISTANCE BETWEEN GROUND SURFACE AND TOP OF THE TEST ZONE	=	169.4	FT
	PIP - PACKER INFLATION PRESSURE (D PSI + **50 PSI**)	=	185	PSI
	H1- DISTANCE BETWEEN WATER PRESSURE GAUGE AND GROUND SURFACE	=	172	FT
	H2- DISTANCE BETWEEN GROUND SURFACE AND GROUND WATER TABLE	=	68.11	FT

GZA

BORING NO. /TEST NO. MW-32 T3

PACKER TEST LOG

GZA GEOENVIRONMENTAL OF NEW YORK 440 NINTH AVENUE, 18th FLOOR NEW YORK, NEW YORK 10001 SCIENTISTS AND ENGINEERS	Client Entergy Indian Point Energy Center Buchanan, NY	BORING NO./TEST NO.	MW-32 T4
		SHEET	1 of 1
		FILE NO.	41.0017869.01
		PROJECT LOCATION	Indian Point

CONTRACTOR	Aquifer Drilling & Testing, Inc.	BORING COORDINATES	N 462.953.4787	E 604876.0269	
FOREMAN	Lloyd Adams	GROUND SURFACE EL.(FT)	78.898	DATUM	NGVD 29
GZA ENG.	Sara Covelli	FINAL BORING DEPTH (FT)	198.7	DATE START/END	3/28/06

DIAMETER OF DRILLED BOREHOLE 3.83 INCH

GROUND WATER DEPTH (STATIC WATER LEVEL DEPTH) 68.11 ft below ground surface

I.D. OF DRILLING RODS 2 INCH

TESTED INTERVAL FROM / TO (FT)	TIME (HR:MIN:SEC)	ELAPSED TIME (Δt MIN)	DEPTH TO WATER (FT)	CUMULATIVE RECOVERY (ΔH FT)	RECOVERY RATE (ΔH/Δt)
147.4-157.4	15:01	0.0	87.80	0.00	-
L= 10.0 ft	15:02	1	84.05	3.75	3.75
	15:03	2	81.51	6.29	3.15
	15:04	3	79.31	8.49	2.83
	15:05	4	77.42	10.38	2.60
	15:06	5	75.77	12.03	2.41
	15:07	6	74.36	13.44	2.24
	15:08	7	73.14	14.66	2.09
	15:09	8	72.12	15.68	1.96
	15:10	9	71.20	16.60	1.84
	15:11	10	70.46	17.34	1.73
	15:12	11	69.82	17.98	1.63
	15:13	12	69.25	18.55	1.55
	15:14	13	68.79	19.01	1.46
	15:15	14	68.38	19.42	1.39
	15:16	15	68.05	19.75	1.32
	15:17	16	67.76	20.04	1.25
	15:18	17	67.52	20.28	1.19
	15:19	18	67.30	20.50	1.14
	15:20	19	67.12	20.68	1.09
	15:21	20	66.97	20.83	1.04
	15:22	21	66.83	20.97	1.00
	15:23	22	66.70	21.1	0.96
	15:24	23	66.59	21.21	0.92
	15:25	24	66.50	21.30	0.89
	15:26	25	66.41	21.39	0.86
	15:27	26	66.32	21.48	0.83
	15:28	27	66.25	21.55	0.80

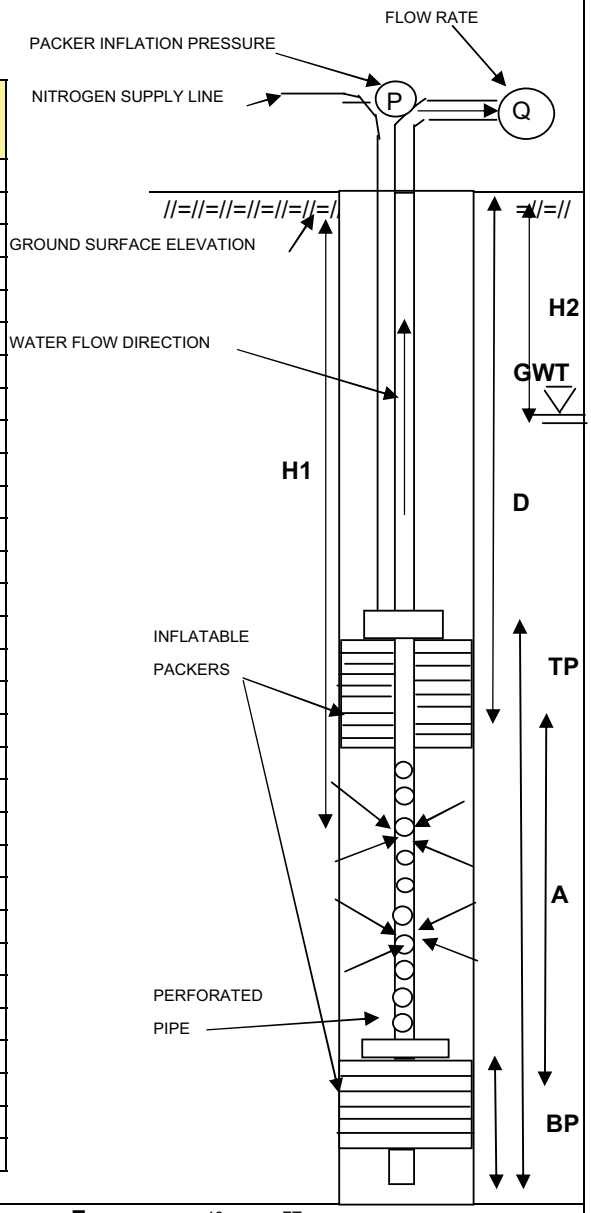

LEGEND:				
	A - TOTAL LENGTH OF TEST SECTION (FT)	=	10	FT
	TP - TOTAL LENGTH OF TOP PACKER AND ASSEMBLY	=	17.15	FT
	BP - TOTAL LENGTH OF BOTTOM PACKER AND ASSEMBLY	=	4.05	FT
	D - DISTANCE BETWEEN GROUND SURFACE AND TOP OF THE TEST ZONE	=	147.4	FT
	PIP - PACKER INFLATION PRESSURE (D PSI + **50 PSI**)	=	185	PSI
	H1- DISTANCE BETWEEN WATER PRESSURE GAUGE AND GROUND SURFACE	=	150	FT
	H2- DISTANCE BETWEEN GROUND SURFACE AND GROUND WATER TABLE	=	68.11	FT

GZA

BORING NO. /TEST NO. MW-32 T4

PACKER TEST LOG

GZA GEOENVIRONMENTAL OF NEW YORK 440 NINTH AVENUE, 18th FLOOR NEW YORK, NEW YORK 10001 SCIENTISTS AND ENGINEERS	Client Entergy Indian Point Energy Cente Buchanan, NY	BORING NO./TEST NO. MW-32 T5 SHEET 1 of 1 FILE NO. 41.0017869.01 PROJECT LOCATION Indian Point

CONTRACTOR	Aquifer Drilling & Testing, Inc.	BORING COORDINATES	N 462.953.4787	E 604876.0269	
FOREMAN	Lloyd Adams	GROUND SURFACE EL.(FT)	78.898	DATUM	NGVD 29
GZA ENG.	Sara Covelli	FINAL BORING DEPTH (FT)	198.7	DATE START/END	3/29/06

DIAMETER OF DRILLED BOREHOLE 3.83

GROUND WATER DEPTH (STATIC WATER LEVEL DEPTH) 68.11 ft below ground surface

I.D. OF DRILLING RODS 2

TESTED INTERVAL FROM / TO (FT)	TIME (HR:MIN:SEC)	ELAPSED TIME (Δt MIN)	TRANSDUCER PRESSURE HEAD (FT H2O)	DEPTH TO WATER (FT)	CUMULATIVE RECOVERY (ΔH FT)	RECOVERY RATE (ΔH/Δt)
130.4-140.4	9:49:00	0.0	52.933	80.07	0.00	-
L= 10.0 ft	9:49:30	0.5	55.570	77.43	2.64	5.28
	9:50:00	1.0	57.257	75.74	4.33	4.33
	9:50:30	1.5	58.903	74.10	5.97	3.98
	9:51:00	2.0	59.989	73.01	7.06	3.53
	9:51:30	2.5	61.099	71.90	8.17	3.27
	9:52:00	3.0	61.815	71.19	8.88	2.96
	9:52:30	3.5	62.534	70.47	9.60	2.74
	9:53:00	4.0	63.011	69.99	10.08	2.52
	9:53:30	4.5	63.487	69.51	10.56	2.35
	9:54:00	5.0	63.813	69.19	10.88	2.18
	9:54:30	5.5	64.137	68.86	11.21	2.04
	9:55:00	6.0	64.355	68.65	11.43	1.90
	9:55:30	6.5	64.593	68.41	11.66	1.79
	9:56:00	7.0	64.767	68.23	11.84	1.69
	9:56:30	7.5	64.942	68.06	12.01	1.60
	9:57:00	8.0	65.050	67.95	12.12	1.52
	9:57:30	8.5	65.182	67.82	12.25	1.44
	9:58:00	9.0	65.272	67.73	12.34	1.37
	9:58:30	9.5	65.382	67.62	12.45	1.31
	9:59:00	10.0	65.448	67.55	12.52	1.25
	9:59:30	10.5	65.538	67.46	12.61	1.20
	10:00:00	11.0	65.605	67.40	12.68	1.15
	10:00:30	11.5	65.672	67.33	12.74	1.11
	10:01:00	12.0	65.738	67.26	12.81	1.07
	10:01:30	12.5	65.805	67.20	12.88	1.03
	10:02:00	13.0	65.848	67.15	12.92	0.99
	10:02:30	13.5	65.893	67.11	12.96	0.96

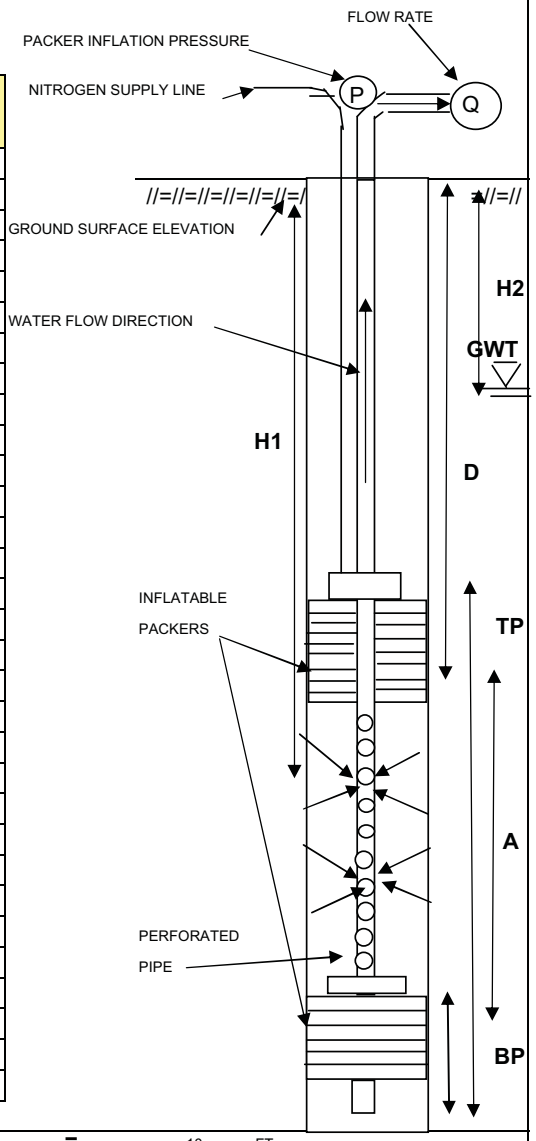

LEGEND:				
	A - TOTAL LENGTH OF TEST SECTION (FT)	=	10	FT
	TP - TOTAL LENGTH OF TOP PACKER AND ASSEMBLY	=	17.15	FT
	BP - TOTAL LENGTH OF BOTTOM PACKER AND ASSEMBLY	=	4.05	FT
	D - DISTANCE BETWEEN GROUND SURFACE AND TOP OF THE TEST ZONE	=	130.4	FT
	PIP - PACKER INFLATION PRESSURE (D PSI **+ 50 PSI**)	=	185	PSI
	H1- DISTANCE BETWEEN WATER PRESSURE GAUGE AND GROUND SURFACE	=	133	FT
	H2- DISTANCE BETWEEN GROUND SURFACE AND GROUND WATER TABLE	=	68.11	FT

GZA

BORING NO. /TEST NO. MW-32 T5

PACKER TEST LOG

GZA GEOENVIRONMENTAL OF NEW YORK 440 NINTH AVENUE, 18th FLOOR NEW YORK, NEW YORK 10001 SCIENTISTS AND ENGINEERS	Client Entergy Indian Point Energy Cente Buchanan, NY	BORING NO./TEST NO. MW-32 T6 SHEET 1 of 1 FILE NO. 41.0017869.01 PROJECT LOCATION Indian Point

CONTRACTOR	Aquifer Drilling & Testing, Inc.	BORING COORDINATES	N 462.953.4787	E 604876.0269	
FOREMAN	Lloyd Adams	GROUND SURFACE EL.(FT)	78.898	DATUM	NGVD 29
GZA ENG.	Sara Covelli	FINAL BORING DEPTH (FT)	198.7	DATE START/END	3/29/06

DIAMETER OF DRILLED BOREHOLE 3.83

GROUND WATER DEPTH (STATIC WATER LEVEL DEPTH) 68.11 ft below ground surface

I.D. OF DRILLING RODS 2

TESTED INTERVAL FROM / TO (FT)	TIME (HR:MIN:SEC)	ELAPSED TIME (Δt MIN)	TRANSDUCER PRESSURE HEAD (FT H2O)	DEPTH TO WATER (FT)	CUMULATIVE RECOVERY (ΔH FT)	RECOVERY RATE (ΔH/Δt)
116.4-126.4	10:48	0	30.688	88.31	0.00	-
L= 10.0 ft	10:49	1	33.404	85.60	2.72	5.43
	10:50	2	35.506	83.49	4.82	2.41
	10:51	3	37.390	81.61	6.70	2.23
	10:52	4	39.157	79.84	8.47	2.12
	10:53	5	40.736	78.26	10.05	2.01
	10:54	6	42.185	76.82	11.50	1.92
	10:55	7	43.510	75.49	12.82	1.83
	10:56	8	44.703	74.30	14.02	1.75
	10:57	9	45.769	73.23	15.08	1.68
	10:58	10	46.748	72.25	16.06	1.61
	10:59	11	47.574	71.43	16.89	1.54
	11:00	12	48.359	70.64	17.67	1.47
	11:01	13	49.056	69.94	18.37	1.41
	11:02	14	49.688	69.31	19.00	1.36
	11:03	15	50.253	68.75	19.57	1.30
	11:04	16	50.755	68.25	20.07	1.25
	11:05	17	51.234	67.77	20.55	1.21
	11:06	18	51.670	67.33	20.98	1.17
	11:07	19	52.062	66.94	21.37	1.12
	11:08	20	52.435	66.57	21.75	1.09
	11:09	21	52.806	66.19	22.12	1.05
	11:10	22	53.134	65.87	22.45	1.02
	11:11	23	53.461	65.54	22.77	0.99
	11:12	24	53.767	65.23	23.08	0.96
	11:13	25	54.052	64.95	23.36	0.93
	11:14	26	54.336	64.66	23.65	0.91

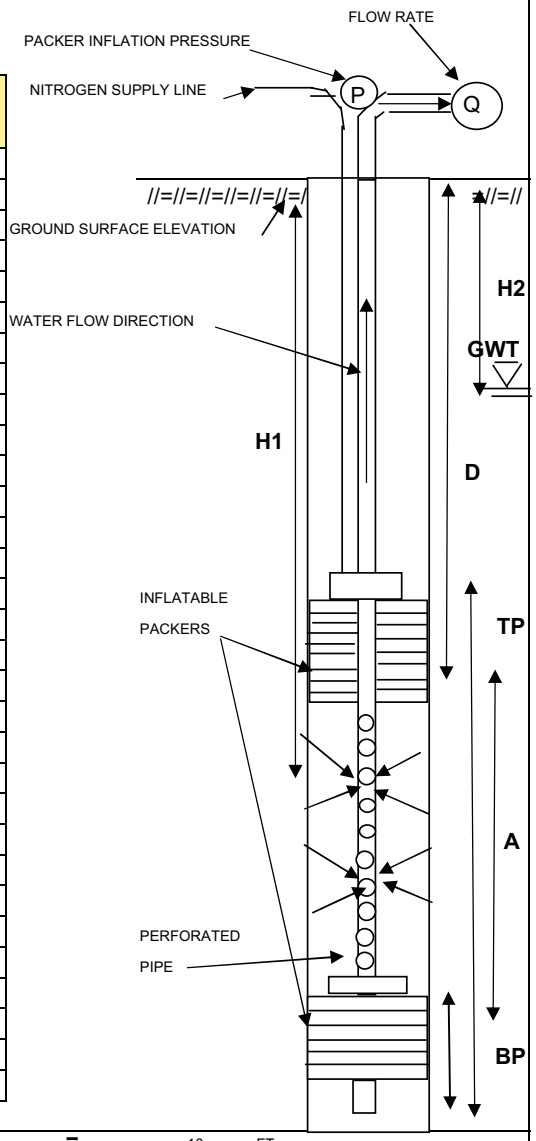

LEGEND:				
	A - TOTAL LENGTH OF TEST SECTION (FT)	=	10	FT
	TP - TOTAL LENGTH OF TOP PACKER AND ASSEMBLY	=	17.15	FT
	BP - TOTAL LENGTH OF BOTTOM PACKER AND ASSEMBLY	=	4.05	FT
	D - DISTANCE BETWEEN GROUND SURFACE AND TOP OF THE TEST ZONE	=	116.4	FT
	PIP - PACKER INFLATION PRESSURE (D PSI **+ 50 PSI**)	=	185	PSI
	H1- DISTANCE BETWEEN WATER PRESSURE GAUGE AND GROUND SURFACE	=	119	FT
	H2- DISTANCE BETWEEN GROUND SURFACE AND GROUND WATER TABLE	=	68.11	FT

GZA

BORING NO. /TEST NO. MW-32 T6

PACKER TEST LOG

GZA GEOENVIRONMENTAL OF NEW YORK 440 NINTH AVENUE, 18th FLOOR NEW YORK, NEW YORK 10001 SCIENTISTS AND ENGINEERS	Client Entergy Indian Point Energy Cente Buchanan, NY	BORING NO./TEST NO.	MW-32 T7
		SHEET	1 of 1
		FILE NO.	41.0017869.01
		PROJECT LOCATION	Indian Point

CONTRACTOR	Aquifer Drilling & Testing, Inc.	BORING COORDINATES	N 462.953.4787	E 604876.0269	
FOREMAN	Lloyd Adams	GROUND SURFACE EL.(FT)	78.898	DATUM	NGVD 29
GZA ENG.	Sara Covelli	FINAL BORING DEPTH (FT)	198.7	DATE START/END	3/29/06

DIAMETER OF DRILLED BOREHOLE 3.83

GROUND WATER DEPTH 68.11 ft below ground surface
(STATIC WATER LEVEL DEPTH)

I.D. OF DRILLING RODS 2

TESTED INTERVAL FROM / TO (FT)	TIME (HR:MIN:SEC)	ELAPSED TIME (Δt MIN)	TRANSDUCER PRESSURE HEAD (FT H2O)	DEPTH TO WATER (FT)	CUMULATIVE RECOVERY (ΔH FT)	RECOVERY RATE (ΔH/Δt)
79.4-89.4	14.06	0	1.915	80.09	0.00	-
L= 10.0 ft	14:07	1	3.512	78.49	1.60	3.19
	14:08	2	5.372	76.63	3.46	1.73
	14:09	3	7.177	74.82	5.26	1.75
	14:10	4	7.957	74.04	6.04	1.51
	14:11	5	8.676	73.32	6.76	1.35
	14:12	6	9.330	72.67	7.41	1.24
	14:13	7	9.941	72.06	8.03	1.15
	14:14	8	10.486	71.51	8.57	1.07
	14:15	9	10.966	71.03	9.05	1.01
	14:16	10	11.426	70.57	9.51	0.95
	14:17	11	11.926	70.07	10.01	0.91
	14:18	12	12.427	69.57	10.51	0.88
	14:19	13	12.906	69.09	10.99	0.85
	14:20	14	13.341	68.66	11.43	0.82
	14:21	15	13.756	68.24	11.84	0.79
	14:22	16	14.103	67.90	12.19	0.76
	14:23	17	14.432	67.57	12.52	0.74
	14:24	18	14.695	67.31	12.78	0.71
	14:25	19	14.935	67.07	13.02	0.69
	14:26	20	15.176	66.82	13.26	0.66
	14:27	21	15.372	66.63	13.46	0.64
	14:28	22	15.527	66.47	13.61	0.62
	14:29	23	15.681	66.32	13.77	0.60
	14:30	24	15.814	66.19	13.90	0.58
	14:31	25	15.930	66.07	14.02	0.56
	14:32	26	16.060	65.94	14.15	0.54
	14:33	27	16.146	65.85	14.23	0.53
	14:34	28	16.234	65.77	14.32	0.51
	14:35	29	16.300	65.70	14.39	0.50
	14:36	30	16.349	65.65	14.43	0.48
	14:37	31	16.398	65.60	14.48	0.47
	14:38	32	16.466	65.53	14.55	0.45
	14:39	33	16.513	65.49	14.60	0.44

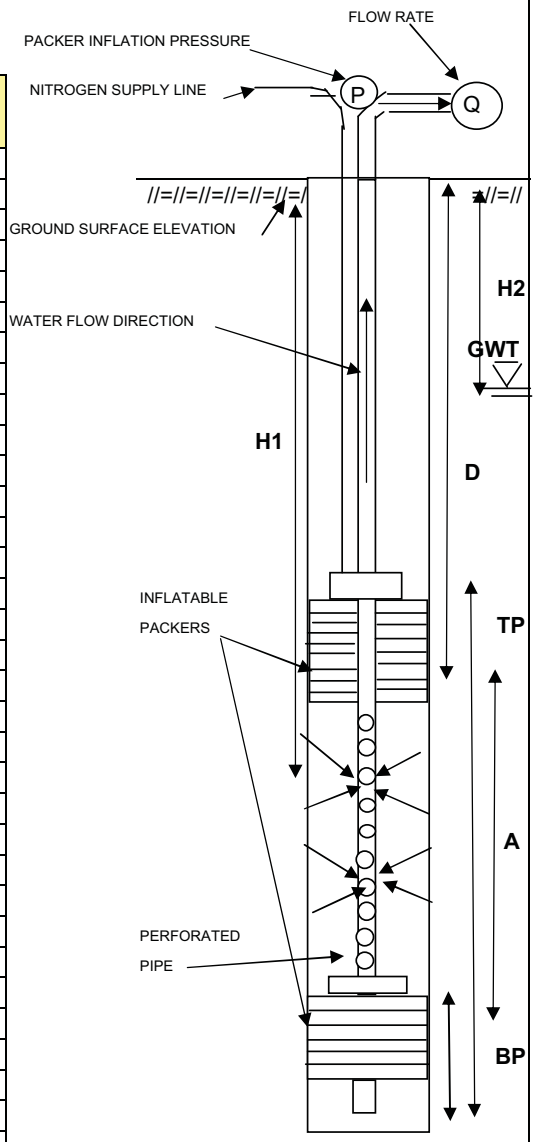

LEGEND:				
	A - TOTAL LENGTH OF TEST SECTION (FT)	=	10	FT
	TP - TOTAL LENGTH OF TOP PACKER AND ASSEMBLY	=	17.15	FT
	BP - TOTAL LENGTH OF BOTTOM PACKER AND ASSEMBLY	=	4.05	FT
	D - DISTANCE BETWEEN GROUND SURFACE AND TOP OF THE TEST ZONE	=	79.4	FT
	PIP - PACKER INFLATION PRESSURE (D PSI **+ 50 PSI**)	=	185	PSI
	H1- DISTANCE BETWEEN WATER PRESSURE GAUGE AND GROUND SURFACE	=	82	FT

PACKER TEST LOG

GZA GEOENVIRONMENTAL OF NEW YORK 440 NINTH AVENUE, 18th FLOOR NEW YORK, NEW YORK 10001 SCIENTISTS AND ENGINEERS	Client Entergy Indian Point Energy Cente Buchanan, NY	BORING NO./TEST NO. MW-32 T8 SHEET 1 of 1 FILE NO. 41.0017869.01 PROJECT LOCATION Indian Point

CONTRACTOR	Aquifer Drilling & Testing, Inc.	BORING COORDINATES	N 462.953.4787	E 604876.0269	
FOREMAN	Lloyd Adams	GROUND SURFACE EL.(FT)	78.898	DATUM	NGVD 29
GZA ENG.	Sara Covelli	FINAL BORING DEPTH (FT)	198.7	DATE START/END	3/29/06 -- 3/30/06

DIAMETER OF DRILLED BOREHOLE 3.83

GROUND WATER DEPTH (STATIC WATER LEVEL DEPTH) 68.11 ft below ground surface

I.D. OF DRILLING RODS 2

TESTED INTERVAL FROM / TO (FT)	TIME (HR:MIN:SEC)	ELAPSED TIME (Δt MIN)	TRANSDUCER PRESSURE HEAD (FT H2O)	DEPTH TO WATER (FT)	CUMULATIVE RECOVERY (ΔH FT)	RECOVERY RATE (ΔH/Δt)
69.4-79.4	15:13	0	0.304	71.70	0.00	-
L= 10.0 ft	15:16	3	0.325	71.68	0.02	0.00700
	15:17	4	0.348	71.65	0.04	0.01100
	15:19	6	0.353	71.65	0.05	0.00817
	15:21	8	0.381	71.62	0.08	0.00962
	15:23	10	0.401	71.60	0.10	0.00970
	15:33	20	0.496	71.50	0.19	0.00960
	15:43	30	0.568	71.43	0.26	0.00880
	15:53	40	0.645	71.36	0.34	0.00852
	16:03	50	0.705	71.30	0.40	0.00802
	16:13	60	0.796	71.20	0.49	0.00820
	17:13	120	1.393	70.61	1.09	0.00907
	18:13	180	1.887	70.11	1.58	0.00879
	19:13	240	3.904	68.10	3.60	0.01500
	20:13	300	5.572	66.43	5.27	0.01756
	21:13	360	6.505	65.50	6.20	0.01723
	22:13	420	7.329	64.67	7.02	0.01673
	23:13	480	7.633	64.37	7.33	0.01527
	0:13	540	7.851	64.15	7.55	0.01398
	1:13	600	8.067	63.93	7.76	0.01294
	2:13	660	8.241	63.76	7.94	0.01203
	3:13	720	8.393	63.61	8.09	0.01123
	4:13	780	8.524	63.48	8.22	0.01054
	5:13	840	8.589	63.41	8.29	0.00986

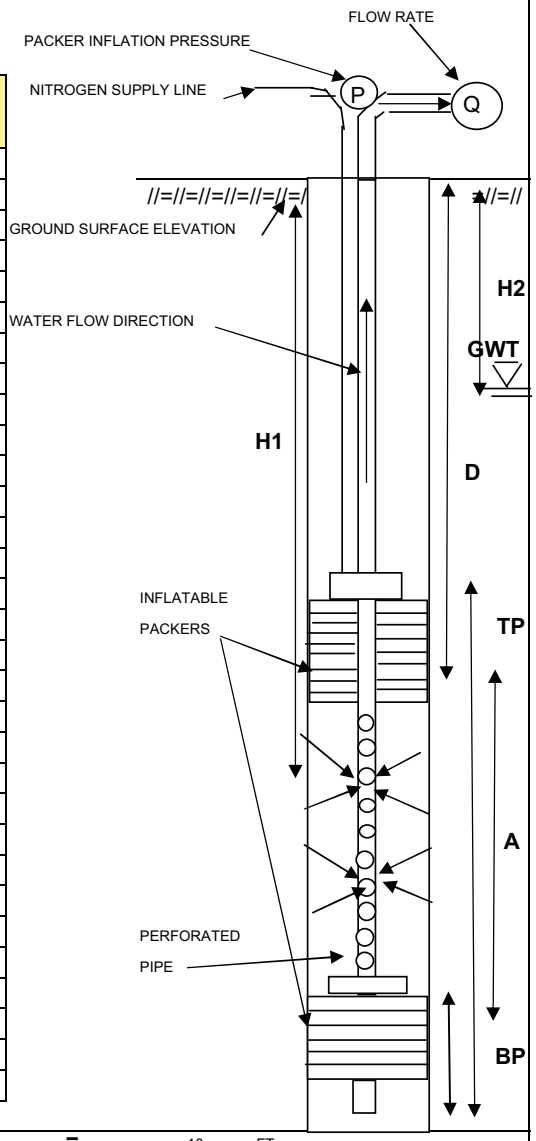

LEGEND:				
	A - TOTAL LENGTH OF TEST SECTION (FT)	=	10	FT
	TP - TOTAL LENGTH OF TOP PACKER AND ASSEMBLY	=	17.15	FT
	BP - TOTAL LENGTH OF BOTTOM PACKER AND ASSEMBLY	=	4.05	FT
	D - DISTANCE BETWEEN GROUND SURFACE AND TOP OF THE TEST ZONE	=	69.4	FT
	PIP - PACKER INFLATION PRESSURE (D PSI **+ 50 PSI**)	=	185	PSI
	H1- DISTANCE BETWEEN WATER PRESSURE GAUGE AND GROUND SURFACE	=	72	FT
	H2- DISTANCE BETWEEN GROUND SURFACE AND GROUND WATER TABLE	=	68.11	FT

GZA

BORING NO. /TEST NO. MW-32 T8

PACKER TEST LOG

GZA GEOENVIRONMENTAL OF NEW YORK 440 NINTH AVENUE, 18th FLOOR NEW YORK, NEW YORK 10001 SCIENTISTS AND ENGINEERS	Client Entergy Indian Point Energy Cente Buchanan, NY	BORING NO./TEST NO.	MW-39 T1
		SHEET	1 of 1
		FILE NO.	41.0017869.01
		PROJECT LOCATION	Indian Point

CONTRACTOR	Aquifer Drilling & Testing, Inc.	BORING COORDINATES	N 462425.5051	E 604676.8687	
FOREMAN	Lloyd Adams	GROUND SURFACE EL.(FT)	81.864	DATUM	NGVD 29
GZA ENG.	Sara Covelli	FINAL BORING DEPTH (FT)	199.3	DATE START/END	4/05/06
DIAMETER OF DRILLED BOREHOLE	3.83 INCH	GROUND WATER DEPTH (STATIC WATER LEVEL DEPTH)	57.12 FT (from ground)		0.37 FT ground to casing
I.D. OF DRILLING RODS	2 INCH				

TESTED INTERVAL FROM / TO (FT)	TIME (HR:MIN:SEC)	ELAPSED TIME (Δt MIN)	DEPTH UNDER WATER (FT)	DEPTH TO WATER (FT)	CUMULATIVE RECOVERY (ΔH FT)	RECOVERY RATE (ΔH/Δt)
183.2-193.2	11:21	0	113.287	76.71	0.00	-
L= 10.0 ft	11:22	1	116.042	73.96	2.76	2.75500
	11:23	2	118.648	71.35	5.36	2.68050
	11:24	3	121.043	68.96	7.76	2.58533
	11:25	4	123.136	66.86	9.85	2.46225
	11:26	5	124.961	65.04	11.67	2.33480
	11:27	6	126.529	63.47	13.24	2.20700
	11:28	7	127.865	62.14	14.58	2.08257
	11:29	8	128.967	61.03	15.68	1.96000
	11:30	9	129.876	60.12	16.59	1.84322
	11:31	10	130.582	59.42	17.30	1.72950
	11:32	11	131.163	58.84	17.88	1.62509
	11:33	12	131.617	58.38	18.33	1.52750
	11:34	13	131.956	58.04	18.67	1.43608
	11:35	14	132.202	57.80	18.92	1.35107
	11:36	15	132.371	57.63	19.08	1.27227
	11:37	16	132.473	57.53	19.19	1.19913
	11:38	17	132.527	57.47	19.24	1.13176

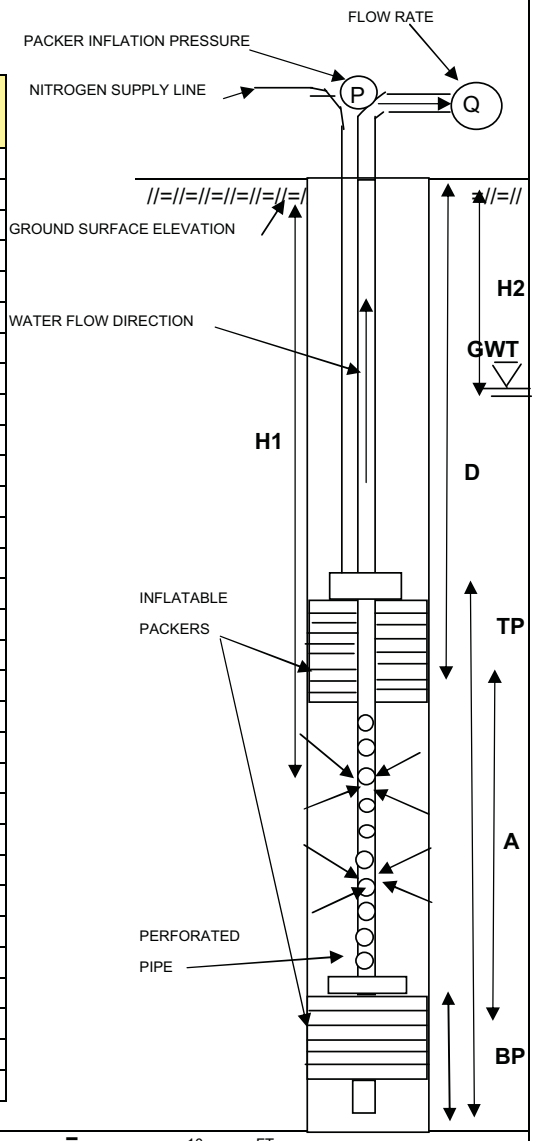

LEGEND:				
	A - TOTAL LENGTH OF TEST SECTION (FT)	=	10	FT
	TP - TOTAL LENGTH OF TOP PACKER AND ASSEMBLY	=	16.65	FT
	BP - TOTAL LENGTH OF BOTTOM BACKER AND ASSEMBLY	=	3.6	FT
	D - DISTANCE BETWEEN GROUND SURFACE AND TOP OF THE TEST ZONE	=	183.2	FT
	PIP - PACKER INFLATION PRESSURE (D PSI **+ 50 PSI**)	=	185	PSI
	H1- DISTANCE BETWEEN WATER PRESSURE GAUGE AND GROUND SURFACE	=	190	FT
	H2- DISTANCE BETWEEN GROUND SURFACE AND GROUND WATER TABLE	=	57.12	FT

GZA

BORING NO. /TEST NO. MW-39 T1

PACKER TEST LOG

GZA GEOENVIRONMENTAL OF NEW YORK 440 NINTH AVENUE, 18th FLOOR NEW YORK, NEW YORK 10001 SCIENTISTS AND ENGINEERS	Client Entergy Indian Point Energy Cente Buchanan, NY	BORING NO./TEST NO.	MW-39 T2
		SHEET	1 of 1
		FILE NO.	41.0017869.01
		PROJECT LOCATION	Indian Point

CONTRACTOR	Aquifer Drilling & Testing, Inc.	BORING COORDINATES	N 462425.5051	E 604676.8687	
FOREMAN	Lloyd Adams	GROUND SURFACE EL.(FT)	81.864	DATUM	NGVD 29
GZA ENG.	Sara Covelli	FINAL BORING DEPTH (FT)	199.3	DATE START/END	4/05/06
DIAMETER OF DRILLED BOREHOLE	3.83 INCH	GROUND WATER DEPTH (STATIC WATER LEVEL DEPTH)	57.12 FT (from ground)		0.37 FT ground to casing
I.D. OF DRILLING RODS	2 INCH				

TESTED INTERVAL FROM / TO (FT)	TIME (HR:MIN:SEC)	ELAPSED TIME (Δt MIN)	DEPTH UNDER WATER (FT)	DEPTH TO WATER (FT)	CUMULATIVE RECOVERY (ΔH FT)	RECOVERY RATE (ΔH/Δt)
175-185	13:31	0	105.366	76.43	0.00	-
L= 10.0 ft	13:32	1	107.407	74.39	2.04	2.04100
	13:33	2	109.193	72.61	3.83	1.91350
	13:34	3	110.809	70.99	5.44	1.81433
	13:35	4	112.313	69.49	6.95	1.73675
	13:36	5	113.711	68.09	8.35	1.66900
	13:37	6	115.016	66.78	9.65	1.60833
	13:38	7	116.234	65.57	10.87	1.55257
	13:39	8	117.385	64.42	12.02	1.50238
	13:40	9	118.454	63.35	13.09	1.45422
	13:41	10	119.459	62.34	14.09	1.40930
	13:42	11	120.392	61.41	15.03	1.36600
	13:43	12	121.200	60.60	15.83	1.31950
	13:44	13	121.873	59.93	16.51	1.26977
	13:45	14	122.433	59.37	17.07	1.21907
	13:46	15	122.884	58.92	17.52	1.16787
	13:47	16	123.257	58.54	17.89	1.11819
	13:48	17	123.553	58.25	18.19	1.06982
	13:49	18	123.776	58.02	18.41	1.02278
	13:50	19	123.946	57.85	18.58	0.97789
	13:51	20	124.084	57.72	18.72	0.93590
	13:52	21	124.166	57.63	18.80	0.89524
	13:53	22	124.222	57.58	18.86	0.85709
	13:54	23	124.256	57.54	18.89	0.82130
	13:55	24	124.272	57.53	18.91	0.78775
	13:56	25	124.284	57.52	18.92	0.75672

NOTES: Due to high communication between the IN ZONE and BELOW ZONE at this test interval, results for this packer test may not be valid. Three additional attempts (at depth intervals 174-184 ft, 176-186 ft, and 177-187 ft) were made to eliminate this communication. However, all three additional intervals showed the same excess communication between the IN ZONE and BELOW ZONE.

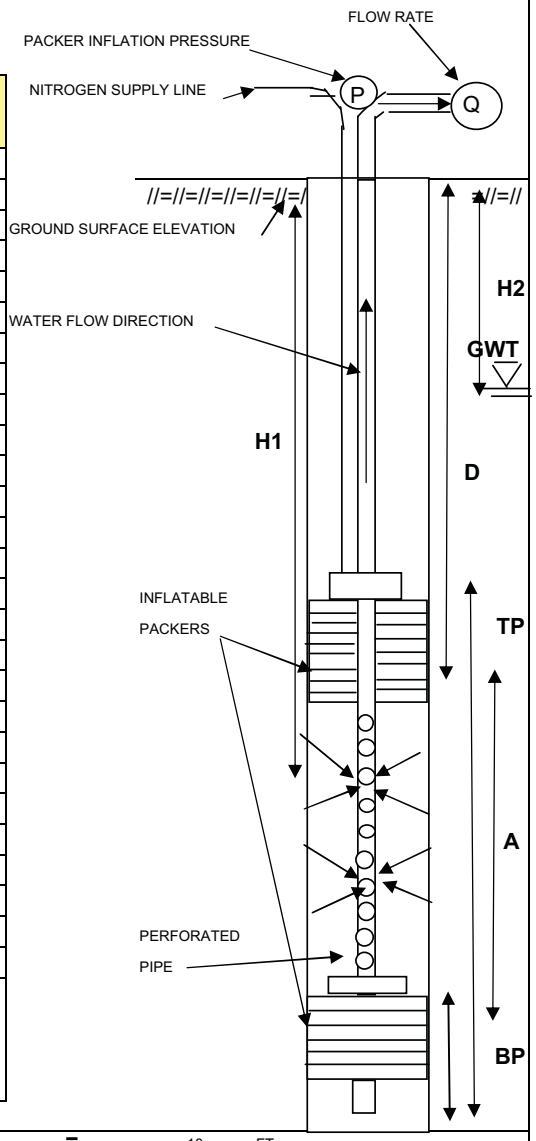

LEGEND:				
	A - TOTAL LENGTH OF TEST SECTION (FT)	=	10	FT
	TP - TOTAL LENGTH OF TOP PACKER AND ASSEMBLY	=	16.65	FT
	BP - TOTAL LENGTH OF BOTTOM BACKER AND ASSEMBLY	=	3.6	FT
	D - DISTANCE BETWEEN GROUND SURFACE AND TOP OF THE TEST ZONE	=	175	FT
	PIP - PACKER INFLATION PRESSURE (D PSI **+ 50 PSI**)	=	185	PSI
	H1- DISTANCE BETWEEN WATER PRESSURE GAUGE AND GROUND SURFACE	=	181.8	FT
	H2- DISTANCE BETWEEN GROUND SURFACE AND GROUND WATER TABLE	=	57.12	FT

GZA

BORING NO. /TEST NO. MW-39 T2

PACKER TEST LOG

GZA GEOENVIRONMENTAL OF NEW YORK 440 NINTH AVENUE, 18th FLOOR NEW YORK, NEW YORK 10001 SCIENTISTS AND ENGINEERS	Client Entergy Indian Point Energy Cente Buchanan, NY	BORING NO./TEST NO.	MW-39 T3
		SHEET	1 of 1
		FILE NO.	41.0017869.01
		PROJECT LOCATION	Indian Point

CONTRACTOR	Aquifer Drilling & Testing, Inc.	BORING COORDINATES	N 462425.5051	E 604676.8687	
FOREMAN	Lloyd Adams	GROUND SURFACE EL.(FT)	81.864	DATUM	NGVD 29
GZA ENG.	Sara Covelli	FINAL BORING DEPTH (FT)	199.3	DATE START/END	4/05/06 -- 4/06/06
DIAMETER OF DRILLED BOREHOLE	3.83 INCH	GROUND WATER DEPTH (STATIC WATER LEVEL DEPTH)	57.12 FT (from ground)		0.37 FT ground to casing
I.D. OF DRILLING RODS	2 INCH				

TESTED INTERVAL FROM / TO (FT)	TIME (HR:MIN:SEC)	ELAPSED TIME (Δt MIN)	DEPTH UNDER WATER (FT)	DEPTH TO WATER (FT)	CUMULATIVE RECOVERY (ΔH FT)	RECOVERY RATE (ΔH/Δt)
165-175	14:32	0	92.892	78.91	0.00	-
L= 10.0 ft	14:33	1	93.008	78.79	0.12	0.11600
	14:34	2	93.062	78.74	0.17	0.08500
	14:35	3	93.092	78.71	0.20	0.06667
	14:36	4	93.150	78.65	0.26	0.06450
	14:37	5	93.216	78.58	0.32	0.06480
	14:38	6	93.268	78.53	0.38	0.06267
	14:39	7	93.313	78.49	0.42	0.06014
	14:40	8	93.369	78.43	0.48	0.05963
	14:41	9	93.408	78.39	0.52	0.05733
	14:42	10	93.458	78.34	0.57	0.05660
	14:52	20	93.928	77.87	1.04	0.05180
	15:02	30	94.341	77.46	1.45	0.04830
	15:12	40	94.721	77.08	1.83	0.04573
	15:22	50	95.086	76.71	2.19	0.04388
	15:32	60	95.436	76.36	2.54	0.04240
	16:32	120	97.305	74.50	4.41	0.03678
	17:32	180	98.904	72.90	6.01	0.03340
	18:32	240	100.307	71.49	7.42	0.03090
	19:32	300	101.544	70.26	8.65	0.02884
	20:32	360	102.656	69.14	9.76	0.02712
	21:32	420	103.658	68.14	10.77	0.02563
	22:32	480	104.580	67.22	11.69	0.02435
	23:32	540	105.407	66.39	12.52	0.02318
	0:32	600	106.164	65.64	13.27	0.02212
	1:32	660	106.856	64.94	13.96	0.02116
	2:32	720	107.487	64.31	14.60	0.02027
	3:32	780	108.064	63.74	15.17	0.01945
	4:32	840	108.599	63.20	15.71	0.01870
	5:32	900	109.084	62.72	16.19	0.01799
	6:32	960	109.531	62.27	16.64	0.01733
	7:32	1020	109.933	61.87	17.04	0.01671

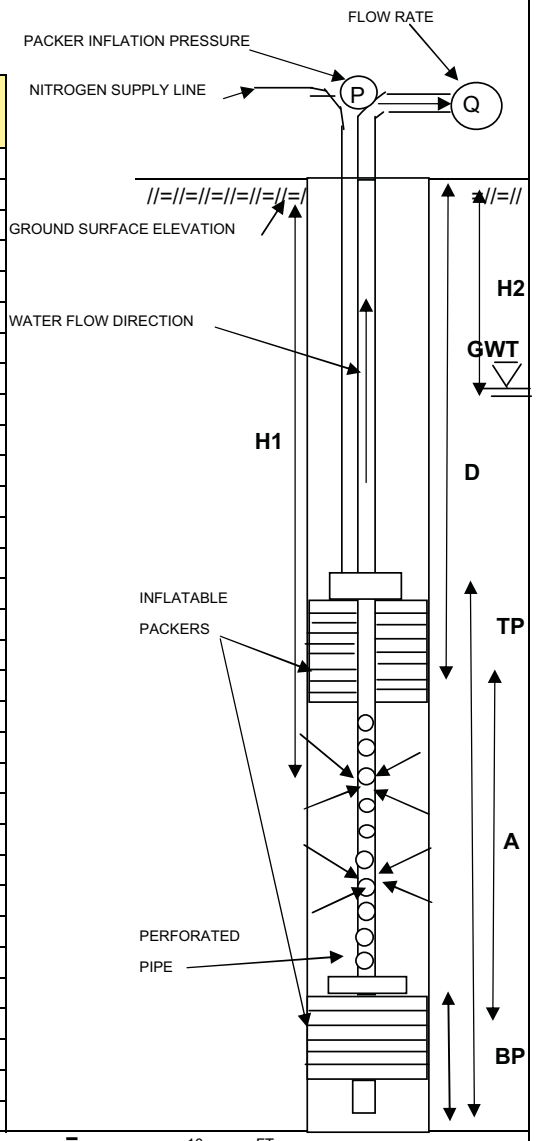

LEGEND:				
A - TOTAL LENGTH OF TEST SECTION (FT)	=	10	FT
TP - TOTAL LENGTH OF TOP PACKER AND ASSEMBLY	=	16.65	FT
BP - TOTAL LENGTH OF BOTTOM BACKER AND ASSEMBLY	=	3.6	FT
D - DISTANCE BETWEEN GROUND SURFACE AND TOP OF THE TEST ZONE	=	165	FT
PIP - PACKER INFLATION PRESSURE (D PSI **+ 50 PSI**)	=	185	PSI
H1- DISTANCE BETWEEN WATER PRESSURE GAUGE AND GROUND SURFACE	=	171.8	FT
H2- DISTANCE BETWEEN GROUND SURFACE AND GROUND WATER TABLE	=	57.12	FT

GZA

BORING NO. /TEST NO. MW-39 T3

PACKER TEST LOG

GZA GEOENVIRONMENTAL OF NEW YORK 440 NINTH AVENUE, 18th FLOOR NEW YORK, NEW YORK 10001 SCIENTISTS AND ENGINEERS	Client Entergy Indian Point Energy Cente Buchanan, NY	BORING NO./TEST NO.	MW-39 T4
		SHEET	1 of 1
		FILE NO.	41.0017869.01
		PROJECT LOCATION	Indian Point

CONTRACTOR	Aquifer Drilling & Testing, Inc.	BORING COORDINATES	N 462425.5051	E 604676.8687	
FOREMAN	Lloyd Adams	GROUND SURFACE EL.(FT)	81.864	DATUM	NGVD 29
GZA ENG.	Sara Covelli	FINAL BORING DEPTH (FT)	199.3	DATE START/END	4/06/06
DIAMETER OF DRILLED BOREHOLE	3.83 INCH	GROUND WATER DEPTH (STATIC WATER LEVEL DEPTH)	57.12 FT (from ground)		0.37 FT ground to casing
I.D. OF DRILLING RODS	2 INCH				

TESTED INTERVAL FROM / TO (FT)	TIME (HR:MIN:SEC)	ELAPSED TIME (Δt MIN)	DEPTH UNDER WATER (FT)	DEPTH TO WATER (FT)	CUMULATIVE RECOVERY (ΔH FT)	RECOVERY RATE (ΔH/Δt)
152.2-162.2	8:40	0	93.258	65.74	0.00	-
L= 10.0 ft	8:41	1	93.364	65.64	0.11	0.10600
	8:42	2	93.440	65.56	0.18	0.09100
	8:43	3	93.476	65.52	0.22	0.07267
	8:44	4	93.526	65.47	0.27	0.06700
	8:45	5	93.595	65.41	0.34	0.06740
	8:46	6	93.652	65.35	0.39	0.06567
	8:47	7	93.711	65.29	0.45	0.06471
	8:48	8	93.771	65.23	0.51	0.06413
	8:49	9	93.831	65.17	0.57	0.06367
	8:50	10	93.891	65.11	0.63	0.06330
	8:55	15	94.181	64.82	0.92	0.06153
	9:00	20	94.456	64.54	1.20	0.05990
	9:05	25	94.724	64.28	1.47	0.05864
	9:10	30	94.983	64.02	1.73	0.05750
	9:15	35	95.220	63.78	1.96	0.05606
	9:20	40	95.433	63.57	2.18	0.05438
	9:25	45	95.644	63.36	2.39	0.05302
	9:30	50	95.838	63.16	2.58	0.05160
	9:35	55	96.033	62.97	2.78	0.05045
	9:40	60	96.225	62.78	2.97	0.04945
	9:45	65	96.413	62.59	3.16	0.04854
	9:50	70	96.599	62.40	3.34	0.04773
	9:55	75	96.780	62.22	3.52	0.04696
	10:00	80	96.950	62.05	3.69	0.04615

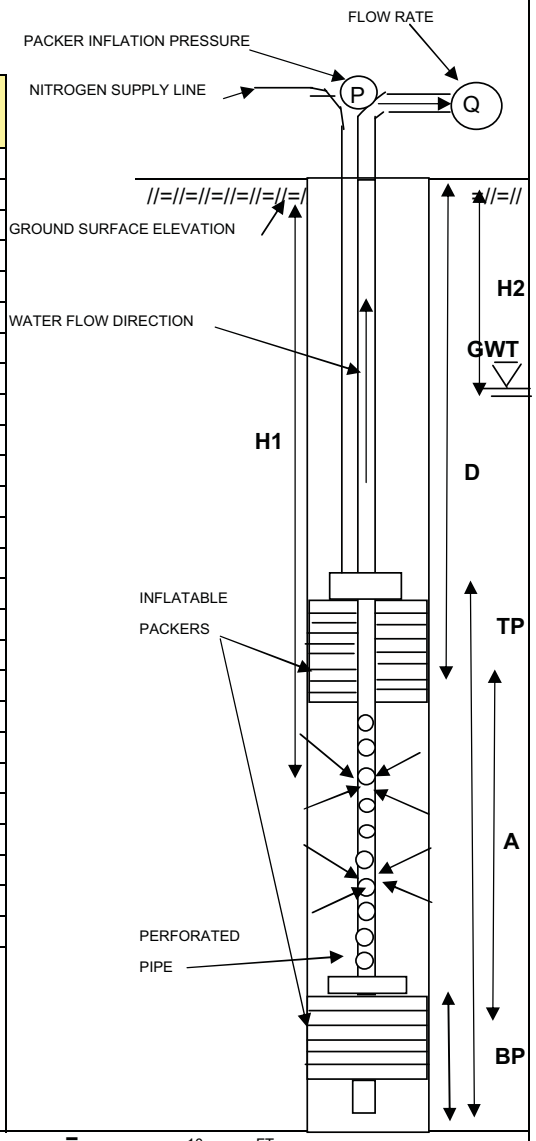

NOTES: Due to time constraints, a full recovery could not be achieved at this interval.

LEGEND:				
A - TOTAL LENGTH OF TEST SECTION (FT)	=	10	FT
TP - TOTAL LENGTH OF TOP PACKER AND ASSEMBLY	=	16.65	FT
BP - TOTAL LENGTH OF BOTTOM BACKER AND ASSEMBLY	=	3.6	FT
D - DISTANCE BETWEEN GROUND SURFACE AND TOP OF THE TEST ZONE	=	152.2	FT
PIP - PACKER INFLATION PRESSURE (D PSI **+ 50 PSI**)	=	185	PSI
H1- DISTANCE BETWEEN WATER PRESSURE GAUGE AND GROUND SURFACE	=	159	FT
H2- DISTANCE BETWEEN GROUND SURFACE AND GROUND WATER TABLE	=	57.12	FT

GZA

BORING NO. /TEST NO. MW-39 T4

PACKER TEST LOG

GZA GEOENVIRONMENTAL OF NEW YORK 440 NINTH AVENUE, 18th FLOOR NEW YORK, NEW YORK 10001 SCIENTISTS AND ENGINEERS	Client Entergy Indian Point Energy Cente Buchanan, NY	BORING NO./TEST NO.	MW-39 T5
		SHEET	1 of 1
		FILE NO.	41.0017869.01
		PROJECT LOCATION	Indian Point

CONTRACTOR	Aquifer Drilling & Testing, Inc.	BORING COORDINATES	N 462425.5051	E 604676.8687	
FOREMAN	Lloyd Adams	GROUND SURFACE EL.(FT)	81.864	DATUM	NGVD 29
GZA ENG.	Sara Covelli	FINAL BORING DEPTH (FT)	199.3	DATE START/END	4/06/06
DIAMETER OF DRILLED BOREHOLE	3.83 INCH	GROUND WATER DEPTH (STATIC WATER LEVEL DEPTH)	57.12 FT (from ground)		0.37 FT ground to casing
I.D. OF DRILLING RODS	2 INCH				

TESTED INTERVAL FROM / TO (FT)	TIME (HR:MIN:SEC)	ELAPSED TIME (Δt MIN)	DEPTH UNDER WATER (FT)	DEPTH TO WATER (FT)	CUMULATIVE RECOVERY (ΔH FT)	RECOVERY RATE (ΔH/Δt)
139.2-149.2	13:56	0	77.373	68.63	0.00	-
L= 10.0 ft	13:57	1	77.652	68.35	0.28	0.27900
	13:58	2	77.871	68.13	0.50	0.24900
	13:59	3	78.096	67.90	0.72	0.24100
	14:00	4	78.313	67.69	0.94	0.23500
	14:01	5	78.522	67.48	1.15	0.22980
	14:02	6	78.727	67.27	1.35	0.22567
	14:03	7	78.930	67.07	1.56	0.22243
	14:04	8	79.130	66.87	1.76	0.21962
	14:05	9	79.322	66.68	1.95	0.21656
	14:06	10	79.515	66.49	2.14	0.21420
	14:16	20	81.235	64.77	3.86	0.19310
	14:26	30	82.673	63.33	5.30	0.17667
	14:36	40	83.900	62.10	6.53	0.16318
	14:46	50	84.931	61.07	7.56	0.15116
	14:56	60	85.791	60.21	8.42	0.14030
	15:06	70	86.514	59.49	9.14	0.13059
	15:16	80	87.110	58.89	9.74	0.12171
	15:26	90	87.618	58.38	10.25	0.11383
	15:36	100	88.028	57.97	10.66	0.10655
	15:46	110	88.361	57.64	10.99	0.09989
	15:56	120	88.635	57.37	11.26	0.09385
	16:06	130	88.832	57.17	11.46	0.08815
	16:16	140	88.957	57.04	11.58	0.08274
	16:26	150	89.035	56.97	11.66	0.07775
	16:36	160	89.074	56.93	11.70	0.07313
	16:46	170	89.091	56.91	11.72	0.06893
	16:56	180	89.103	56.90	11.73	0.06517

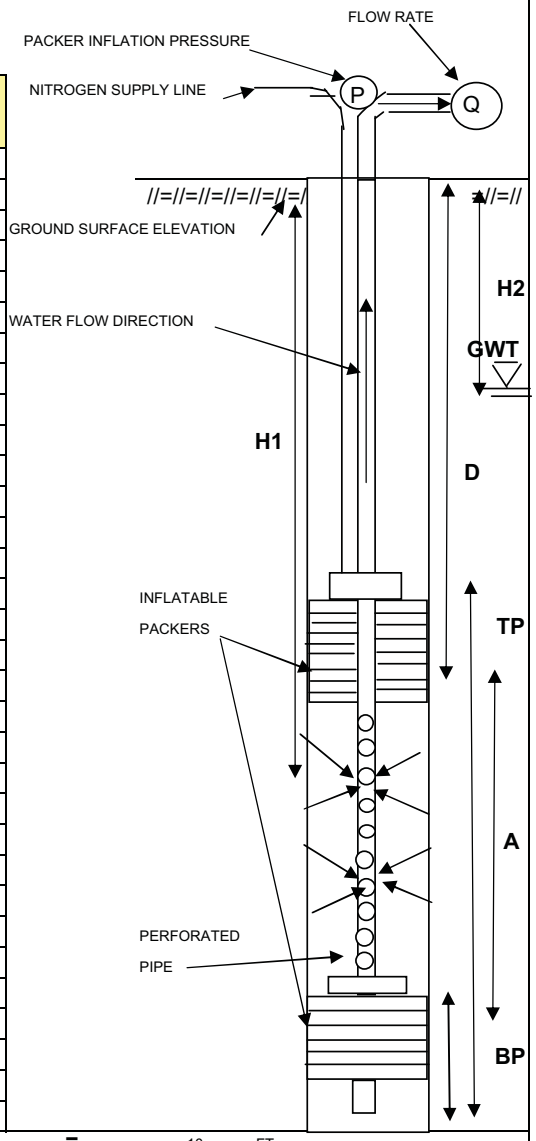

LEGEND:				
A - TOTAL LENGTH OF TEST SECTION (FT)	=	10	FT
TP - TOTAL LENGTH OF TOP PACKER AND ASSEMBLY	=	16.65	FT
BP - TOTAL LENGTH OF BOTTOM BACKER AND ASSEMBLY	=	3.6	FT
D - DISTANCE BETWEEN GROUND SURFACE AND TOP OF THE TEST ZONE	=	139.2	FT
PIP - PACKER INFLATION PRESSURE (D PSI **+ 50 PSI**)	=	185	PSI
H1- DISTANCE BETWEEN WATER PRESSURE GAUGE AND GROUND SURFACE	=	146	FT
H2- DISTANCE BETWEEN GROUND SURFACE AND GROUND WATER TABLE	=	57.12	FT

GZA

BORING NO. /TEST NO. MW-39 T5

PACKER TEST LOG

GZA GEOENVIRONMENTAL OF NEW YORK 440 NINTH AVENUE, 18th FLOOR NEW YORK, NEW YORK 10001 SCIENTISTS AND ENGINEERS	Client Entergy Indian Point Energy Cente Buchanan, NY	BORING NO./TEST NO.	MW-39 T6
		SHEET	1 of 1
		FILE NO.	41.0017869.01
		PROJECT LOCATION	Indian Point

CONTRACTOR	Aquifer Drilling & Testing, Inc.	BORING COORDINATES	N 462425.5051	E 604676.8687	
FOREMAN	Lloyd Adams	GROUND SURFACE EL.(FT)	81.864	DATUM	NGVD 29
GZA ENG.	Sara Covelli	FINAL BORING DEPTH (FT)	199.3	DATE START/END	4/10/06
DIAMETER OF DRILLED BOREHOLE	3.83 INCH	GROUND WATER DEPTH (STATIC WATER LEVEL DEPTH)	57.12 FT (from ground)		0.37 FT ground to casing
I.D. OF DRILLING RODS	2 INCH				

TESTED INTERVAL FROM / TO (FT)	TIME (HR:MIN:SEC)	ELAPSED TIME (Δt MIN)	DEPTH UNDER WATER (FT)	DEPTH TO WATER (FT)	CUMULATIVE RECOVERY (ΔH FT)	RECOVERY RATE (ΔH/Δt)
129-139	11:59	0	68.059	64.14	0.00	-
L= 10.0 ft	12:00	1	68.176	64.02	0.12	0.11700
	12:01	2	68.248	63.95	0.19	0.09450
	12:02	3	68.324	63.88	0.27	0.08833
	12:03	4	68.409	63.79	0.35	0.08750
	12:04	5	68.493	63.71	0.43	0.08680
	12:05	6	68.574	63.63	0.52	0.08583
	12:06	7	68.651	63.55	0.59	0.08457
	12:07	8	68.738	63.46	0.68	0.08488
	12:08	9	68.841	63.36	0.78	0.08689
	12:09	10	68.895	63.31	0.84	0.08360
	12:14	15	69.284	62.92	1.23	0.08167
	12:19	20	69.666	62.53	1.61	0.08035
	12:24	25	70.022	62.18	1.96	0.07852
	12:29	30	70.359	61.84	2.30	0.07667
	12:34	35	70.709	61.49	2.65	0.07571
	12:39	40	71.046	61.15	2.99	0.07468
	12:44	45	71.366	60.83	3.31	0.07349
	12:49	50	71.680	60.52	3.62	0.07242
	12:54	55	71.987	60.21	3.93	0.07142
	12:59	60	72.278	59.92	4.22	0.07032
	13:09	70	72.821	59.38	4.76	0.06803
	13:19	80	73.341	58.86	5.28	0.06603
	13:29	90	73.822	58.38	5.76	0.06403
	13:39	100	74.265	57.94	6.21	0.06206
	13:49	110	74.680	57.52	6.62	0.06019
	13:59	120	75.061	57.14	7.00	0.05835

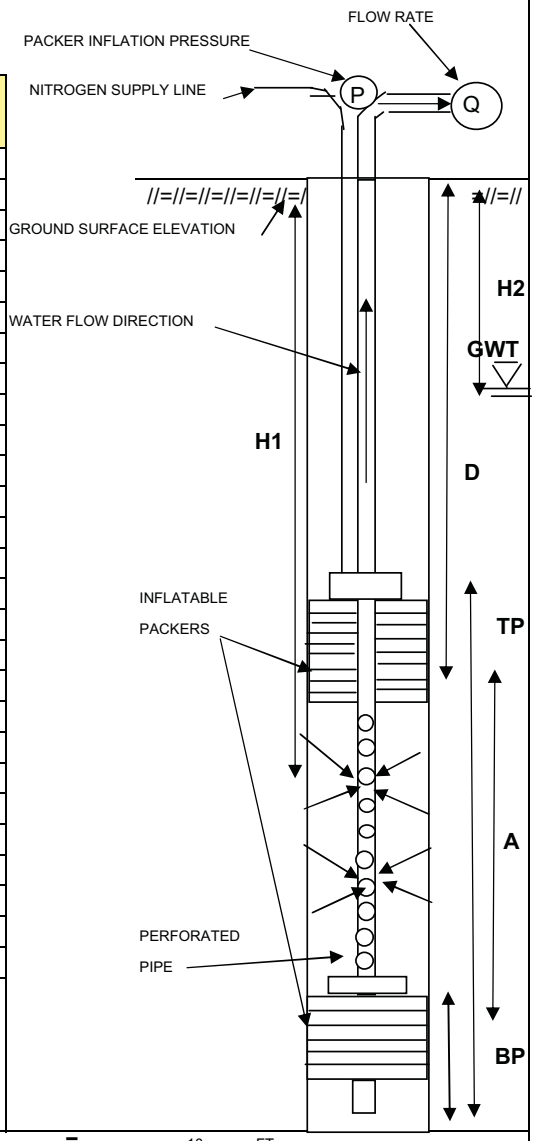

NOTES: Due to time constraints, a full recovery could not be achieved at this interval.

LEGEND:				
	A - TOTAL LENGTH OF TEST SECTION (FT)	=	10	FT
	TP - TOTAL LENGTH OF TOP PACKER AND ASSEMBLY	=	16.65	FT
	BP - TOTAL LENGTH OF BOTTOM BACKER AND ASSEMBLY	=	3.6	FT
	D - DISTANCE BETWEEN GROUND SURFACE AND TOP OF THE TEST ZONE	=	129	FT
	PIP - PACKER INFLATION PRESSURE (D PSI **+ 50 PSI**)	=	185	PSI
	H1- DISTANCE BETWEEN WATER PRESSURE GAUGE AND GROUND SURFACE	=	132.2	FT
	H2- DISTANCE BETWEEN GROUND SURFACE AND GROUND WATER TABLE	=	57.12	FT

GZA

BORING NO. /TEST NO. MW-39 T6

PACKER TEST LOG

GZA GEOENVIRONMENTAL OF NEW YORK 440 NINTH AVENUE, 18th FLOOR NEW YORK, NEW YORK 10001 SCIENTISTS AND ENGINEERS	Client Entergy Indian Point Energy Cente Buchanan, NY	BORING NO./TEST NO. MW-39 T7 SHEET 1 of 1 FILE NO. 41.0017869.01 PROJECT LOCATION Indian Point

CONTRACTOR	Aquifer Drilling & Testing, Inc.	BORING COORDINATES	N 462425.5051	E 604676.8687	
FOREMAN	Lloyd Adams	GROUND SURFACE EL.(FT)	81.864	DATUM	NGVD 29
GZA ENG.	Sara Covelli	FINAL BORING DEPTH (FT)	198.7	DATE START/END	4/10/06
DIAMETER OF DRILLED BOREHOLE	3.83 INCH	GROUND WATER DEPTH (STATIC WATER LEVEL DEPTH)	57.12 FT (from ground)		0.37 FT ground to casing
I.D. OF DRILLING RODS	2 INCH				

TESTED INTERVAL FROM / TO (FT)	TIME (HR:MIN:SEC)	ELAPSED TIME (Δt MIN)	DEPTH UNDER WATER (FT)	DEPTH TO WATER (FT)	DRAWDOWN (ΔH FT)	PUMPING RATE (gal/min)	SPECIFIC CAPACITY (gpm/ft)
119-129	15:42	0.0	65.952	56.25	56.25	0.385	0.007
L= 10.0 ft	15:43	1	65.863	56.34	56.34	0.385	0.007
	15:44	2	65.823	56.38	56.38	0.385	0.007
	15:45	3	65.800	56.40	56.40	0.385	0.007
	15:46	4	65.792	56.41	56.41	0.385	0.007
	15:47	5	65.786	56.41	56.41	0.385	0.007
	15:48	6	65.939	56.26	56.26	0.385	0.007
	15:49	7	66.004	56.20	56.20	0.385	0.007
	15:50	8	66.049	56.15	56.15	0.385	0.007
	15:51	9	66.076	56.12	56.12	0.385	0.007
	15:52	10	66.079	56.12	56.12	0.385	0.007
	15:53	11	66.105	56.10	56.10	0.385	0.007
	15:54	12	66.106	56.09	56.09	0.385	0.007
	15:55	13	66.110	56.09	56.09	0.385	0.007
	15:56	14	66.102	56.10	56.10	0.385	0.007
	15:57	15	66.110	56.09	56.09	0.385	0.007
	15:58	16	66.124	56.08	56.08	0.385	0.007
	15:59	17	66.126	56.07	56.07	0.385	0.007
	16:00	18	66.124	56.08	56.08	0.385	0.007
	16:01	19	65.970	56.23	56.23	0.385	0.007
	16:02	20	65.869	56.33	56.33	0.385	0.007
	16:03	21	65.816	56.38	56.38	0.385	0.007
	16:04	22	65.801	56.40	56.40	0.385	0.007
	16:05	23	65.786	56.41	56.41	0.385	0.007
	16:06	24	65.780	56.42	56.42	0.385	0.007
	16:07	25	65.777	56.42	56.42	0.385	0.007
	16:08	26	65.777	56.42	56.42	0.385	0.007
	16:09	27	65.770	56.43	56.43	0.385	0.007
	16:10	28	65.763	56.44	56.44	0.385	0.007
	16:11	29	65.763	56.44	56.44	0.385	0.007

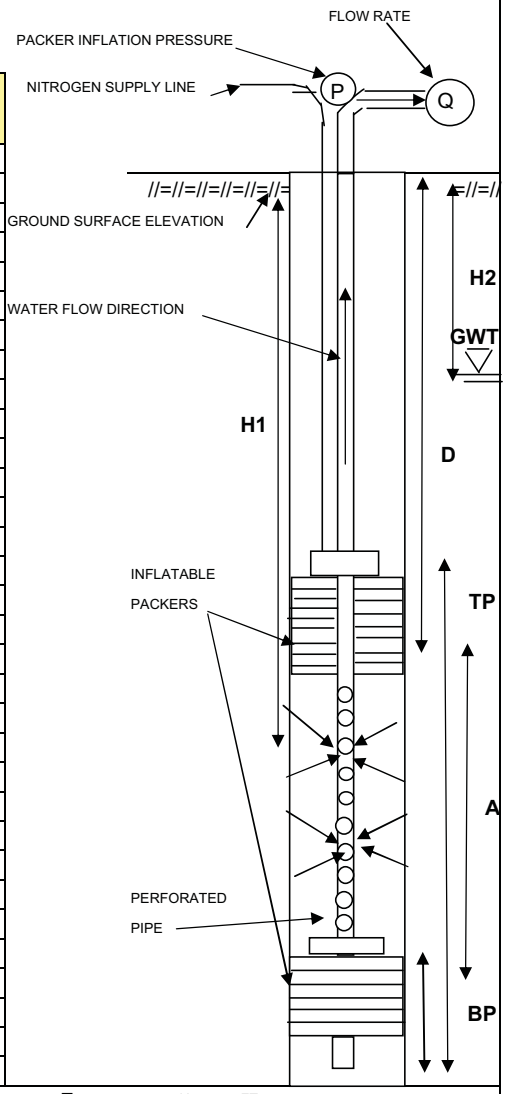

LEGEND:			
A - TOTAL LENGTH OF TEST SECTION (FT)	=	10	FT
TP - TOTAL LENGTH OF TOP PACKER AND ASSEMBLY	=	16.65	FT
BP - TOTAL LENGTH OF BOTTOM BACKER AND ASSEMBLY	=	3.6	FT
D - DISTANCE BETWEEN GROUND SURFACE AND TOP OF THE TEST ZONE	=	119	FT
PIP - PACKER INFLATION PRESSURE (D PSI + **50 PSI**)	=	185	PSI
H1- DISTANCE BETWEEN WATER PRESSURE GAUGE AND GROUND SURFACE	=	122.2	FT
H2- DISTANCE BETWEEN GROUND SURFACE AND GROUND WATER TABLE	=	57.12	FT

GZA

BORING NO. /TEST NO. MW-39 T7

PACKER TEST LOG

GZA GEOENVIRONMENTAL OF NEW YORK 440 NINTH AVENUE, 18th FLOOR NEW YORK, NEW YORK 10001 SCIENTISTS AND ENGINEERS	Client Entergy Indian Point Energy Cente Buchanan, NY	BORING NO./TEST NO. MW-39 T8 SHEET 1 of 1 FILE NO. 41.0017869.01 PROJECT LOCATION Indian Point

CONTRACTOR	Aquifer Drilling & Testing, Inc.	BORING COORDINATES	N 462425.5051 E 604676.8687
FOREMAN	Lloyd Adams	GROUND SURFACE EL.(FT)	81.864 DATUM NGVD 29
GZA ENG.	Sara Covelli	FINAL BORING DEPTH (FT)	199.3 DATE START/END 4/11/06
DIAMETER OF DRILLED BOREHOLE	3.83 INCH	GROUND WATER DEPTH (STATIC WATER LEVEL DEPTH)	52.5 FT (from ground) 0.37 FT ground to casing
I.D. OF DRILLING RODS	2 INCH		

TESTED INTERVAL FROM / TO (FT)	TIME (HR:MIN:SEC)	ELAPSED TIME (Δt MIN)	DEPTH UNDER WATER (FT)	DEPTH TO WATER (FT)	DRAWDOWN (ΔH FT)	PUMPING RATE (gal/min)	SPECIFIC CAPACITY (gpm/ft)
99.5-109.5	8:45	0	48.957	53.74	1.243	1.440	1.158
L= 10.0 ft	8:46	1	48.936	53.76	1.264	1.440	1.139
	8:47	2	48.909	53.79	1.291	1.440	1.115
	8:48	3	48.889	53.81	1.311	1.440	1.098
	8:49	4	48.867	53.83	1.333	1.440	1.080
	8:50	5	48.851	53.85	1.349	1.440	1.067
	8:51	6	48.836	53.86	1.364	1.440	1.056
	8:52	7	48.814	53.89	1.386	1.440	1.039
	8:53	8	48.797	53.90	1.403	1.440	1.026
	8:54	9	48.787	53.91	1.413	1.440	1.019
	8:55	10	48.765	53.94	1.435	1.440	1.003
	8:56	11	48.749	53.95	1.451	1.440	0.992
	8:57	12	48.749	53.95	1.451	1.440	0.992
	8:58	13	48.732	53.97	1.468	1.440	0.981

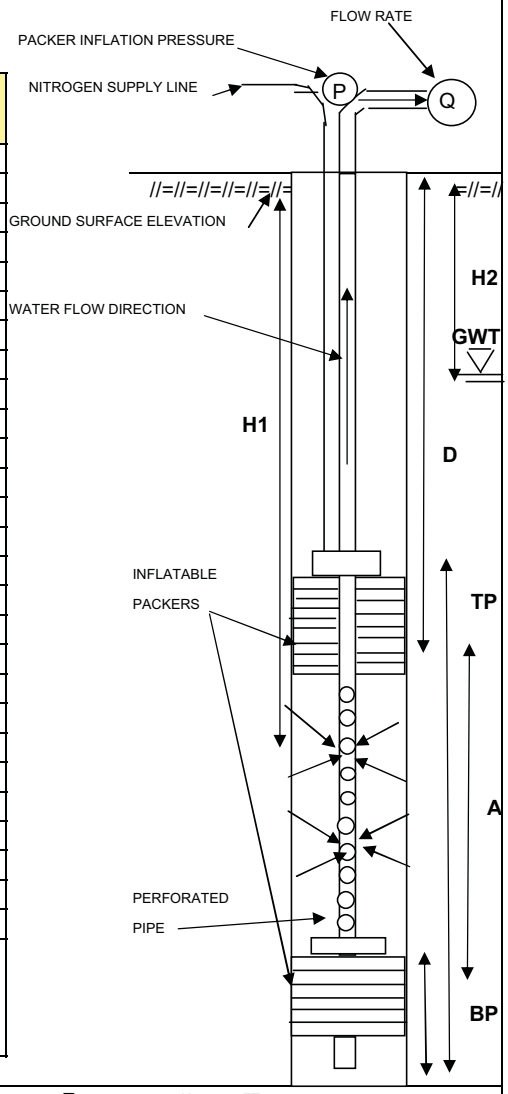

LEGEND:				
	A - TOTAL LENGTH OF TEST SECTION (FT)	=	10	FT
	TP - TOTAL LENGTH OF TOP PACKER AND ASSEMBLY	=	16.65	FT
	BP - TOTAL LENGTH OF BOTTOM BACKER AND ASSEMBLY	=	3.6	FT
	D - DISTANCE BETWEEN GROUND SURFACE AND TOP OF THE TEST ZONE	=	99.5	FT
	PIP - PACKER INFLATION PRESSURE (D PSI + **50 PSI**)	=	185	PSI
	H1- DISTANCE BETWEEN WATER PRESSURE GAUGE AND GROUND SURFACE	=	102.7	FT
	H2- DISTANCE BETWEEN GROUND SURFACE AND GROUND WATER TABLE	=	57.12	FT

GZA

BORING NO. /TEST NO. MW-39 T8

PACKER TEST LOG

GZA GEOENVIRONMENTAL OF NEW YORK 440 NINTH AVENUE, 18th FLOOR NEW YORK, NEW YORK 10001 SCIENTISTS AND ENGINEERS	Client Entergy Indian Point Energy Cente Buchanan, NY	BORING NO./TEST NO.	MW-39 T9
		SHEET	1 of 1
		FILE NO.	41.0017869.01
		PROJECT LOCATION	Indian Point

CONTRACTOR	Aquifer Drilling & Testing, Inc.	BORING COORDINATES	N 462425.5051	E 604676.8687	
FOREMAN	Lloyd Adams	GROUND SURFACE EL.(FT)	81.864	DATUM	NGVD 29
GZA ENG.	Sara Covelli	FINAL BORING DEPTH (FT)	199.3	DATE START/END	4/13/06
DIAMETER OF DRILLED BOREHOLE	3.83 INCH	GROUND WATER DEPTH (STATIC WATER LEVEL DEPTH)	57.12 FT	FT (from ground)	0.37 FT ground to casing
I.D. OF DRILLING RODS	2 INCH				

TESTED INTERVAL FROM / TO (FT)	TIME (HR:MIN:SEC)	ELAPSED TIME (Δt MIN)	DEPTH UNDER WATER (FT)	DEPTH TO WATER (FT)	CUMULATIVE RECOVERY (ΔH FT)	RECOVERY RATE (ΔH/Δt)
89.3-99.3	14:43:30	0.0	16.635	75.87	0.00	-
L= 10.0 ft	14:44:00	0.5	17.810	74.69	1.18	2.35000
	14:44:30	1.0	18.933	73.57	2.30	2.29800
	14:45:00	1.5	19.994	72.51	3.36	2.23933
	14:45:30	2.0	21.018	71.48	4.38	2.19150
	14:46:00	2.5	21.992	70.51	5.36	2.14280
	14:46:30	3.0	22.920	69.58	6.29	2.09500
	14:47:00	3.5	23.814	68.69	7.18	2.05114
	14:47:30	4.0	24.661	67.84	8.03	2.00650
	14:48:00	4.5	25.463	67.04	8.83	1.96178
	14:48:30	5.0	26.206	66.29	9.57	1.91420
	14:49:00	5.5	26.937	65.56	10.30	1.87309
	14:49:30	6.0	27.632	64.87	11.00	1.83283
	14:50:00	6.5	28.293	64.21	11.66	1.79354
	14:50:30	7.0	28.912	63.59	12.28	1.75386
	14:51:00	8.0	29.504	63.00	12.87	1.60863
	14:52:00	9.0	30.586	61.91	13.95	1.55011
	14:53:00	10.0	31.547	60.95	14.91	1.49120
	14:54:00	11.0	32.397	60.10	15.76	1.43291
	14:55:00	12.0	33.139	59.36	16.50	1.37533
	14:56:00	13.0	33.768	58.73	17.13	1.31792
	14:57:00	14.0	34.305	58.20	17.67	1.26214
	14:58:00	15.0	34.765	57.74	18.13	1.20867
	14:59:00	16.0	35.152	57.35	18.52	1.15731
	15:00:00	17.0	35.460	57.04	18.83	1.10735
	15:02:00	19.0	35.896	56.60	19.26	1.01374
	15:04:00	21.0	36.142	56.36	19.51	0.92890

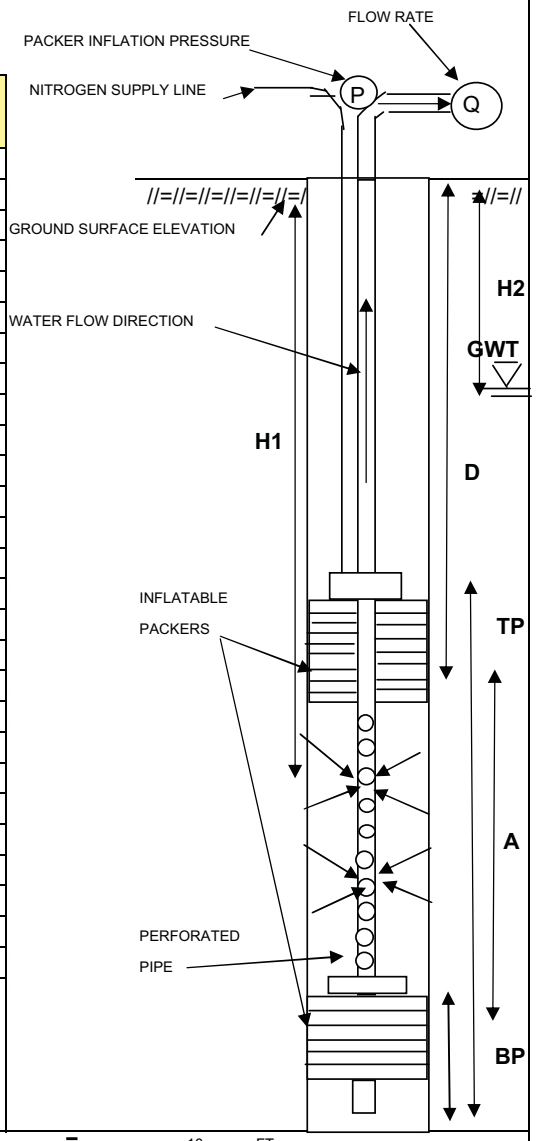

LEGEND:				
	A - TOTAL LENGTH OF TEST SECTION (FT)	=	10	FT
	TP - TOTAL LENGTH OF TOP PACKER AND ASSEMBLY	=	16.65	FT
	BP - TOTAL LENGTH OF BOTTOM BACKER AND ASSEMBLY	=	3.6	FT
	D - DISTANCE BETWEEN GROUND SURFACE AND TOP OF THE TEST ZONE	=	89.3	FT
	PIP - PACKER INFLATION PRESSURE (D PSI **+ 50 PSI**)	=	185	PSI
	H1- DISTANCE BETWEEN WATER PRESSURE GAUGE AND GROUND SURFACE	=	92.5	FT
	H2- DISTANCE BETWEEN GROUND SURFACE AND GROUND WATER TABLE	=	57.12	FT

GZA

BORING NO. /TEST NO. MW-39 T9

PACKER TEST LOG

GZA GEOENVIRONMENTAL OF NEW YORK 440 NINTH AVENUE, 18th FLOOR NEW YORK, NEW YORK 10001 SCIENTISTS AND ENGINEERS	Client Entergy Indian Point Energy Cente Buchanan, NY	BORING NO./TEST NO. MW-39 T10 SHEET 1 of 1 FILE NO. 41.0017869.01 PROJECT LOCATION Indian Point

CONTRACTOR	Aquifer Drilling & Testing, Inc.	BORING COORDINATES	N 462425.5051	E 604676.8687	
FOREMAN	Lloyd Adams	GROUND SURFACE EL.(FT)	81.864	DATUM	NGVD 29
GZA ENG.	Sara Covelli	FINAL BORING DEPTH (FT)	199.3	DATE START/END	4/19/06
DIAMETER OF DRILLED BOREHOLE	3.83 INCH	GROUND WATER DEPTH (STATIC WATER LEVEL DEPTH)	57.79 FT	FT (from ground)	0.37 FT ground to casing
I.D. OF DRILLING RODS	2 INCH				

TESTED INTERVAL FROM / TO (FT)	TIME (HR:MIN:SEC)	ELAPSED TIME (Δt MIN)	DEPTH UNDER WATER (FT)	DEPTH TO WATER (FT)	CUMULATIVE RECOVERY (ΔH FT)	RECOVERY RATE (ΔH/Δt)
79.5-89.5	9:22:30	0.0	12.192	70.51	0.00	-
L= 10.0 ft	9:23:00	0.5	16.567	66.13	4.38	8.75000
	9:23:30	1.0	18.926	63.77	6.73	6.73400
	9:24:00	1.5	20.885	61.82	8.69	5.79533
	9:24:30	2.0	22.479	60.22	10.29	5.14350
	9:25:00	2.5	23.724	58.98	11.53	4.61280
	9:25:30	3.0	24.672	58.03	12.48	4.16000
	9:26:00	3.5	25.356	57.34	13.16	3.76114
	9:26:30	4.0	25.823	56.88	13.63	3.40775
	9:27:00	4.5	26.085	56.62	13.89	3.08733
	9:27:30	5.0	26.273	56.43	14.08	2.81620
	9:28:00	5.5	26.380	56.32	14.19	2.57964
	9:28:30	6.0	26.452	56.25	14.26	2.37667
	9:29:00	6.5	26.485	56.22	14.29	2.19892
	9:29:30	7.0	26.514	56.19	14.32	2.04600
	9:30:00	7.5	26.526	56.17	14.33	1.91120
	9:30:30	8.0	26.532	56.17	14.34	1.79250
	9:31:00	8.5	26.550	56.15	14.36	1.68918
	9:31:30	9.0	26.556	56.14	14.36	1.59600
	9:32:00	9.5	26.561	56.14	14.37	1.51253
	9:32:30	10.0	26.567	56.13	14.38	1.43750
	9:33:00	10.5	26.568	56.13	14.38	1.36914
	9:33:30	11.0	26.574	56.13	14.38	1.30745

* A constant head test was also run at this interval.

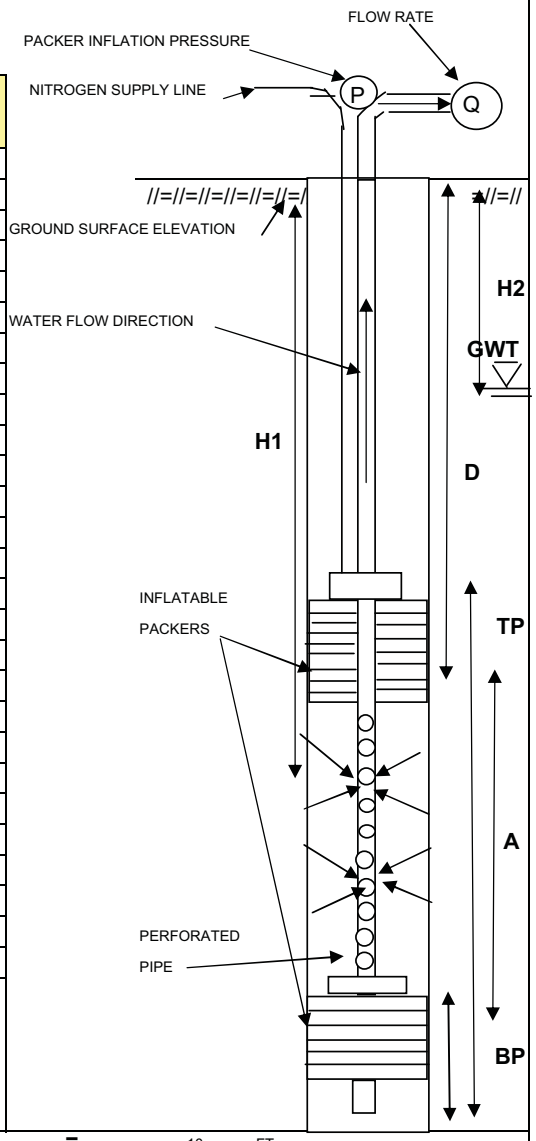

LEGEND:				
A - TOTAL LENGTH OF TEST SECTION (FT)	=	10	FT
TP - TOTAL LENGTH OF TOP PACKER AND ASSEMBLY	=	16.65	FT
BP - TOTAL LENGTH OF BOTTOM BACKER AND ASSEMBLY	=	3.6	FT
D - DISTANCE BETWEEN GROUND SURFACE AND TOP OF THE TEST ZONE	=	79.5	FT
PIP - PACKER INFLATION PRESSURE (D PSI **+ 50 PSI**)	=	185	PSI
H1- DISTANCE BETWEEN WATER PRESSURE GAUGE AND GROUND SURFACE	=	82.7	FT
H2- DISTANCE BETWEEN GROUND SURFACE AND GROUND WATER TABLE	=	57.12	FT

GZA

BORING NO. /TEST NO. MW-39 T10

PACKER TEST LOG

GZA GEOENVIRONMENTAL OF NEW YORK 440 NINTH AVENUE, 18th FLOOR NEW YORK, NEW YORK 10001 SCIENTISTS AND ENGINEERS	Client Entergy Indian Point Energy Cente Buchanan, NY	BORING NO./TEST NO. MW-39 T10 SHEET 1 of 1 FILE NO. 41.0017869.01 PROJECT LOCATION Indian Point

CONTRACTOR	Aquifer Drilling & Testing, Inc.	BORING COORDINATES	N 462425.5051 E 604676.8687
FOREMAN	Lloyd Adams	GROUND SURFACE EL.(FT)	81.864 DATUM NGVD 29
GZA ENG.	Sara Covelli	FINAL BORING DEPTH (FT)	199.3 DATE START/END 4/19/06
DIAMETER OF DRILLED BOREHOLE	3.83 INCH	GROUND WATER DEPTH (STATIC WATER LEVEL DEPTH)	57.79 FT (from ground) 0.37 FT ground to casing
I.D. OF DRILLING RODS	2 INCH		

TESTED INTERVAL FROM / TO (FT)	TIME (HR:MIN:SEC)	ELAPSED TIME (Δt MIN)	DEPTH UNDER WATER (FT)	DEPTH TO WATER (FT)	DRAWDOWN (ΔH FT)	PUMPING RATE (gal/min)	SPECIFIC CAPACITY (gpm/ft)
79.5-89.5	9:39	0	22.718	59.98	2.192	0.440	0.201
L= 10.0 ft	9:40	1	22.742	59.96	2.168	0.440	0.203
	9:41	2	22.735	59.97	2.175	0.440	0.202
	9:42	3	22.720	59.98	2.19	0.440	0.201
	9:43	4	22.741	59.96	2.169	0.440	0.203
	9:44	5	22.741	59.96	2.169	0.440	0.203
	9:45	6	22.741	59.96	2.169	0.440	0.203
	9:46	7	22.735	59.97	2.175	0.440	0.202
	9:47	8	22.735	59.97	2.175	0.440	0.202
	9:48	9	22.731	59.97	2.179	0.440	0.202
	9:49	10	22.726	59.97	2.184	0.440	0.201
	9:50	11	22.727	59.97	2.183	0.440	0.202
	9:51	12	22.702	60.00	2.208	0.440	0.199
	9:52	13	22.686	60.01	2.224	0.440	0.198
	9:53	14	22.701	60.00	2.209	0.440	0.199
	9:54	15	22.701	60.00	2.209	0.440	0.199
	9:55	16	22.685	60.02	2.225	0.440	0.198
	9:56	17	22.690	60.01	2.22	0.440	0.198
	9:57	18	22.675	60.03	2.235	0.440	0.197

* A recovery test was also run at this interval.

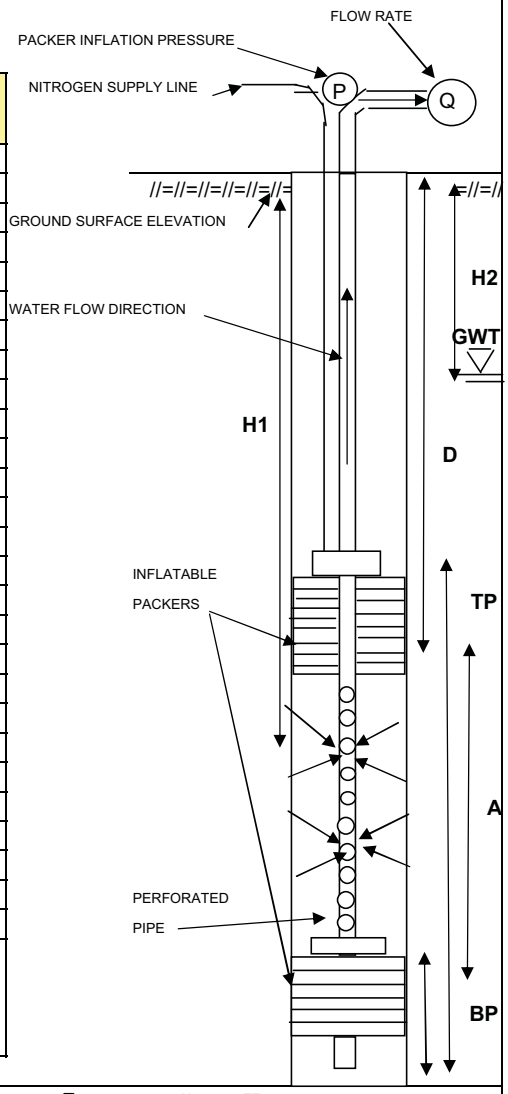

LEGEND:				
	A - TOTAL LENGTH OF TEST SECTION (FT)	=	10	FT
	TP - TOTAL LENGTH OF TOP PACKER AND ASSEMBLY	=	16.65	FT
	BP - TOTAL LENGTH OF BOTTOM BACKER AND ASSEMBLY	=	3.6	FT
	D - DISTANCE BETWEEN GROUND SURFACE AND TOP OF THE TEST ZONE	=	79.5	FT
	PIP - PACKER INFLATION PRESSURE (D PSI + **50 PSI**)	=	185	PSI
	H1- DISTANCE BETWEEN WATER PRESSURE GAUGE AND GROUND SURFACE	=	82.7	FT
	H2- DISTANCE BETWEEN GROUND SURFACE AND GROUND WATER TABLE	=	57.12	FT

GZA

BORING NO. /TEST NO. MW-39 T10

PACKER TEST LOG

GZA GEOENVIRONMENTAL OF NEW YORK 440 NINTH AVENUE, 18th FLOOR NEW YORK, NEW YORK 10001 SCIENTISTS AND ENGINEERS	Client Entergy Indian Point Energy Cente Buchanan, NY	BORING NO./TEST NO.	MW-39 T11
		SHEET	1 of 1
		FILE NO.	41.0017869.01
		PROJECT LOCATION	Indian Point

CONTRACTOR	Aquifer Drilling & Testing, Inc.	BORING COORDINATES	N 462425.5051	E 604676.8687	
FOREMAN	Lloyd Adams	GROUND SURFACE EL.(FT)	81.864	DATUM	NGVD 29
GZA ENG.	Sara Covelli	FINAL BORING DEPTH (FT)	199.3	DATE START/END	4/19/06
DIAMETER OF DRILLED BOREHOLE	3.83 INCH	GROUND WATER DEPTH (STATIC WATER LEVEL DEPTH)	57.79 FT	FT (from ground)	0.37 FT ground to casing
I.D. OF DRILLING RODS	2 INCH				

TESTED INTERVAL FROM / TO (FT)	TIME (HR:MIN:SEC)	ELAPSED TIME (Δt MIN)	DEPTH UNDER WATER (FT)	DEPTH TO WATER (FT)	CUMULATIVE RECOVERY (ΔH FT)	RECOVERY RATE (ΔH/Δt)
69.5-79.5	11:18	0.0	7.167	65.53	0.00	-
L= 10.0 ft	11:19	1.0	8.770	63.93	1.60	1.60300
	11:20	2.0	10.066	62.63	2.90	1.44950
	11:21	3.0	11.184	61.52	4.02	1.33900
	11:22	4.0	12.140	60.56	4.97	1.24325
	11:23	5.0	12.937	59.76	5.77	1.15400
	11:24	6.0	13.602	59.10	6.44	1.07250
	11:25	7.0	14.164	58.54	7.00	0.99957
	11:26	8.0	14.621	58.08	7.45	0.93175
	11:27	9.0	15.004	57.70	7.84	0.87078
	11:28	10.0	15.302	57.40	8.14	0.81350
	11:29	11.0	15.547	57.15	8.38	0.76182
	11:30	12.0	15.739	56.96	8.57	0.71433
	11:31	13.0	15.884	56.82	8.72	0.67054
	11:32	14.0	15.937	56.76	8.77	0.62643
	11:33	15.0	15.993	56.71	8.83	0.58840
	11:34	16.0	16.053	56.65	8.89	0.55538
	11:35	17.0	16.097	56.60	8.93	0.52529
	11:36	18.0	16.141	56.56	8.97	0.49856
	11:37	19.0	16.175	56.53	9.01	0.47411
	11:38	20.0	16.213	56.49	9.05	0.45230
	11:39	21.0	16.241	56.46	9.07	0.43210
	11:40	22.0	16.264	56.44	9.10	0.41350
	11:41	23.0	16.286	56.41	9.12	0.39648
	11:42	24.0	16.303	56.40	9.14	0.38067
	11:43	25.0	16.320	56.38	9.15	0.36612
	11:44	26.0	16.331	56.37	9.16	0.35246

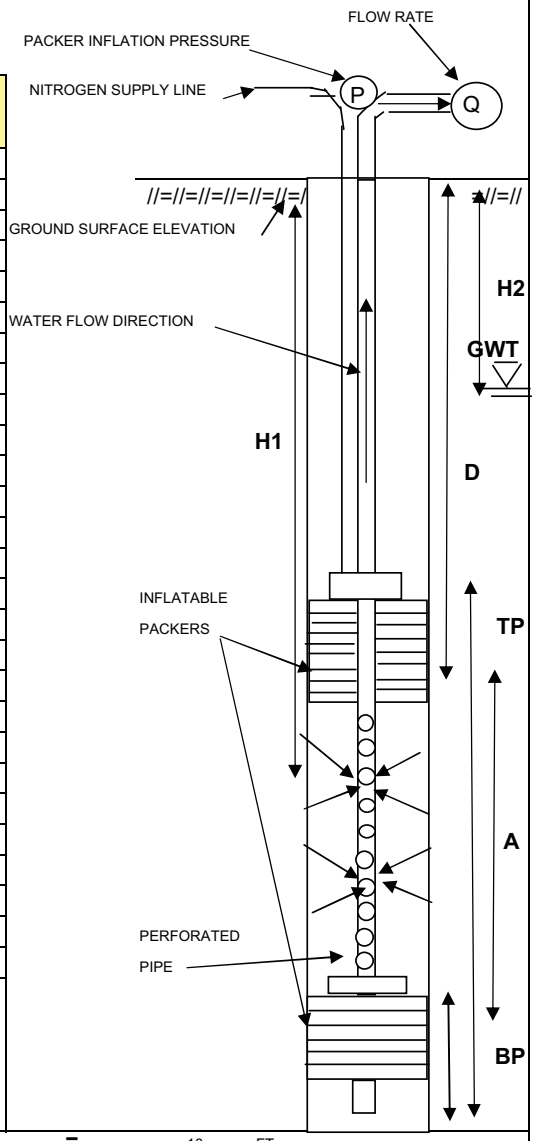

LEGEND:				
	A - TOTAL LENGTH OF TEST SECTION (FT)	=	10	FT
	TP - TOTAL LENGTH OF TOP PACKER AND ASSEMBLY	=	16.65	FT
	BP - TOTAL LENGTH OF BOTTOM BACKER AND ASSEMBLY	=	3.6	FT
	D - DISTANCE BETWEEN GROUND SURFACE AND TOP OF THE TEST ZONE	=	69.5	FT
	PIP - PACKER INFLATION PRESSURE (D PSI **+ 50 PSI**)	=	185	PSI
	H1- DISTANCE BETWEEN WATER PRESSURE GAUGE AND GROUND SURFACE	=	72.7	FT
	H2- DISTANCE BETWEEN GROUND SURFACE AND GROUND WATER TABLE	=	57.12	FT

GZA

BORING NO. /TEST NO. MW-39 T11

PACKER TEST LOG

GZA GEOENVIRONMENTAL OF NEW YORK 440 NINTH AVENUE, 18th FLOOR NEW YORK, NEW YORK 10001 SCIENTISTS AND ENGINEERS	Client Entergy Indian Point Energy Cente Buchanan, NY	BORING NO./TEST NO. MW-39 T12 SHEET 1 of 1 FILE NO. 41.0017869.01 PROJECT LOCATION Indian Point

CONTRACTOR	Aquifer Drilling & Testing, Inc.	BORING COORDINATES	N 462425.5051	E 604676.8687	
FOREMAN	Lloyd Adams	GROUND SURFACE EL.(FT)	81.864	DATUM	NGVD 29
GZA ENG.	Sara Covelli	FINAL BORING DEPTH (FT)	199.3	DATE START/END	4/19/06
DIAMETER OF DRILLED BOREHOLE	3.83 INCH	GROUND WATER DEPTH (STATIC WATER LEVEL DEPTH)	57.79 FT (from ground)		0.37 FT ground to casing
I.D. OF DRILLING RODS	2 INCH				

TESTED INTERVAL FROM / TO (FT)	TIME (HR:MIN:SEC)	ELAPSED TIME (Δt MIN)	DEPTH UNDER WATER (FT)	DEPTH TO WATER (FT)	DRAWDOWN (ΔH FT)	PUMPING RATE (gal/min)	SPECIFIC CAPACITY (gpm/ft)
59.2-69.2	12:35	0	2.988	59.41	1.622	2.586	1.594
L= 10.0 ft	12:36	1	2.988	59.41	1.622	2.586	1.594
	12:37	2	2.972	59.43	1.638	2.586	1.579
	12:38	3	2.977	59.42	1.633	2.586	1.584
	12:39	4	2.961	59.44	1.649	2.586	1.568
	12:40	5	2.934	59.47	1.676	2.586	1.543
	12:41	6	2.940	59.46	1.67	2.586	1.549
	12:42	7	2.929	59.47	1.681	2.586	1.538
	12:43	8	2.950	59.45	1.66	2.586	1.558
	12:44	9	2.940	59.46	1.67	2.586	1.549
	12:45	10	2.934	59.47	1.676	2.586	1.543
	12:46	11	2.915	59.49	1.695	2.586	1.526
	12:47	12	2.910	59.49	1.7	2.586	1.521
	12:48	13	2.937	59.46	1.673	2.586	1.546
	12:49	14	2.914	59.49	1.696	2.400	1.415
	12:50	15	2.903	59.50	1.707	2.400	1.406
	12:51	16	2.882	59.52	1.728	2.400	1.389

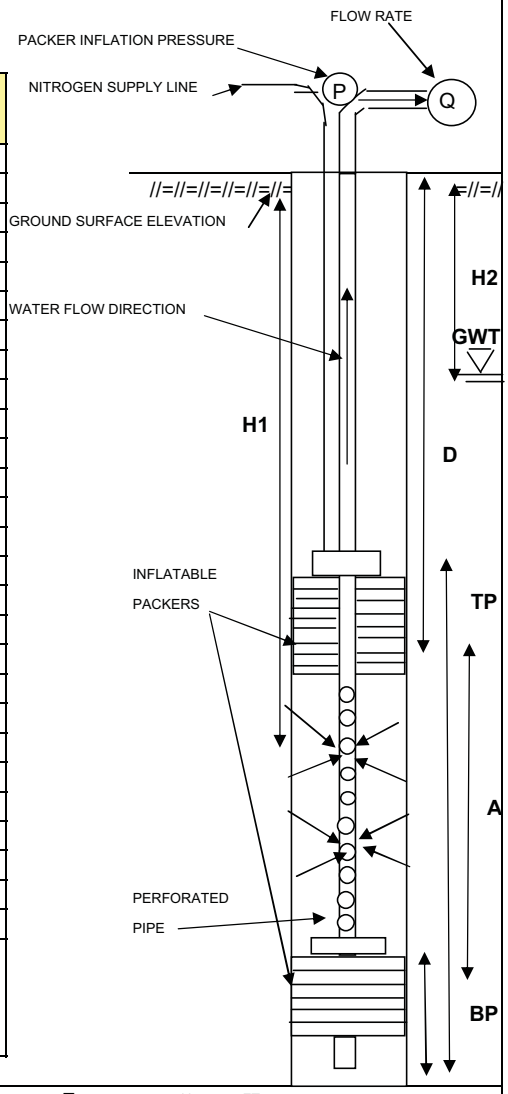

LEGEND:				
A - TOTAL LENGTH OF TEST SECTION (FT)	=	10	FT
TP - TOTAL LENGTH OF TOP PACKER AND ASSEMBLY	=	16.65	FT
BP - TOTAL LENGTH OF BOTTOM BACKER AND ASSEMBLY	=	3.6	FT
D - DISTANCE BETWEEN GROUND SURFACE AND TOP OF THE TEST ZONE	=	59.2	FT
PIP - PACKER INFLATION PRESSURE (D PSI + **50 PSI**)	=	185	PSI
H1- DISTANCE BETWEEN WATER PRESSURE GAUGE AND GROUND SURFACE	=	62.4	FT
H2- DISTANCE BETWEEN GROUND SURFACE AND GROUND WATER TABLE	=	57.12	FT

GZA

BORING NO. /TEST NO. MW-39 T12

PACKER TEST LOG

GZA GEOENVIRONMENTAL OF NEW YORK 440 NINTH AVENUE, 18th FLOOR NEW YORK, NEW YORK 10001 SCIENTISTS AND ENGINEERS	Client Entergy Indian Point Energy Cente Buchanan, NY	BORING NO./TEST NO.	MW-40 T1
		SHEET	1 of 1
		FILE NO.	41.0017869.01
		PROJECT LOCATION	Indian Point

CONTRACTOR	Aquifer Drilling & Testing, Inc.	BORING COORDINATES	N 461950.5094	E 603899.3458	
FOREMAN	Lloyd Adams	GROUND SURFACE EL.(FT)	74.987	DATUM	NGVD 29
GZA ENG.	Sara Covelli	FINAL BORING DEPTH (FT)	193	DATE START/END	5/10/06
DIAMETER OF DRILLED BOREHOLE	3.83 INCH	GROUND WATER DEPTH (STATIC WATER LEVEL DEPTH)	16.07	(from ground)	0.25 FT ground to casing
I.D. OF DRILLING RODS	2 INCH				

TESTED INTERVAL FROM / TO (FT)	TIME (HR:MIN:SEC)	ELAPSED TIME (Δt MIN)	DEPTH UNDER WATER (FT)	DEPTH TO WATER (FT)	CUMULATIVE RECOVERY (ΔH FT)	RECOVERY RATE (ΔH/Δt)
178-188 ft	11:56	0	153.499	35.70	0.00	-
L= 10.0 ft	11:57	1	153.787	35.41	0.29	0.28800
	11:58	2	154.003	35.20	0.50	0.25200
	11:59	3	154.223	34.98	0.72	0.24133
	12:00	4	154.477	34.72	0.98	0.24450
	12:01	5	154.765	34.44	1.27	0.25320
	12:06	10	155.786	33.41	2.29	0.22870
	12:11	15	156.074	33.13	2.58	0.17167
	12:16	20	156.347	32.85	2.85	0.14240
	12:21	25	156.578	32.62	3.08	0.12316
	12:26	30	156.808	32.39	3.31	0.11030
	12:31	35	156.995	32.21	3.50	0.09989
	12:36	40	157.254	31.95	3.76	0.09387
	12:41	45	157.412	31.79	3.91	0.08696
	12:46	50	157.613	31.59	4.11	0.08228
	12:51	55	157.815	31.39	4.32	0.07847
	12:56	60	157.987	31.21	4.49	0.07480
	13:01	65	158.189	31.01	4.69	0.07215
	13:06	70	158.333	30.87	4.83	0.06906
	13:11	75	158.491	30.71	4.99	0.06656
	13:16	80	158.663	30.54	5.16	0.06455
	13:21	85	158.822	30.38	5.32	0.06262
	13:26	90	158.937	30.26	5.44	0.06042
	13:31	95	159.109	30.09	5.61	0.05905
	13:36	100	159.253	29.95	5.75	0.05754
	13:41	105	159.383	29.82	5.88	0.05604
	13:46	110	159.527	29.67	6.03	0.05480
	13:51	115	159.642	29.56	6.14	0.05342
	13:56	120	159.915	29.29	6.42	0.05347

NOTE: Due to time constraints, a full recovery could not be achieved at this interval.

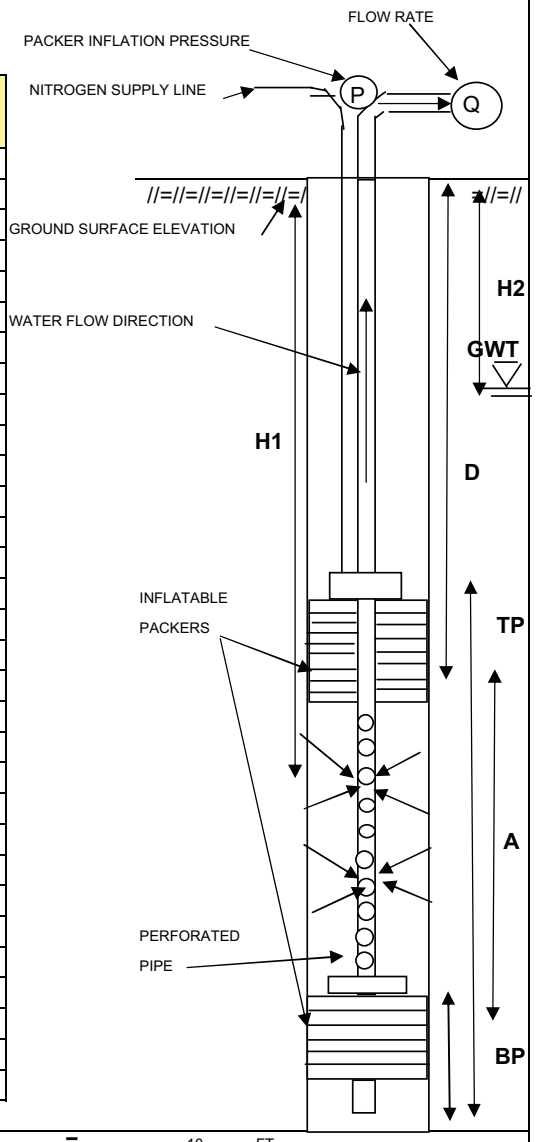

LEGEND:				
	A - TOTAL LENGTH OF TEST SECTION (FT)	=	10	FT
	TP - TOTAL LENGTH OF TOP PACKER AND ASSEMBLY	=	16.85	FT
	BP - TOTAL LENGTH OF BOTTOM PACKER AND ASSEMBLY	=	3.5	FT
	D - DISTANCE BETWEEN GROUND SURFACE AND TOP OF THE TEST ZONE	=	178	FT
	PIP - PACKER INFLATION PRESSURE (D PSI **+ 50 PSI**)	=	185	PSI
	H1- DISTANCE BETWEEN WATER PRESSURE GAUGE AND GROUND SURFACE	=	189.2	FT
	H2- DISTANCE BETWEEN GROUND SURFACE AND GROUND WATER TABLE	=	16.07	FT
	Q = VOL/TIME = (ΔH/Δt) * CONV FACTOR (0.653 GAL/FT)	=		GAL/MIN

GZA

BORING NO. /TEST NO. MW-40 T1

PACKER TEST LOG

GZA GEOENVIRONMENTAL OF NEW YORK 440 NINTH AVENUE, 18th FLOOR NEW YORK, NEW YORK 10001 SCIENTISTS AND ENGINEERS	Client Entergy Indian Point Energy Cente Buchanan, NY	BORING NO./TEST NO.	MW-40 T2
		SHEET	1 of 1
		FILE NO.	41.0017869.01
		PROJECT LOCATION	Indian Point

CONTRACTOR	Aquifer Drilling & Testing, Inc.	BORING COORDINATES	N 461950.5094	E 603899.3458	
FOREMAN	Lloyd Adams	GROUND SURFACE EL.(FT)	74.987	DATUM	NGVD 29
GZA ENG.	Sara Covelli	FINAL BORING DEPTH (FT)	193	DATE START/END	5/10/06
DIAMETER OF DRILLED BOREHOLE	3.83 INCH	GROUND WATER DEPTH (STATIC WATER LEVEL DEPTH)	16.11	(from ground)	0.25 FT ground to casing
I.D. OF DRILLING RODS	2 INCH				

TESTED INTERVAL FROM / TO (FT)	TIME (HR:MIN:SEC)	ELAPSED TIME (Δt MIN)	DEPTH UNDER WATER (FT)	DEPTH TO WATER (FT)	CUMULATIVE RECOVERY (ΔH FT)	RECOVERY RATE (ΔH/Δt)
160-170	15:09	0	143.706	27.49	0.00	-
L= 10.0 ft	15:10	1	144.152	27.05	0.45	0.44600
	15:11	2	144.569	26.63	0.86	0.43150
	15:12	3	144.900	26.30	1.19	0.39800
	15:13	4	145.216	25.98	1.51	0.37750
	15:14	5	145.561	25.64	1.86	0.37100
	15:15	6	145.921	25.28	2.22	0.36917
	15:16	7	146.323	24.88	2.62	0.37386
	15:17	8	146.568	24.63	2.86	0.35775
	15:18	9	146.711	24.49	3.01	0.33389
	15:19	10	146.783	24.42	3.08	0.30770
	15:24	15	147.085	24.12	3.38	0.22527
	15:29	20	147.215	23.99	3.51	0.17545
	15:34	25	147.315	23.89	3.61	0.14436
	15:39	30	147.387	23.81	3.68	0.12270
	15:44	35	147.502	23.70	3.80	0.10846
	15:49	40	147.574	23.63	3.87	0.09670
	15:54	45	147.646	23.55	3.94	0.08756
	15:59	50	147.718	23.48	4.01	0.08024
	16:04	55	147.776	23.42	4.07	0.07400
	16:09	60	147.847	23.35	4.14	0.06902
	16:14	65	147.934	23.27	4.23	0.06505
	16:19	70	147.962	23.24	4.26	0.06080

NOTE: Due to time constraints, a full recovery could not be achieved at this interval.

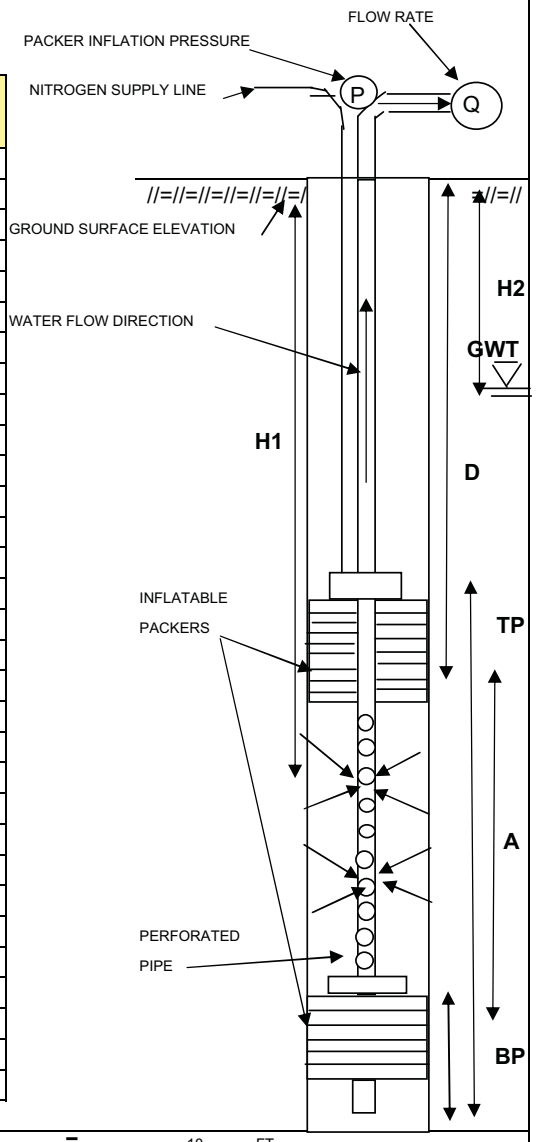

LEGEND:				
	A - TOTAL LENGTH OF TEST SECTION (FT)	=	10	FT
	TP - TOTAL LENGTH OF TOP PACKER AND ASSEMBLY	=	16.85	FT
	BP - TOTAL LENGTH OF BOTTOM PACKER AND ASSEMBLY	=	3.5	FT
	D - DISTANCE BETWEEN GROUND SURFACE AND TOP OF THE TEST ZONE	=	160	FT
	PIP - PACKER INFLATION PRESSURE (D PSI **+ 50 PSI**)	=	185	PSI
	H1- DISTANCE BETWEEN WATER PRESSURE GAUGE AND GROUND SURFACE	=	171.2	FT
	H2- DISTANCE BETWEEN GROUND SURFACE AND GROUND WATER TABLE	=	16.11	FT
	Q = VOL/TIME = (ΔH/Δt) * CONV FACTOR (0.653 GAL/FT)	=		GAL/MIN

GZA

BORING NO. /TEST NO. MW-40 T2

PACKER TEST LOG

GZA GEOENVIRONMENTAL OF NEW YORK 440 NINTH AVENUE, 18th FLOOR NEW YORK, NEW YORK 10001 SCIENTISTS AND ENGINEERS	Client Entergy Indian Point Energy Cente Buchanan, NY	BORING NO./TEST NO.	MW-40 T3
		SHEET	1 of 1
		FILE NO.	41.0017869.01
		PROJECT LOCATION	Indian Point

CONTRACTOR	Aquifer Drilling & Testing, Inc.	BORING COORDINATES	N 461950.5094	E 603899.3458	
FOREMAN	Lloyd Adams	GROUND SURFACE EL.(FT)	74.987	DATUM	NGVD 29
GZA ENG.	Sara Covelli	FINAL BORING DEPTH (FT)	193	DATE START/END	5/11/06
DIAMETER OF DRILLED BOREHOLE	3.83 INCH	GROUND WATER DEPTH (STATIC WATER LEVEL DEPTH)	16.13	(from ground)	0.25 FT ground to casing
I.D. OF DRILLING RODS	2 INCH				

TESTED INTERVAL FROM / TO (FT)	TIME (HR:MIN:SEC)	ELAPSED TIME (Δt MIN)	DEPTH UNDER WATER (FT)	DEPTH TO WATER (FT)	CUMULATIVE RECOVERY (ΔH FT)	RECOVERY RATE (ΔH/Δt)
146-156	11:06	0	130.007	27.19	0.00	-
L= 10.0 ft	11:07	1	131.013	26.19	1.01	1.00600
	11:08	2	131.918	25.28	1.91	0.95550
	11:09	3	132.709	24.49	2.70	0.90067
	11:10	4	133.471	23.73	3.46	0.86600
	11:11	5	134.132	23.07	4.13	0.82500
	11:12	6	134.750	22.45	4.74	0.79050
	11:13	7	135.354	21.85	5.35	0.76386
	11:14	8	135.857	21.34	5.85	0.73125
	11:15	9	136.360	20.84	6.35	0.70589
	11:16	10	136.820	20.38	6.81	0.68130
	11:17	11	137.251	19.95	7.24	0.65855
	11:18	12	137.700	19.50	7.69	0.64108
	11:19	13	137.970	19.23	7.96	0.61254
	11:20	14	138.300	18.90	8.29	0.59236
	11:21	15	138.631	18.57	8.62	0.57493
	11:22	16	138.904	18.30	8.90	0.55606
	11:23	17	139.149	18.05	9.14	0.53776
	11:24	18	139.364	17.84	9.36	0.51983
	11:25	19	139.551	17.65	9.54	0.50232
	11:26	20	139.738	17.46	9.73	0.48655
	11:27	21	139.882	17.32	9.88	0.47024
	11:28	22	140.054	17.15	10.05	0.45668
	11:29	23	140.155	17.05	10.15	0.44122
	11:30	24	140.284	16.92	10.28	0.42821
	11:31	25	140.371	16.83	10.36	0.41456
	11:36	30	140.730	16.47	10.72	0.35743
	11:41	35	140.903	16.30	10.90	0.31131

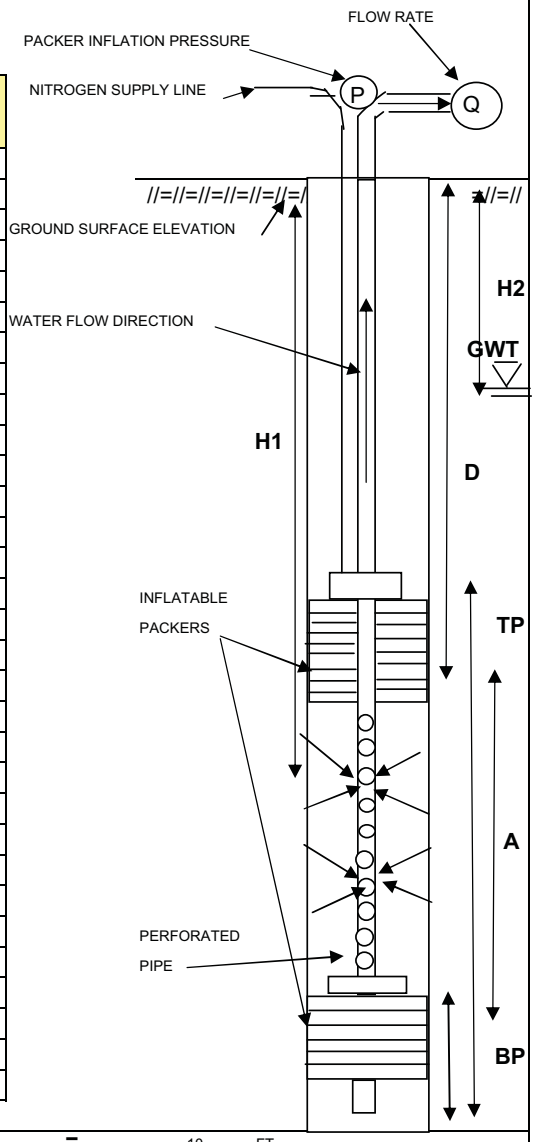

LEGEND:				
	A - TOTAL LENGTH OF TEST SECTION (FT)	=	10	FT
	TP - TOTAL LENGTH OF TOP PACKER AND ASSEMBLY	=	16.85	FT
	BP - TOTAL LENGTH OF BOTTOM PACKER AND ASSEMBLY	=	3.5	FT
	D - DISTANCE BETWEEN GROUND SURFACE AND TOP OF THE TEST ZONE	=	146	FT
	PIP - PACKER INFLATION PRESSURE (D PSI **+ 50 PSI**)	=	185	PSI
	H1- DISTANCE BETWEEN WATER PRESSURE GAUGE AND GROUND SURFACE	=	157.2	FT
	H2- DISTANCE BETWEEN GROUND SURFACE AND GROUND WATER TABLE	=	16.13	FT
	Q = VOL/TIME = (ΔH/Δt) * CONV FACTOR (0.653 GAL/FT)	=		GAL/MIN

GZA

BORING NO. /TEST NO. MW-40 T3

PACKER TEST LOG

GZA GEOENVIRONMENTAL OF NEW YORK 440 NINTH AVENUE, 18th FLOOR NEW YORK, NEW YORK 10001 SCIENTISTS AND ENGINEERS	Client Entergy Indian Point Energy Cente Buchanan, NY	BORING NO./TEST NO.	MW-40 T4
		SHEET	1 of 1
		FILE NO.	41.0017869.01
		PROJECT LOCATION	Indian Point

CONTRACTOR	Aquifer Drilling & Testing, Inc.	BORING COORDINATES	N 461950.5094	E 603899.3458	
FOREMAN	Lloyd Adams	GROUND SURFACE EL.(FT)	74.987	DATUM	NGVD 29
GZA ENG.	Sara Covelli	FINAL BORING DEPTH (FT)	193	DATE START/END	5/11/06
DIAMETER OF DRILLED BOREHOLE	3.83 INCH	GROUND WATER DEPTH (STATIC WATER LEVEL DEPTH)	16.13	(from ground)	0.25 FT ground to casing
I.D. OF DRILLING RODS	2 INCH				

TESTED INTERVAL FROM / TO (FT)	TIME (HR:MIN:SEC)	ELAPSED TIME (Δt MIN)	DEPTH UNDER WATER (FT)	DEPTH TO WATER (FT)	CUMULATIVE RECOVERY (ΔH FT)	RECOVERY RATE (ΔH/Δt)
127-137	13:10	0	111.301	26.90	0.00	-
L= 10.0 ft	13:11	1	112.105	26.10	0.80	0.80400
	13:12	2	112.881	25.32	1.58	0.79000
	13:13	3	113.585	24.62	2.28	0.76133
	13:14	4	114.260	23.94	2.96	0.73975
	13:15	5	114.877	23.32	3.58	0.71520
	13:16	6	115.466	22.73	4.16	0.69417
	13:17	7	115.983	22.22	4.68	0.66886
	13:18	8	116.486	21.71	5.19	0.64813
	13:19	9	116.932	21.27	5.63	0.62567
	13:20	10	117.348	20.85	6.05	0.60470
	13:21	11	117.736	20.46	6.44	0.58500
	13:22	12	118.081	20.12	6.78	0.56500
	13:23	13	118.397	19.80	7.10	0.54585
	13:24	14	118.699	19.50	7.40	0.52843
	13:25	15	118.986	19.21	7.69	0.51233
	13:26	16	119.230	18.97	7.93	0.49556
	13:27	17	119.489	18.71	8.19	0.48165
	13:28	18	119.690	18.51	8.39	0.46606
	13:29	19	119.905	18.30	8.60	0.45284
	13:30	20	120.078	18.12	8.78	0.43885
	13:31	21	120.236	17.96	8.94	0.42548
	13:32	22	120.408	17.79	9.11	0.41395
	13:33	23	120.537	17.66	9.24	0.40157
	13:34	24	120.667	17.53	9.37	0.39025
	13:35	25	120.810	17.39	9.51	0.38036
	13:40	30	121.285	16.92	9.98	0.33280
	13:45	35	121.586	16.61	10.29	0.29386
	13:50	40	121.759	16.44	10.46	0.26145
	13:55	45	121.859	16.34	10.56	0.23462
	14:00	50	121.917	16.28	10.62	0.21232

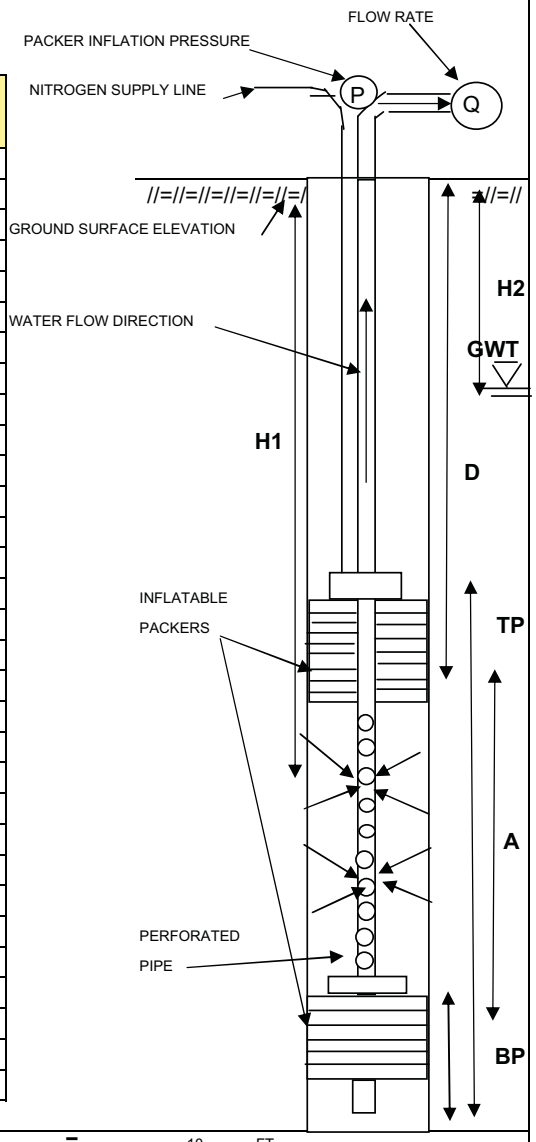

LEGEND:				
	A - TOTAL LENGTH OF TEST SECTION (FT)	=	10	FT
	TP - TOTAL LENGTH OF TOP PACKER AND ASSEMBLY	=	16.85	FT
	BP - TOTAL LENGTH OF BOTTOM PACKER AND ASSEMBLY	=	3.5	FT
	D - DISTANCE BETWEEN GROUND SURFACE AND TOP OF THE TEST ZONE	=	127	FT
	PIP - PACKER INFLATION PRESSURE (D PSI **+ 50 PSI**)	=	185	PSI
	H1- DISTANCE BETWEEN WATER PRESSURE GAUGE AND GROUND SURFACE	=	138.2	FT
	H2- DISTANCE BETWEEN GROUND SURFACE AND GROUND WATER TABLE	=	16.13	FT
	Q = VOL/TIME = (ΔH/Δt) * CONV FACTOR (0.653 GAL/FT)	=		GAL/MIN

GZA

BORING NO. /TEST NO. MW-40 T4

PACKER TEST LOG

GZA GEOENVIRONMENTAL OF NEW YORK 440 NINTH AVENUE, 18th FLOOR NEW YORK, NEW YORK 10001 SCIENTISTS AND ENGINEERS	Client Entergy Indian Point Energy Cente Buchanan, NY	BORING NO./TEST NO.	MW-40 T5
		SHEET	1 of 1
		FILE NO.	41.0017869.01
		PROJECT LOCATION	Indian Point

CONTRACTOR	Aquifer Drilling & Testing, Inc.	BORING COORDINATES	N 461950.5094	E 603899.3458	
FOREMAN	Lloyd Adams	GROUND SURFACE EL.(FT)	74.987	DATUM	NGVD 29
GZA ENG.	Sara Covelli	FINAL BORING DEPTH (FT)	193	DATE START/END	5/11/06
DIAMETER OF DRILLED BOREHOLE	3.83 INCH	GROUND WATER DEPTH (STATIC WATER LEVEL DEPTH)	16.13	(from ground)	0.25 FT ground to casing
I.D. OF DRILLING RODS	2 INCH				

TESTED INTERVAL FROM / TO (FT)	TIME (HR:MIN:SEC)	ELAPSED TIME (Δt MIN)	DEPTH UNDER WATER (FT)	DEPTH TO WATER (FT)	CUMULATIVE RECOVERY (ΔH FT)	RECOVERY RATE (ΔH/Δt)
95-105	15:15	0	74.914	31.29	0.00	-
L= 10.0 ft	15:16	1	76.291	29.91	1.38	1.37700
	15:17	2	77.597	28.60	2.68	1.34150
	15:18	3	78.802	27.40	3.89	1.29600
	15:19	4	79.907	26.29	4.99	1.24825
	15:20	5	80.940	25.26	6.03	1.20520
	15:21	6	81.858	24.34	6.94	1.15733
	15:22	7	82.719	23.48	7.80	1.11500
	15:23	8	83.494	22.71	8.58	1.07250
	15:24	9	84.168	22.03	9.25	1.02822
	15:25	10	84.800	21.40	9.89	0.98860
	15:26	11	85.374	20.83	10.46	0.95091
	15:27	12	85.818	20.38	10.90	0.90867
	15:28	13	86.220	19.98	11.31	0.86969
	15:29	14	86.565	19.64	11.65	0.83221
	15:30	15	86.866	19.33	11.95	0.79680
	15:31	16	87.167	19.03	12.25	0.76581
	15:32	17	87.411	18.79	12.50	0.73512
	15:33	18	87.641	18.56	12.73	0.70706
	15:34	19	87.856	18.34	12.94	0.68116
	15:35	20	88.043	18.16	13.13	0.65645
	15:36	21	88.201	18.00	13.29	0.63271
	15:37	22	88.373	17.83	13.46	0.61177
	15:38	23	88.502	17.70	13.59	0.59078
	15:39	24	88.617	17.58	13.70	0.57096
	15:40	25	88.746	17.45	13.83	0.55328
	15:41	26	88.846	17.35	13.93	0.53585
	15:42	27	88.933	17.27	14.02	0.51922
	15:43	28	89.004	17.20	14.09	0.50321
	15:48	33	89.320	16.88	14.41	0.43655
	15:53	38	89.492	16.71	14.58	0.38363

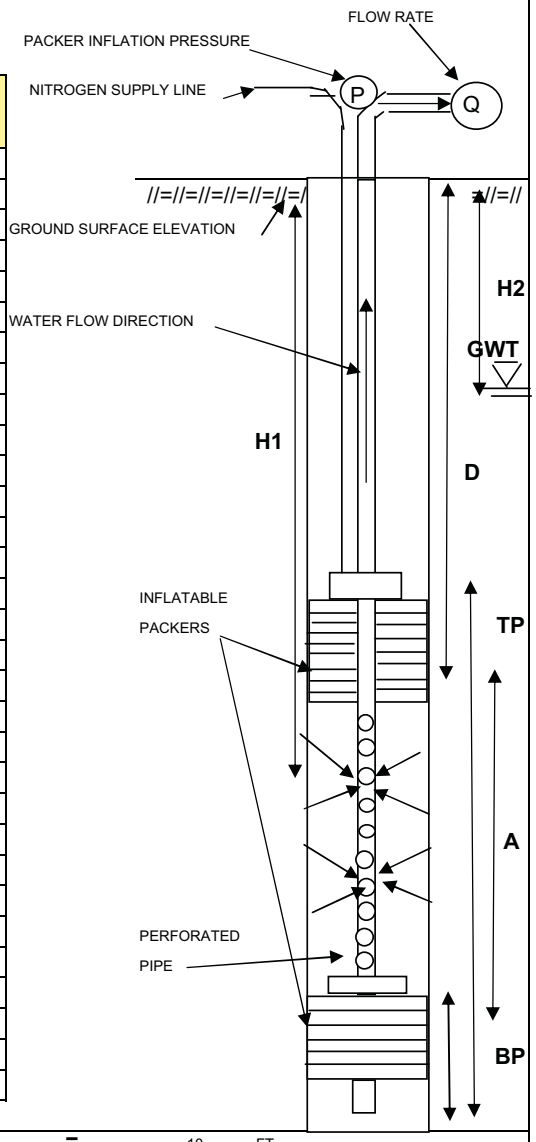

LEGEND:				
	A - TOTAL LENGTH OF TEST SECTION (FT)	=	10	FT
	TP - TOTAL LENGTH OF TOP PACKER AND ASSEMBLY	=	16.85	FT
	BP - TOTAL LENGTH OF BOTTOM PACKER AND ASSEMBLY	=	3.5	FT
	D - DISTANCE BETWEEN GROUND SURFACE AND TOP OF THE TEST ZONE	=	95	FT
	PIP - PACKER INFLATION PRESSURE (D PSI **+ 50 PSI**)	=	185	PSI
	H1- DISTANCE BETWEEN WATER PRESSURE GAUGE AND GROUND SURFACE	=	106.2	FT
	H2- DISTANCE BETWEEN GROUND SURFACE AND GROUND WATER TABLE	=	16.13	FT
	Q = VOL/TIME = (ΔH/Δt) * CONV FACTOR (0.653 GAL/FT)	=		GAL/MIN

GZA

BORING NO. /TEST NO. MW-40 T5

PACKER TEST LOG

GZA GEOENVIRONMENTAL OF NEW YORK 440 NINTH AVENUE, 18th FLOOR NEW YORK, NEW YORK 10001 SCIENTISTS AND ENGINEERS	Client Entergy Indian Point Energy Cente Buchanan, NY	BORING NO./TEST NO.	MW-40 T6
		SHEET	1 of 1
		FILE NO.	41.0017869.01
		PROJECT LOCATION	Indian Point

CONTRACTOR	Aquifer Drilling & Testing, Inc.	BORING COORDINATES	N 461950.5094	E 603899.3458	
FOREMAN	Lloyd Adams	GROUND SURFACE EL.(FT)	74.987	DATUM	NGVD 29
GZA ENG.	Sara Covelli	FINAL BORING DEPTH (FT)	193	DATE START/END	5/12/06
DIAMETER OF DRILLED BOREHOLE	3.83 INCH	GROUND WATER DEPTH (STATIC WATER LEVEL DEPTH)	15.60	(from ground)	0.25 FT ground to casing
I.D. OF DRILLING RODS	2 INCH				

TESTED INTERVAL FROM / TO (FT)	TIME (HR:MIN:SEC)	ELAPSED TIME (Δt MIN)	DEPTH UNDER WATER (FT)	DEPTH TO WATER (FT)	CUMULATIVE RECOVERY (ΔH FT)	RECOVERY RATE (ΔH/Δt)
80-90	12:42	0	63.885	27.32	0.00	-
L= 10.0 ft	12:43	1	64.903	26.30	1.02	1.01800
	12:44	2	65.764	25.44	1.88	0.93950
	12:45	3	66.495	24.71	2.61	0.87000
	12:46	4	67.155	24.05	3.27	0.81750
	12:47	5	67.671	23.53	3.79	0.75720
	12:48	6	68.116	23.08	4.23	0.70517
	12:49	7	68.474	22.73	4.59	0.65557
	12:50	8	68.761	22.44	4.88	0.60950
	12:51	9	68.991	22.21	5.11	0.56733
	12:52	10	69.206	21.99	5.32	0.53210
	12:53	11	69.349	21.85	5.46	0.49673
	12:54	12	69.464	21.74	5.58	0.46492
	12:55	13	69.579	21.62	5.69	0.43800
	12:56	14	69.650	21.55	5.77	0.41179
	12:57	15	69.708	21.49	5.82	0.38820
	12:58	16	69.765	21.44	5.88	0.36750
	12:59	17	69.808	21.39	5.92	0.34841
	13:00	18	69.822	21.38	5.94	0.32983
	13:01	19	69.851	21.35	5.97	0.31400
	13:02	20	69.880	21.32	6.00	0.29975
	13:03	21	69.908	21.29	6.02	0.28681
	13:04	22	69.923	21.28	6.04	0.27445
	13:05	23	69.937	21.26	6.05	0.26313
	13:06	24	69.951	21.25	6.07	0.25275
	13:07	25	69.951	21.25	6.07	0.24264
	13:08	26	69.980	21.22	6.10	0.23442
	13:09	27	69.980	21.22	6.10	0.22574
	13:10	28	69.994	21.21	6.11	0.21818
	13:11	29	69.994	21.21	6.11	0.21066
	13:12	30	69.994	21.21	6.11	0.20363

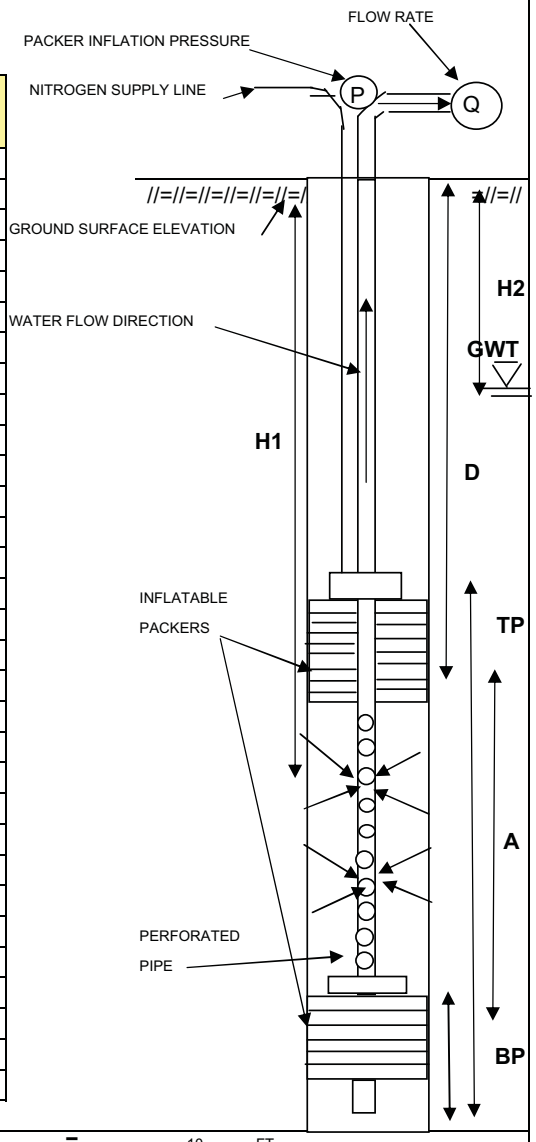

LEGEND:				
	A - TOTAL LENGTH OF TEST SECTION (FT)	=	10	FT
	TP - TOTAL LENGTH OF TOP PACKER AND ASSEMBLY	=	16.85	FT
	BP - TOTAL LENGTH OF BOTTOM PACKER AND ASSEMBLY	=	3.5	FT
	D - DISTANCE BETWEEN GROUND SURFACE AND TOP OF THE TEST ZONE	=	80	FT
	PIP - PACKER INFLATION PRESSURE (D PSI **+ 50 PSI**)	=	185	PSI
	H1- DISTANCE BETWEEN WATER PRESSURE GAUGE AND GROUND SURFACE	=	91.2	FT
	H2- DISTANCE BETWEEN GROUND SURFACE AND GROUND WATER TABLE	=	15.60	FT
	Q = VOL/TIME = (ΔH/Δt) * CONV FACTOR (0.653 GAL/FT)	=		GAL/MIN

GZA

BORING NO. /TEST NO. MW-40 T6

PACKER TEST LOG

GZA GEOENVIRONMENTAL OF NEW YORK 440 NINTH AVENUE, 18th FLOOR NEW YORK, NEW YORK 10001 SCIENTISTS AND ENGINEERS	Client Entergy Indian Point Energy Cente Buchanan, NY	BORING NO./TEST NO.	MW-40 T7
		SHEET	1 of 1
		FILE NO.	41.0017869.01
		PROJECT LOCATION	Indian Point

CONTRACTOR	Aquifer Drilling & Testing, Inc.	BORING COORDINATES	N 461950.5094	E 603899.3458	
FOREMAN	Lloyd Adams	GROUND SURFACE EL.(FT)	74.987	DATUM	NGVD 29
GZA ENG.	Sara Covelli	FINAL BORING DEPTH (FT)	193	DATE START/END	5/15/06
DIAMETER OF DRILLED BOREHOLE	3.83 INCH	GROUND WATER DEPTH (STATIC WATER LEVEL DEPTH)	16.05 (from ground)		0.25 FT ground to casing
I.D. OF DRILLING RODS	2 INCH				

TESTED INTERVAL FROM / TO (FT)	TIME (HR:MIN:SEC)	ELAPSED TIME (Δt MIN)	DEPTH UNDER WATER (FT)	DEPTH TO WATER (FT)	CUMULATIVE RECOVERY (ΔH FT)	RECOVERY RATE (ΔH/Δt)
62.5-72.5	8:21	0	46.726	26.97	0.00	-
L= 10.0 ft	8:22	1	47.400	26.30	0.67	0.67400
	8:23	2	48.030	25.67	1.30	0.65200
	8:24	3	48.589	25.11	1.86	0.62100
	8:25	4	49.134	24.57	2.41	0.60200
	8:26	5	49.650	24.05	2.92	0.58480
	8:27	6	50.123	23.58	3.40	0.56617
	8:28	7	50.567	23.13	3.84	0.54871
	8:29	8	50.983	22.72	4.26	0.53213
	8:30	9	51.398	22.30	4.67	0.51911
	8:31	10	51.771	21.93	5.05	0.50450
	8:32	11	52.115	21.59	5.39	0.48991
	8:33	12	52.445	21.26	5.72	0.47658
	8:34	13	52.760	20.94	6.03	0.46415
	8:35	14	53.061	20.64	6.34	0.45250
	8:36	15	53.319	20.38	6.59	0.43953
	8:37	16	53.577	20.12	6.85	0.42819
	8:38	17	53.821	19.88	7.10	0.41735
	8:39	18	54.050	19.65	7.32	0.40689
	8:40	19	54.251	19.45	7.53	0.39605
	8:41	20	54.437	19.26	7.71	0.38555
	8:46	25	55.197	18.50	8.47	0.33884
	8:51	30	55.613	18.09	8.89	0.29623
	8:56	35	55.842	17.86	9.12	0.26046
	9:01	40	55.985	17.72	9.26	0.23148
	9:06	45	56.057	17.64	9.33	0.20736
	9:11	50	56.100	17.60	9.37	0.18748
	9:16	55	56.143	17.56	9.42	0.17122
	9:21	60	56.157	17.54	9.43	0.15718

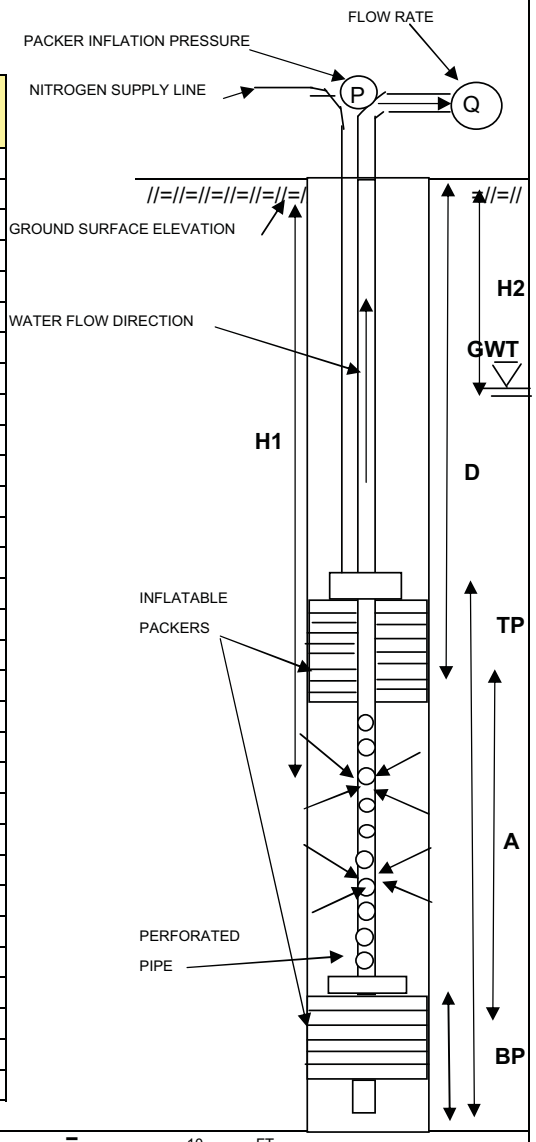

LEGEND:				
	A - TOTAL LENGTH OF TEST SECTION (FT)	=	10	FT
	TP - TOTAL LENGTH OF TOP PACKER AND ASSEMBLY	=	16.85	FT
	BP - TOTAL LENGTH OF BOTTOM PACKER AND ASSEMBLY	=	3.5	FT
	D - DISTANCE BETWEEN GROUND SURFACE AND TOP OF THE TEST ZONE	=	62.5	FT
	PIP - PACKER INFLATION PRESSURE (D PSI **+ 50 PSI**)	=	185	PSI
	H1- DISTANCE BETWEEN WATER PRESSURE GAUGE AND GROUND SURFACE	=	73.7	FT
	H2- DISTANCE BETWEEN GROUND SURFACE AND GROUND WATER TABLE	=	16.05	FT
	Q = VOL/TIME = (ΔH/Δt) * CONV FACTOR (0.653 GAL/FT)	=		GAL/MIN

GZA

BORING NO. /TEST NO. MW-40 T7

PACKER TEST LOG

GZA GEOENVIRONMENTAL OF NEW YORK 440 NINTH AVENUE, 18th FLOOR NEW YORK, NEW YORK 10001 SCIENTISTS AND ENGINEERS	Client Entergy Indian Point Energy Cente Buchanan, NY	BORING NO./TEST NO.	MW-40 T8
		SHEET	1 of 1
		FILE NO.	41.0017869.01
		PROJECT LOCATION	Indian Point

CONTRACTOR	Aquifer Drilling & Testing, Inc.	BORING COORDINATES	N 461950.5094	E 603899.3458	
FOREMAN	Lloyd Adams	GROUND SURFACE EL.(FT)	74.987	DATUM	NGVD 29
GZA ENG.	Sara Covelli	FINAL BORING DEPTH (FT)	193	DATE START/END	5/15/06
DIAMETER OF DRILLED BOREHOLE	3.83 INCH	GROUND WATER DEPTH (STATIC WATER LEVEL DEPTH)	16.15 (from ground)		0.25 FT ground to casing
I.D. OF DRILLING RODS	2 INCH				

TESTED INTERVAL FROM / TO (FT)	TIME (HR:MIN:SEC)	ELAPSED TIME (Δt MIN)	DEPTH UNDER WATER (FT)	DEPTH TO WATER (FT)	CUMULATIVE RECOVERY (ΔH FT)	RECOVERY RATE (ΔH/Δt)
52-62	10:20	0	35.536	27.66	0.00	-
L= 10.0 ft	10:21	1	36.008	27.19	0.47	0.47200
	10:22	2	36.481	26.72	0.95	0.47250
	10:23	3	36.882	26.32	1.35	0.44867
	10:24	4	37.283	25.92	1.75	0.43675
	10:25	5	37.670	25.53	2.13	0.42680
	10:26	6	38.043	25.16	2.51	0.41783
	10:27	7	38.401	24.80	2.87	0.40929
	10:28	8	38.745	24.46	3.21	0.40113
	10:29	9	39.060	24.14	3.52	0.39156
	10:30	10	39.375	23.83	3.84	0.38390
	10:31	11	39.676	23.52	4.14	0.37636
	10:32	12	39.948	23.25	4.41	0.36767
	10:33	13	40.235	22.97	4.70	0.36146
	10:34	14	40.507	22.69	4.97	0.35507
	10:35	15	40.750	22.45	5.21	0.34760
	10:36	16	40.994	22.21	5.46	0.34113
	10:37	17	41.209	21.99	5.67	0.33371
	10:38	18	41.438	21.76	5.90	0.32789
	10:39	19	41.653	21.55	6.12	0.32195
	10:40	20	41.868	21.33	6.33	0.31660
	10:45	25	42.771	20.43	7.24	0.28940
	10:50	30	43.516	19.68	7.98	0.26600
	10:55	35	44.146	19.05	8.61	0.24600
	11:00	40	44.677	18.52	9.14	0.22853
	11:10	50	45.436	17.76	9.90	0.19800
	11:20	60	45.923	17.28	10.39	0.17312
	11:30	70	46.239	16.96	10.70	0.15290
	11:40	80	46.439	16.76	10.90	0.13629
	11:50	90	46.554	16.65	11.02	0.12242
	12:20	120	46.726	16.47	11.19	0.09325

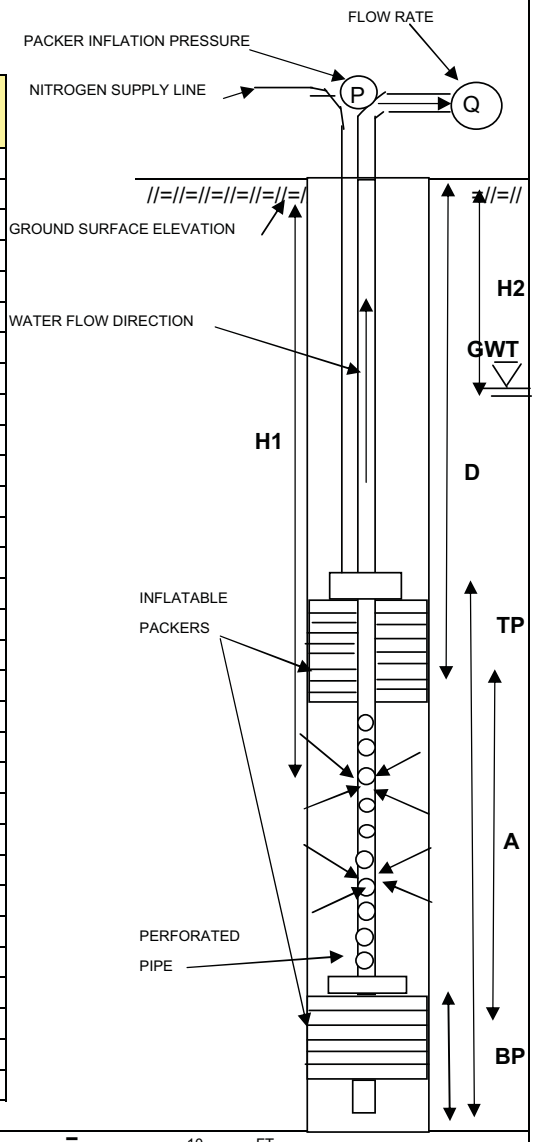

LEGEND:				
	A - TOTAL LENGTH OF TEST SECTION (FT)	=	10	FT
	TP - TOTAL LENGTH OF TOP PACKER AND ASSEMBLY	=	16.85	FT
	BP - TOTAL LENGTH OF BOTTOM PACKER AND ASSEMBLY	=	3.5	FT
	D - DISTANCE BETWEEN GROUND SURFACE AND TOP OF THE TEST ZONE	=	52	FT
	PIP - PACKER INFLATION PRESSURE (D PSI **+ 50 PSI**)	=	185	PSI
	H1- DISTANCE BETWEEN WATER PRESSURE GAUGE AND GROUND SURFACE	=	63.2	FT
	H2- DISTANCE BETWEEN GROUND SURFACE AND GROUND WATER TABLE	=	16.15	FT
	Q = VOL/TIME = (ΔH/Δt) * CONV FACTOR (0.653 GAL/FT)	=		GAL/MIN

GZA

BORING NO. /TEST NO. MW-40 T8

PACKER TEST LOG

GZA GEOENVIRONMENTAL OF NEW YORK 440 NINTH AVENUE, 18th FLOOR NEW YORK, NEW YORK 10001 SCIENTISTS AND ENGINEERS	Client Entergy Indian Point Energy Cente Buchanan, NY	BORING NO./TEST NO.	MW-40 T9
		SHEET	1 of 1
		FILE NO.	41.0017869.01
		PROJECT LOCATION	Indian Point

CONTRACTOR	Aquifer Drilling & Testing, Inc.	BORING COORDINATES	N 461950.5094	E 603899.3458	
FOREMAN	Lloyd Adams	GROUND SURFACE EL.(FT)	74.987	DATUM	NGVD 29
GZA ENG.	Sara Covelli	FINAL BORING DEPTH (FT)	193	DATE START/END	5/15/06
DIAMETER OF DRILLED BOREHOLE	3.83 INCH	GROUND WATER DEPTH (STATIC WATER LEVEL DEPTH)	16.15	(from ground)	0.25 FT ground to casing
I.D. OF DRILLING RODS	2 INCH				

TESTED INTERVAL FROM / TO (FT)	TIME (HR:MIN:SEC)	ELAPSED TIME (Δt MIN)	DEPTH UNDER WATER (FT)	DEPTH TO WATER (FT)	CUMULATIVE RECOVERY (ΔH FT)	RECOVERY RATE (ΔH/Δt)
44-54	13:59	0	28.216	26.98	0.00	-
L= 10.0 ft	14:00	1	28.674	26.53	0.46	0.45800
	14:01	2	29.075	26.13	0.86	0.42950
	14:02	3	29.491	25.71	1.28	0.42500
	14:03	4	29.863	25.34	1.65	0.41175
	14:04	5	30.221	24.98	2.01	0.40100
	14:05	6	30.565	24.64	2.35	0.39150
	14:06	7	30.909	24.29	2.69	0.38471
	14:07	8	31.224	23.98	3.01	0.37600
	14:08	9	31.525	23.68	3.31	0.36767
	14:09	10	31.825	23.38	3.61	0.36090
	14:10	11	32.112	23.09	3.90	0.35418
	14:11	12	32.370	22.83	4.15	0.34617
	14:12	13	32.628	22.57	4.41	0.33938
	14:13	14	32.871	22.33	4.66	0.33250
	14:14	15	33.115	22.09	4.90	0.32660
	14:15	16	33.344	21.86	5.13	0.32050
	14:16	17	33.559	21.64	5.34	0.31429
	14:17	18	33.759	21.44	5.54	0.30794
	14:18	19	33.960	21.24	5.74	0.30232
	14:19	20	34.132	21.07	5.92	0.29580
	14:24	25	34.962	20.24	6.75	0.26984
	14:29	30	35.621	19.58	7.41	0.24683
	14:34	35	36.137	19.06	7.92	0.22631
	14:39	40	36.553	18.65	8.34	0.20843
	14:44	45	36.882	18.32	8.67	0.19258
	14:49	50	37.111	18.09	8.90	0.17790
	14:54	55	37.312	17.89	9.10	0.16538
	14:59	60	37.455	17.75	9.24	0.15398
	15:04	65	37.570	17.63	9.35	0.14391
	15:09	70	37.670	17.53	9.45	0.13506

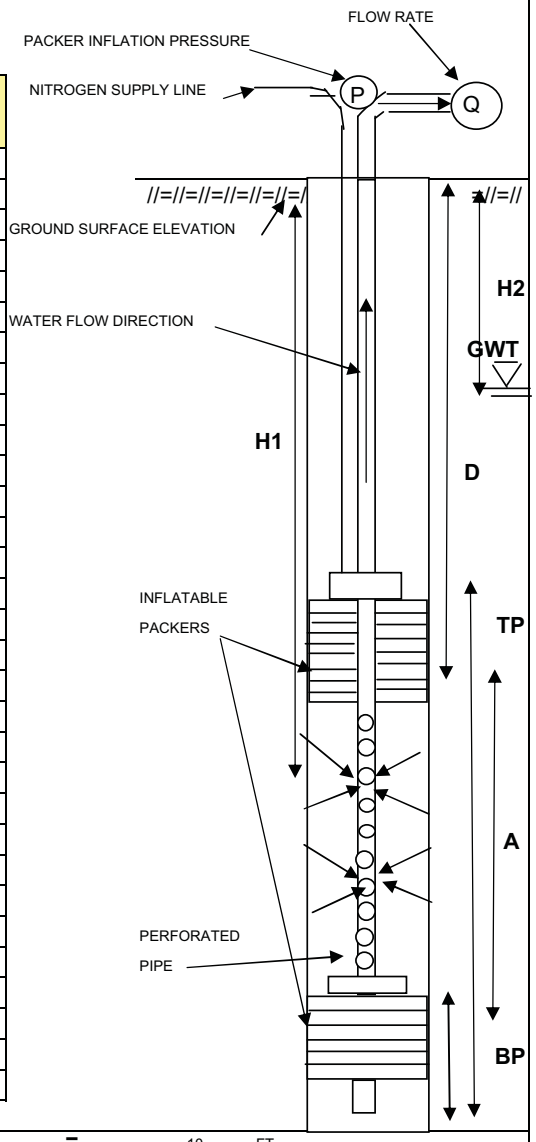

LEGEND:				
	A - TOTAL LENGTH OF TEST SECTION (FT)	=	10	FT
	TP - TOTAL LENGTH OF TOP PACKER AND ASSEMBLY	=	16.85	FT
	BP - TOTAL LENGTH OF BOTTOM PACKER AND ASSEMBLY	=	3.5	FT
	D - DISTANCE BETWEEN GROUND SURFACE AND TOP OF THE TEST ZONE	=	44	FT
	PIP - PACKER INFLATION PRESSURE (D PSI **+ 50 PSI**)	=	185	PSI
	H1- DISTANCE BETWEEN WATER PRESSURE GAUGE AND GROUND SURFACE	=	55.2	FT
	H2- DISTANCE BETWEEN GROUND SURFACE AND GROUND WATER TABLE	=	16.15	FT
	Q = VOL/TIME = (ΔH/Δt) * CONV FACTOR (0.653 GAL/FT)	=		GAL/MIN

GZA

BORING NO. /TEST NO. MW-40 T9

PACKER TEST LOG

GZA GEOENVIRONMENTAL OF NEW YORK 440 NINTH AVENUE, 18th FLOOR NEW YORK, NEW YORK 10001 SCIENTISTS AND ENGINEERS	Client Entergy Indian Point Energy Cente Buchanan, NY	BORING NO./TEST NO.	MW-40 T10
		SHEET	1 of 1
		FILE NO.	41.0017869.01
		PROJECT LOCATION	Indian Point

CONTRACTOR	Aquifer Drilling & Testing, Inc.	BORING COORDINATES	N 461950.5094	E 603899.3458	
FOREMAN	Lloyd Adams	GROUND SURFACE EL.(FT)	74.987	DATUM	NGVD 29
GZA ENG.	Sara Covelli	FINAL BORING DEPTH (FT)	193	DATE START/END	5/16/06
DIAMETER OF DRILLED BOREHOLE	3.83 INCH	GROUND WATER DEPTH (STATIC WATER LEVEL DEPTH)	16.26	(from ground)	0.25 FT ground to casing
I.D. OF DRILLING RODS	2 INCH				

TESTED INTERVAL FROM / TO (FT)	TIME (HR:MIN:SEC)	ELAPSED TIME (Δt MIN)	DEPTH UNDER WATER (FT)	DEPTH TO WATER (FT)	CUMULATIVE RECOVERY (ΔH FT)	RECOVERY RATE (ΔH/Δt)
44-54	8:27	0	19.180	26.02	0.00	-
L= 10.0 ft	8:28	1	21.757	23.44	2.58	2.57700
	8:29	2	23.805	21.40	4.63	2.31250
	8:30	3	25.051	20.15	5.87	1.95700
	8:31	4	25.753	19.45	6.57	1.64325
	8:32	5	26.354	18.85	7.17	1.43480
	8:33	6	26.841	18.36	7.66	1.27683
	8:34	7	27.256	17.94	8.08	1.15371
	8:35	8	27.615	17.59	8.44	1.05438
	8:36	9	27.887	17.31	8.71	0.96744
	8:37	10	28.130	17.07	8.95	0.89500
	8:38	11	28.316	16.88	9.14	0.83055
	8:39	12	28.488	16.71	9.31	0.77567
	8:40	13	28.617	16.58	9.44	0.72592
	8:41	14	28.732	16.47	9.55	0.68229
	8:42	15	28.818	16.38	9.64	0.64253
	8:43	16	28.903	16.30	9.72	0.60769
	8:44	17	28.961	16.24	9.78	0.57535
	8:45	18	29.018	16.18	9.84	0.54656
	8:46	19	29.047	16.15	9.87	0.51932
	8:47	20	29.090	16.11	9.91	0.49550
	8:52	25	29.204	16.00	10.02	0.40096
	8:57	30	29.262	15.94	10.08	0.33607
	9:00	32	29.333	15.87	10.15	0.31728

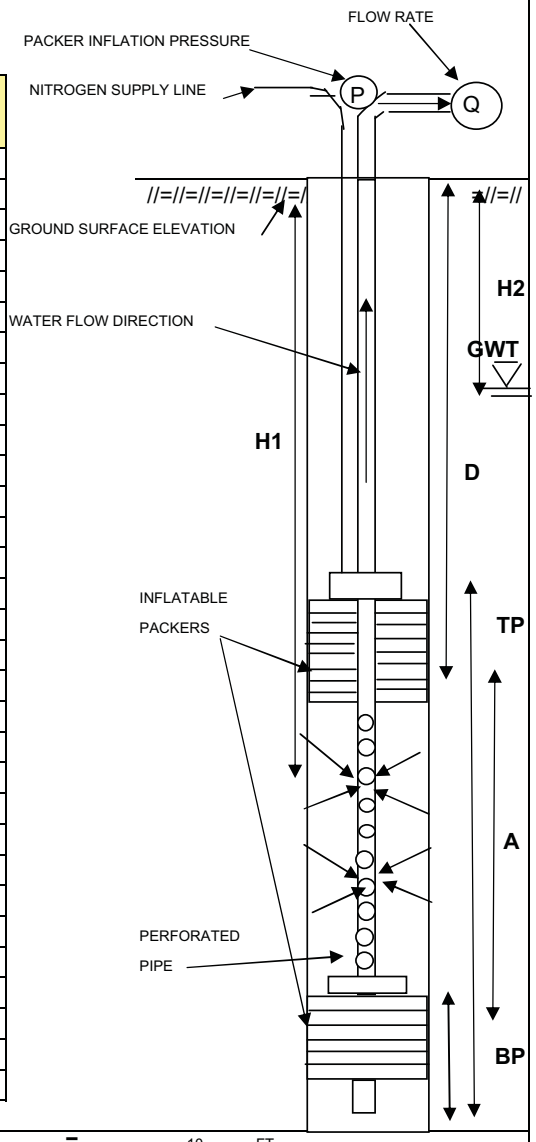

LEGEND:				
	A - TOTAL LENGTH OF TEST SECTION (FT)	=	10	FT
	TP - TOTAL LENGTH OF TOP PACKER AND ASSEMBLY	=	16.85	FT
	BP - TOTAL LENGTH OF BOTTOM PACKER AND ASSEMBLY	=	3.5	FT
	D - DISTANCE BETWEEN GROUND SURFACE AND TOP OF THE TEST ZONE	=	34	FT
	PIP - PACKER INFLATION PRESSURE (D PSI **+ 50 PSI**)	=	185	PSI
	H1- DISTANCE BETWEEN WATER PRESSURE GAUGE AND GROUND SURFACE	=	45.2	FT
	H2- DISTANCE BETWEEN GROUND SURFACE AND GROUND WATER TABLE	=	16.26	FT
	Q = VOL/TIME = (ΔH/Δt) * CONV FACTOR (0.653 GAL/FT)	=		GAL/MIN

GZA

BORING NO. /TEST NO. MW-40 T10

PACKER TEST LOG

GZA GEOENVIRONMENTAL OF NEW YORK 440 NINTH AVENUE, 18th FLOOR NEW YORK, NEW YORK 10001 SCIENTISTS AND ENGINEERS	Client Entergy Indian Point Energy Cente Buchanan, NY	BORING NO./TEST NO.	MW-40 T11
		SHEET	1 of 1
		FILE NO.	41.0017869.01
		PROJECT LOCATION	Indian Point

CONTRACTOR	Aquifer Drilling & Testing, Inc.	BORING COORDINATES	N 461950.5094	E 603899.3458	
FOREMAN	Lloyd Adams	GROUND SURFACE EL.(FT)	74.987	DATUM	NGVD 29
GZA ENG.	Sara Covelli	FINAL BORING DEPTH (FT)	193	DATE START/END	5/16/06
DIAMETER OF DRILLED BOREHOLE	3.83 INCH	GROUND WATER DEPTH (STATIC WATER LEVEL DEPTH)	16.26	(from ground)	0.25 FT ground to casing
I.D. OF DRILLING RODS	2 INCH				

TESTED INTERVAL FROM / TO (FT)	TIME (HR:MIN:SEC)	ELAPSED TIME (Δt MIN)	DEPTH UNDER WATER (FT)	DEPTH TO WATER (FT)	CUMULATIVE RECOVERY (ΔH FT)	RECOVERY RATE (ΔH/Δt)
28-38	9:49:00	0.0	9.961	29.24	0.00	-
L= 10.0 ft	9:49:30	0.5	12.867	26.33	2.91	5.81200
	9:50:00	1.0	15.401	23.80	5.44	5.44000
	9:50:30	1.5	17.004	22.20	7.04	4.69533
	9:51:00	2.0	18.307	20.89	8.35	4.17300
	9:52:00	3.0	20.211	18.99	10.25	3.41667
	9:53:00	4.0	21.400	17.80	11.44	2.85975
	9:54:00	5.0	22.115	17.09	12.15	2.43080
	9:55:00	6.0	22.574	16.63	12.61	2.10217
	9:56:00	7.0	22.874	16.33	12.91	1.84471
	9:57:00	8.0	23.046	16.15	13.09	1.63563
	9:58:00	9.0	23.175	16.03	13.21	1.46822
	9:59:00	10.0	23.247	15.95	13.29	1.32860
	10:00:00	11.0	23.290	15.91	13.33	1.21173

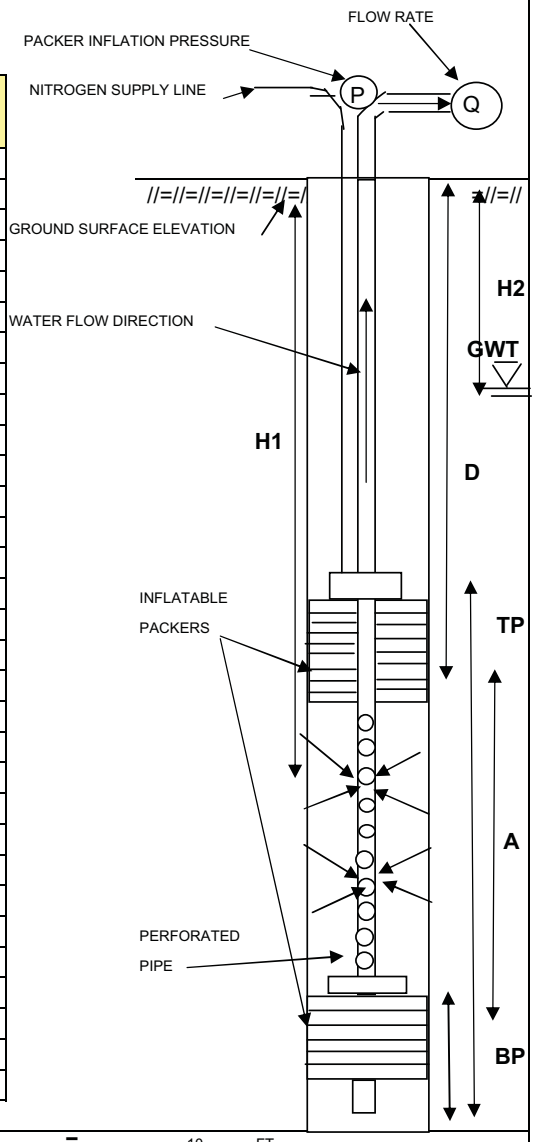

LEGEND:				
	A - TOTAL LENGTH OF TEST SECTION (FT)	=	10	FT
	TP - TOTAL LENGTH OF TOP PACKER AND ASSEMBLY	=	16.85	FT
	BP - TOTAL LENGTH OF BOTTOM PACKER AND ASSEMBLY	=	3.5	FT
	D - DISTANCE BETWEEN GROUND SURFACE AND TOP OF THE TEST ZONE	=	28	FT
	PIP - PACKER INFLATION PRESSURE (D PSI **+ 50 PSI**)	=	185	PSI
	H1- DISTANCE BETWEEN WATER PRESSURE GAUGE AND GROUND SURFACE	=	39.2	FT
	H2- DISTANCE BETWEEN GROUND SURFACE AND GROUND WATER TABLE	=	16.26	FT
	Q = VOL/TIME = (ΔH/Δt) * CONV FACTOR (0.653 GAL/FT)	=		GAL/MIN

GZA

BORING NO. /TEST NO. MW-40 T11

PACKER TEST LOG

GZA GEOENVIRONMENTAL OF NEW YORK 440 NINTH AVENUE, 18th FLOOR NEW YORK, NEW YORK 10001 SCIENTISTS AND ENGINEERS	Client Entergy Indian Point Energy Cente Buchanan, NY	BORING NO./TEST NO. MW-40 T12 SHEET 1 of 1 FILE NO. 41.0017869.01 PROJECT LOCATION Indian Point

CONTRACTOR	Aquifer Drilling & Testing, Inc.	BORING COORDINATES	N 461950.5094	E 603899.3458	
FOREMAN	Lloyd Adams	GROUND SURFACE EL.(FT)	74.987	DATUM	NGVD 29
GZA ENG.	Sara Covelli	FINAL BORING DEPTH (FT)	193	DATE START/END	5/16/06
DIAMETER OF DRILLED BOREHOLE	3.83 INCH	GROUND WATER DEPTH (STATIC WATER LEVEL DEPTH)	16.26 FT (from ground)		0.25 FT ground to casing
I.D. OF DRILLING RODS	2 INCH				

TESTED INTERVAL FROM / TO (FT)	TIME (HR:MIN:SEC)	ELAPSED TIME (Δt MIN)	DEPTH UNDER WATER (FT)	DEPTH TO WATER (FT)	DRAWDOWN (ΔH FT)	PUMPING RATE (gal/min)	SPECIFIC CAPACITY (Q/s)
18-28	10:57	0	10.390	18.81	2.55	1.667	0.654
L= 10.0 ft	10:58	1	10.376	18.82	2.564	1.667	0.650
	10:59	2	10.348	18.85	2.592	1.667	0.643
	11:00	3	10.319	18.88	2.621	1.667	0.636
	11:01	4	10.305	18.90	2.635	1.667	0.633
	11:02	5	10.276	18.92	2.664	1.667	0.626
	11:03	6	10.262	18.94	2.678	1.667	0.622
	11:04	7	10.276	18.92	2.664	1.667	0.626
	11:05	8	10.262	18.94	2.678	1.667	0.622
	11:06	9	10.233	18.97	2.707	1.667	0.616
	11:07	10	10.233	18.97	2.707	1.667	0.616
	11:08	11	10.233	18.97	2.707	1.667	0.616
	11:09	12	10.219	18.98	2.721	1.667	0.613
	11:10	13	10.204	19.00	2.736	1.667	0.609
	11:11	14	10.262	18.94	2.678	1.667	0.622
	11:12	15	10.233	18.97	2.707	1.667	0.616
	11:13	16	10.233	18.97	2.707	1.667	0.616
	11:14	17	10.204	19.00	2.736	1.667	0.609
	11:15	18	10.204	19.00	2.736	1.667	0.609
	11:16	19	10.190	19.01	2.75	1.667	0.606
	11:17	20	10.190	19.01	2.75	1.667	0.606
	11:18	21	10.161	19.04	2.779	1.667	0.600
	11:19	22	10.147	19.05	2.793	1.667	0.597
	11:20	23	10.176	19.02	2.764	1.667	0.603
	11:21	24	10.176	19.02	2.764	1.667	0.603
	11:22	25	10.176	19.02	2.764	1.667	0.603
	11:23	26	10.176	19.02	2.764	1.667	0.603

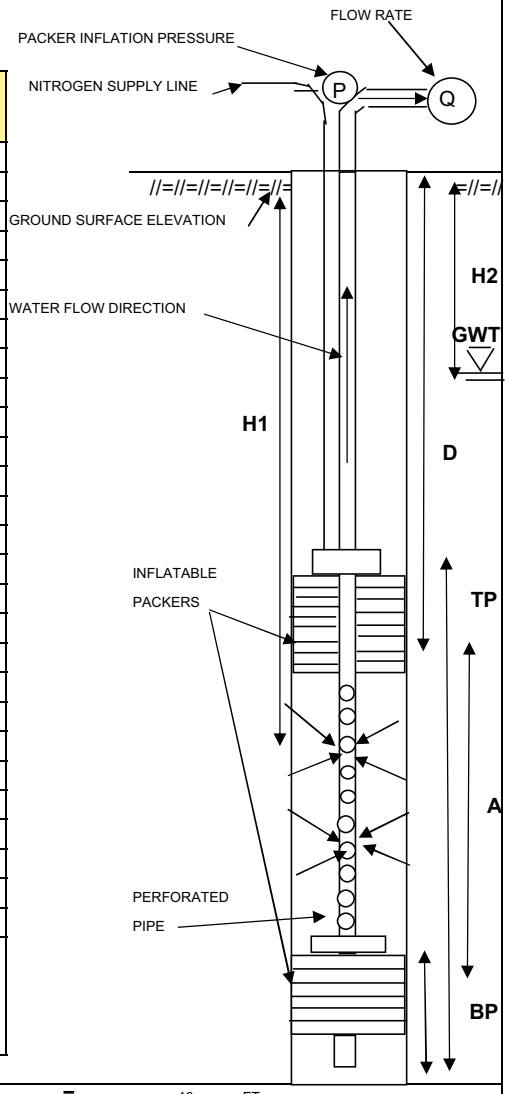

LEGEND:				
A - TOTAL LENGTH OF TEST SECTION (FT)	=	10	FT
TP - TOTAL LENGTH OF TOP PACKER AND ASSEMBLY	=	16.85	FT
BP - TOTAL LENGTH OF BOTTOM PACKER AND ASSEMBLY	=	3.5	FT
D - DISTANCE BETWEEN GROUND SURFACE AND TOP OF THE TEST ZONE	=	18	FT
PIP - PACKER INFLATION PRESSURE (D PSI + **50 PSI**)	=	185	PSI
H1- DISTANCE BETWEEN WATER PRESSURE GAUGE AND GROUND SURFACE	=	29.2	FT
H2- DISTANCE BETWEEN GROUND SURFACE AND GROUND WATER TABLE	=	16.26	FT
Q = VOL/TIME = (ΔH/Δt) * CONV FACTOR (0.653 GAL/FT)	=		GAL/MIN

GZA

BORING NO. /TEST NO. MW-40 T12

PACKER TEST LOG

GZA GEOENVIRONMENTAL OF NEW YORK 440 NINTH AVENUE, 18th FLOOR NEW YORK, NEW YORK 10001 SCIENTISTS AND ENGINEERS	Client Entergy Indian Point Energy Cente Buchanan, NY	BORING NO./TEST NO.	MW-51 T1
		SHEET	1 of 1
		FILE NO.	41.0017869.01
		PROJECT LOCATION	Indian Point

CONTRACTOR	Aquifer Drilling & Testing, Inc.	BORING COORDINATES	N 461.822.4272	E 604275.3373	
FOREMAN	Ed Borner	GROUND SURFACE EL.(FT)	69.62	DATUM	NGVD 29
GZA ENG.	Sara Covelli	FINAL BORING DEPTH (FT)	198.8	DATE START/END	5/18/06
DIAMETER OF DRILLED BOREHOLE	3.83 INCH	GROUND WATER DEPTH (STATIC WATER LEVEL DEPTH)	27.66 (from ground)	0.26 FT ground to casing	
I.D. OF DRILLING RODS	2 INCH				

TESTED INTERVAL FROM / TO (FT)	TIME (HR:MIN)	ELAPSED TIME (Δt MIN)	DEPTH UNDER WATER (FT)	DEPTH TO WATER (FT)	CUMULATIVE RECOVERY (ΔH FT)	RECOVERY RATE (ΔH/Δt)
184.6-194.3	10:17	0	150.494	45.31	0.00	-
L= 9.7 ft	10:18	1	151.630	44.17	1.14	2.27200
	10:19	2	152.708	43.09	2.21	1.10700
	10:20	3	153.715	42.09	3.22	1.07367
	10:21	4	154.664	41.14	4.17	1.04250
	10:22	5	155.556	40.24	5.06	1.01240
	10:23	6	156.405	39.40	5.91	0.98517
	10:24	7	157.210	38.59	6.72	0.95943
	10:25	8	157.973	37.83	7.48	0.93488
	10:26	9	158.692	37.11	8.20	0.91089
	10:27	10	159.368	36.43	8.87	0.88740
	10:28	11	160.001	35.80	9.51	0.86427
	10:29	12	160.591	35.21	10.10	0.84142
	10:30	13	161.152	34.65	10.66	0.81985
	10:31	14	161.670	34.13	11.18	0.79829
	10:32	15	162.159	33.64	11.67	0.77767
	10:33	16	162.605	33.20	12.11	0.75694
	10:34	17	163.037	32.76	12.54	0.73782
	10:35	18	163.440	32.36	12.95	0.71922
	10:36	19	163.814	31.99	13.32	0.70105
	10:37	20	164.145	31.66	13.65	0.68255
	10:38	21	164.476	31.32	13.98	0.66581
	10:39	22	164.778	31.02	14.28	0.64927
	10:40	23	165.051	30.75	14.56	0.63291
	10:41	24	165.310	30.49	14.82	0.61733
	10:42	25	165.540	30.26	15.05	0.60184
	10:47	30	166.476	29.32	15.98	0.53273
	10:52	35	167.094	28.71	16.60	0.47429
	10:57	40	167.526	28.27	17.03	0.42580
	11:02	45	167.785	28.02	17.29	0.38424

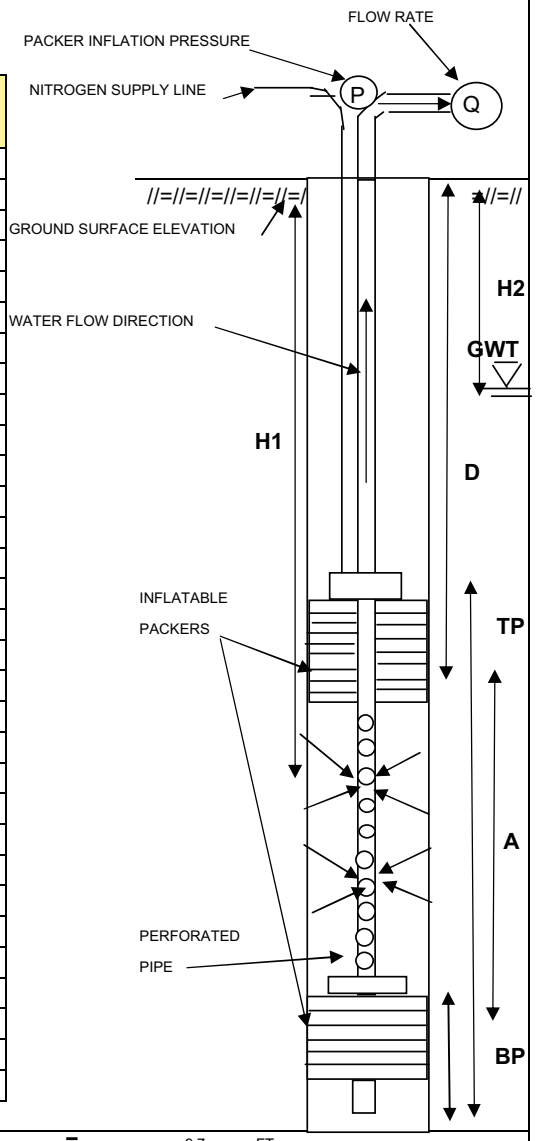

LEGEND:				
	A - TOTAL LENGTH OF TEST SECTION (FT)	=	9.7	FT
	TP - TOTAL LENGTH OF TOP PACKER AND ASSEMBLY	=	16.74	FT
	BP - TOTAL LENGTH OF BOTTOM PACKER AND ASSEMBLY	=	4.13	FT
	D - DISTANCE BETWEEN GROUND SURFACE AND TOP OF THE TEST ZONE	=	184.6	FT
	PIP - PACKER INFLATION PRESSURE (D PSI **+ 50 PSI**)	=	185	PSI
	H1- DISTANCE BETWEEN WATER PRESSURE GAUGE AND GROUND SURFACE	=	195.8	FT
	H2- DISTANCE BETWEEN GROUND SURFACE AND GROUND WATER TABLE	=	27.66	FT

GZA

BORING NO. /TEST NO. MW-51 T1

PACKER TEST LOG

GZA GEOENVIRONMENTAL OF NEW YORK 440 NINTH AVENUE, 18th FLOOR NEW YORK, NEW YORK 10001 SCIENTISTS AND ENGINEERS	Client Entergy Indian Point Energy Cente Buchanan, NY	BORING NO./TEST NO.	MW-51 T2
		SHEET	1 of 1
		FILE NO.	41.0017869.01
		PROJECT LOCATION	Indian Point

CONTRACTOR	Aquifer Drilling & Testing, Inc.	BORING COORDINATES	N 461.822.4272	E 604275.3373	
FOREMAN	Ed Borner	GROUND SURFACE EL.(FT)	69.62	DATUM	NGVD 29
GZA ENG.	Sara Covelli	FINAL BORING DEPTH (FT)	198.8	DATE START/END	5/18/06
DIAMETER OF DRILLED BOREHOLE	3.83 INCH	GROUND WATER DEPTH (STATIC WATER LEVEL DEPTH)	26.65	(from ground)	0.26 FT ground to casing
I.D. OF DRILLING RODS	2 INCH				

TESTED INTERVAL FROM / TO (FT)	TIME (HR:MIN)	ELAPSED TIME (Δt MIN)	DEPTH UNDER WATER (FT)	DEPTH TO WATER (FT)	CUMULATIVE RECOVERY (ΔH FT)	RECOVERY RATE (ΔH/Δt)
173.3-183.0	12:52	0	137.145	47.66	0.00	-
L= 9.7 ft	12:53	1	138.051	46.75	0.91	1.81200
	12:54	2	138.913	45.89	1.77	0.88400
	12:55	3	139.718	45.08	2.57	0.85767
	12:56	4	140.509	44.29	3.36	0.84100
	12:57	5	141.271	43.53	4.13	0.82520
	12:58	6	142.004	42.80	4.86	0.80983
	12:59	7	142.709	42.09	5.56	0.79486
	13:00	8	143.385	41.42	6.24	0.78000
	13:01	9	144.017	40.78	6.87	0.76356
	13:02	10	144.664	40.14	7.52	0.75190
	13:03	11	145.268	39.53	8.12	0.73845
	13:04	12	145.829	38.97	8.68	0.72367
	13:05	13	146.404	38.40	9.26	0.71223
	13:06	14	146.922	37.88	9.78	0.69836
	13:07	15	147.454	37.35	10.31	0.68727
	13:08	16	147.957	36.84	10.81	0.67575
	13:09	17	148.446	36.35	11.30	0.66476
	13:10	18	148.921	35.88	11.78	0.65422
	13:11	19	149.367	35.43	12.22	0.64326
	13:12	20	149.812	34.99	12.67	0.63335
	13:13	21	150.229	34.57	13.08	0.62305
	13:14	22	150.632	34.17	13.49	0.61305
	13:15	23	151.020	33.78	13.88	0.60326
	13:16	24	151.394	33.41	14.25	0.59371
	13:17	25	151.768	33.03	14.62	0.58492
	13:22	30	153.322	31.48	16.18	0.53923
	13:27	35	154.587	30.21	17.44	0.49834
	13:37	45	156.256	28.54	19.11	0.42469
	13:47	55	157.133	27.67	19.99	0.36342

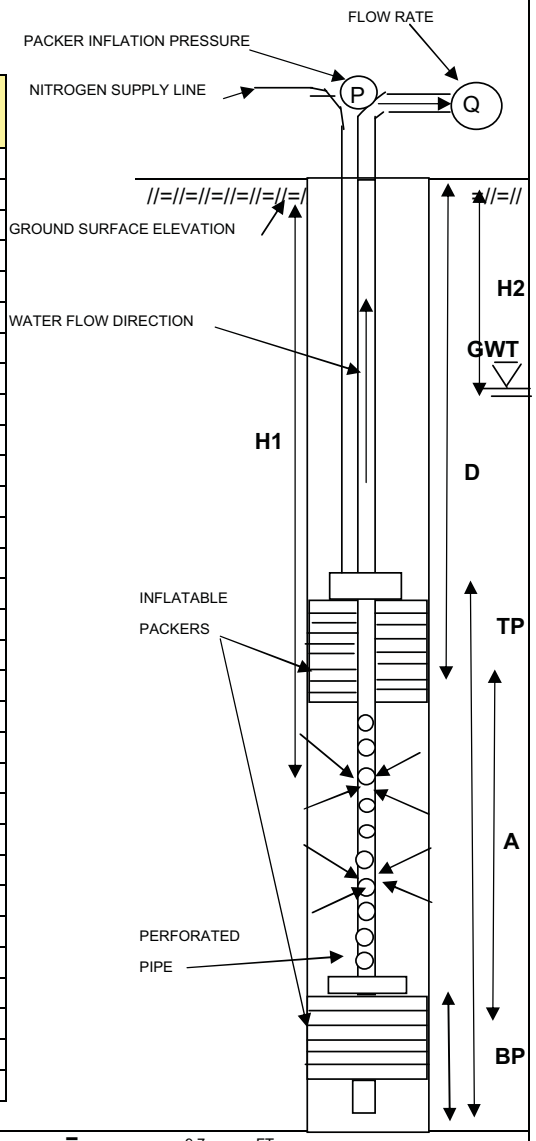

LEGEND:				
	A - TOTAL LENGTH OF TEST SECTION (FT)	=	9.7	FT
	TP - TOTAL LENGTH OF TOP PACKER AND ASSEMBLY	=	16.74	FT
	BP - TOTAL LENGTH OF BOTTOM PACKER AND ASSEMBLY	=	4.13	FT
	D - DISTANCE BETWEEN GROUND SURFACE AND TOP OF THE TEST ZONE	=	173.3	FT
	PIP - PACKER INFLATION PRESSURE (D PSI **+ 50 PSI**)	=	185	PSI
	H1- DISTANCE BETWEEN WATER PRESSURE GAUGE AND GROUND SURFACE	=	184.8	FT
	H2- DISTANCE BETWEEN GROUND SURFACE AND GROUND WATER TABLE	=	26.65	FT

GZA

BORING NO. /TEST NO. MW-51 T2

PACKER TEST LOG

GZA GEOENVIRONMENTAL OF NEW YORK 440 NINTH AVENUE, 18th FLOOR NEW YORK, NEW YORK 10001 SCIENTISTS AND ENGINEERS	Client Entergy Indian Point Energy Cente Buchanan, NY	BORING NO./TEST NO.	MW-51 T3
		SHEET	1 of 1
		FILE NO.	41.0017869.01
		PROJECT LOCATION	Indian Point

CONTRACTOR	Aquifer Drilling & Testing, Inc.	BORING COORDINATES	N 461.822.4272	E 604275.3373	
FOREMAN	Ed Borner	GROUND SURFACE EL.(FT)	69.62	DATUM	NGVD 29
GZA ENG.	Sara Covelli	FINAL BORING DEPTH (FT)	198.8	DATE START/END	5/18/06
DIAMETER OF DRILLED BOREHOLE	3.83 INCH	GROUND WATER DEPTH (STATIC WATER LEVEL DEPTH)	27.95 (from ground)	0.26 FT ground to casing	
I.D. OF DRILLING RODS	2 INCH				

TESTED INTERVAL FROM / TO (FT)	TIME (HR:MIN)	ELAPSED TIME (Δt MIN)	DEPTH UNDER WATER (FT)	DEPTH TO WATER (FT)	CUMULATIVE RECOVERY (ΔH FT)	RECOVERY RATE (ΔH/Δt)
157.8-167.5	14:37	0	118.779	50.22	0.00	-
L= 9.7 ft	14:38	1	119.756	49.24	0.98	1.95400
	14:39	2	120.705	48.30	1.93	0.96300
	14:$0	3	121.610	47.39	2.83	0.94367
	14:41	4	122.472	46.53	3.69	0.92325
	14:42	5	123.305	45.70	4.53	0.90520
	14:43	6	124.110	44.89	5.33	0.88850
	14:44	7	124.914	44.09	6.14	0.87643
	14:45	8	125.690	43.31	6.91	0.86388
	14:46	9	126.423	42.58	7.64	0.84933
	14:47	10	127.142	41.86	8.36	0.83630
	14:48	11	127.832	41.17	9.05	0.82300
	14:49	12	128.507	40.49	9.73	0.81067
	14:50	13	129.139	39.86	10.36	0.79692
	14:51	14	129.757	39.24	10.98	0.78414
	14:52	15	130.375	38.63	11.60	0.77307
	14:53	16	130.964	38.04	12.19	0.76156
	14:54	17	131.525	37.48	12.75	0.74976
	14:55	18	132.057	36.94	13.28	0.73767
	14:56	19	132.574	36.43	13.80	0.72605
	14:57	20	133.077	35.92	14.30	0.71490
	14:58	21	133.552	35.45	14.77	0.70348
	14:59	22	134.026	34.97	15.25	0.69305
	15:00	23	134.457	34.54	15.68	0.68165
	15:01	24	134.888	34.11	16.11	0.67121
	15:02	25	135.291	33.71	16.51	0.66048
	15:07	30	137.088	31.91	18.31	0.61030
	15:12	35	138.554	30.45	19.78	0.56500
	15:17	40	139.675	29.33	20.90	0.52240
	15:22	45	140.509	28.49	21.73	0.48289

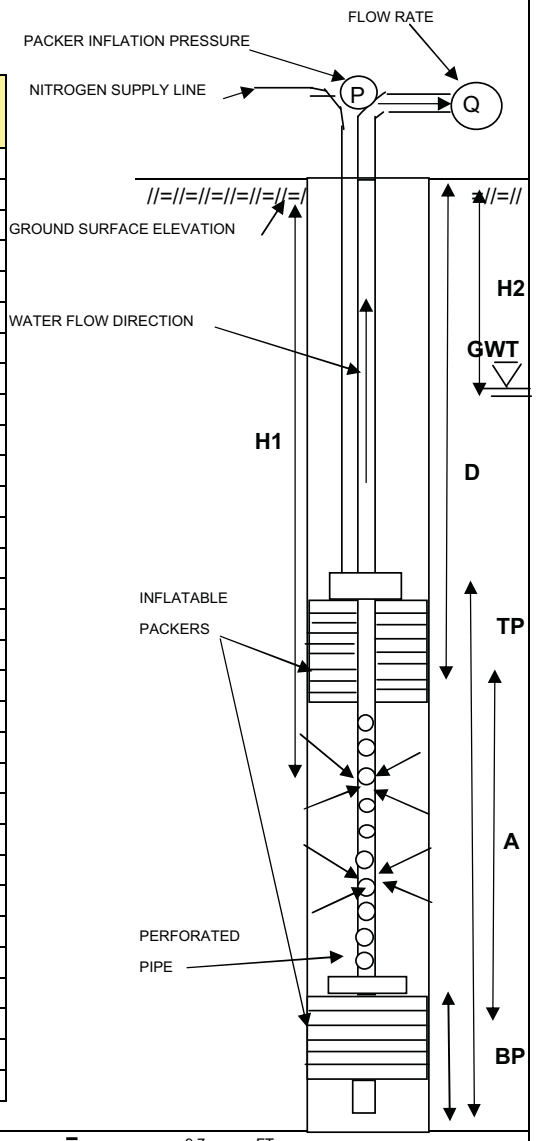

LEGEND:				
	A - TOTAL LENGTH OF TEST SECTION (FT)	=	9.7	FT
	TP - TOTAL LENGTH OF TOP PACKER AND ASSEMBLY	=	16.74	FT
	BP - TOTAL LENGTH OF BOTTOM PACKER AND ASSEMBLY	=	4.13	FT
	D - DISTANCE BETWEEN GROUND SURFACE AND TOP OF THE TEST ZONE	=	157.8	FT
	PIP - PACKER INFLATION PRESSURE (D PSI **+ 50 PSI**)	=	185	PSI
	H1- DISTANCE BETWEEN WATER PRESSURE GAUGE AND GROUND SURFACE	=	169	FT
	H2- DISTANCE BETWEEN GROUND SURFACE AND GROUND WATER TABLE	=	27.95	FT

GZA

BORING NO. /TEST NO. MW-51 T3

PACKER TEST LOG

GZA GEOENVIRONMENTAL OF NEW YORK 440 NINTH AVENUE, 18th FLOOR NEW YORK, NEW YORK 10001 SCIENTISTS AND ENGINEERS	Client Entergy Indian Point Energy Cente Buchanan, NY	BORING NO./TEST NO.	MW-51 T4
		SHEET	1 of 1
		FILE NO.	41.0017869.01
		PROJECT LOCATION	Indian Point

CONTRACTOR	Aquifer Drilling & Testing, Inc.	BORING COORDINATES	N 461.822.4272	E 604275.3373	
FOREMAN	Ed Borner	GROUND SURFACE EL.(FT)	69.62	DATUM	NGVD 29
GZA ENG.	Sara Covelli	FINAL BORING DEPTH (FT)	198.8	DATE START/END	5/19/06
DIAMETER OF DRILLED BOREHOLE	3.83 INCH	GROUND WATER DEPTH (STATIC WATER LEVEL DEPTH)	26.79	(from ground)	0.26 FT ground to casing
I.D. OF DRILLING RODS	2 INCH				

TESTED INTERVAL FROM / TO (FT)	TIME (HR:MIN)	ELAPSED TIME (Δt MIN)	DEPTH UNDER WATER (FT)	DEPTH TO WATER (FT)	CUMULATIVE RECOVERY (ΔH FT)	RECOVERY RATE (ΔH/Δt)
153.9-163.6	8:19	0	117.319	47.88	0.00	-
L= 9.7 ft	8:20	1	118.023	47.18	0.70	1.40800
	8:21	2	118.684	46.52	1.36	0.68250
	8:22	3	119.331	45.87	2.01	0.67067
	8:23	4	119.934	45.27	2.61	0.65375
	8:24	5	120.523	44.68	3.20	0.64080
	8:25	6	121.069	44.13	3.75	0.62500
	8:26	7	121.601	43.60	4.28	0.61171
	8:27	8	122.104	43.10	4.79	0.59813
	8:28	9	122.563	42.64	5.24	0.58267
	8:29	10	123.037	42.16	5.72	0.57180
	8:30	11	123.497	41.70	6.18	0.56164
	8:31	12	123.943	41.26	6.62	0.55200
	8:32	13	124.374	40.83	7.05	0.54269
	8:33	14	124.790	40.41	7.47	0.53364
	8:34	15	125.178	40.02	7.86	0.52393
	8:39	20	126.946	38.25	9.63	0.48135
	8:44	25	128.426	36.77	11.11	0.44428
	8:49	30	129.734	35.47	12.42	0.41383
	8:54	35	130.840	34.36	13.52	0.38631
	8:59	40	131.818	33.38	14.50	0.36248
	9:04	45	132.666	32.53	15.35	0.34104
	9:09	50	133.356	31.84	16.04	0.32074
	9:14	55	133.916	31.28	16.60	0.30176
	9:19	60	134.405	30.80	17.09	0.28477
	9:24	65	134.764	30.44	17.45	0.26838
	9:29	70	135.052	30.15	17.73	0.25333
	9:39	80	135.469	29.73	18.15	0.22688
	9:49	90	135.713	29.49	18.39	0.20438
	9:59	100	135.828	29.37	18.51	0.18509

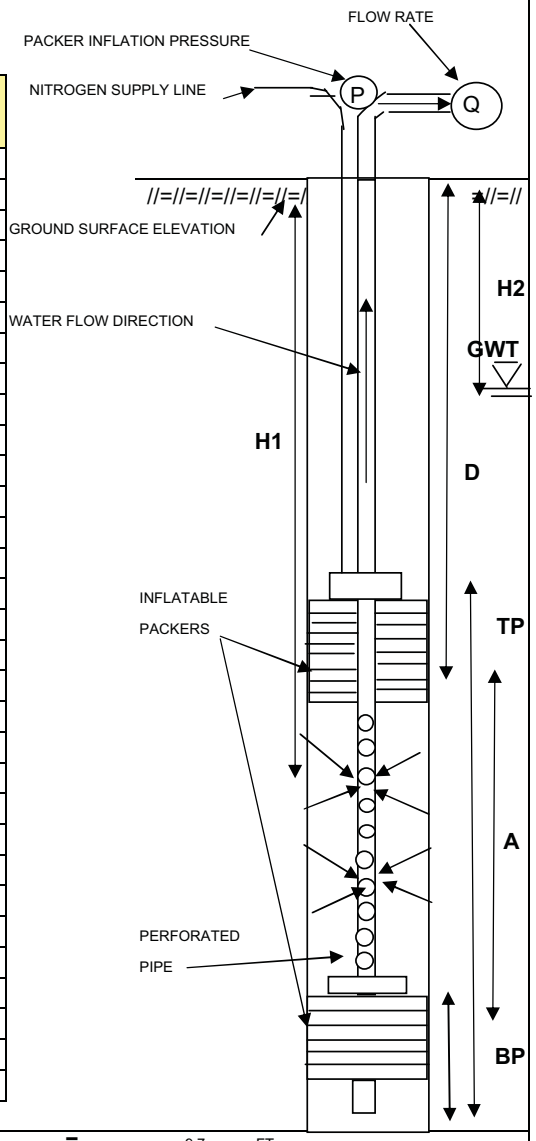

LEGEND:				
	A - TOTAL LENGTH OF TEST SECTION (FT)	=	9.7	FT
	TP - TOTAL LENGTH OF TOP PACKER AND ASSEMBLY	=	16.74	FT
	BP - TOTAL LENGTH OF BOTTOM PACKER AND ASSEMBLY	=	4.13	FT
	D - DISTANCE BETWEEN GROUND SURFACE AND TOP OF THE TEST ZONE	=	153.9	FT
	PIP - PACKER INFLATION PRESSURE (D PSI **+ 50 PSI**)	=	185	PSI
	H1- DISTANCE BETWEEN WATER PRESSURE GAUGE AND GROUND SURFACE	=	165.2	FT
	H2- DISTANCE BETWEEN GROUND SURFACE AND GROUND WATER TABLE	=	26.79	FT

GZA

BORING NO. /TEST NO. MW-51 T4

PACKER TEST LOG

GZA GEOENVIRONMENTAL OF NEW YORK 440 NINTH AVENUE, 18th FLOOR NEW YORK, NEW YORK 10001 SCIENTISTS AND ENGINEERS	Client Entergy Indian Point Energy Cente Buchanan, NY	BORING NO./TEST NO.	MW-51 T5
		SHEET	1 of 1
		FILE NO.	41.0017869.01
		PROJECT LOCATION	Indian Point

CONTRACTOR	Aquifer Drilling & Testing, Inc.	BORING COORDINATES	N 461.822.4272	E 604275.3373	
FOREMAN	Ed Borner	GROUND SURFACE EL.(FT)	69.62	DATUM	NGVD 29
GZA ENG.	Sara Covelli	FINAL BORING DEPTH (FT)	198.8	DATE START/END	5/19/06
DIAMETER OF DRILLED BOREHOLE	3.83 INCH	GROUND WATER DEPTH (STATIC WATER LEVEL DEPTH)	27.02 (from ground)	0.26 FT ground to casing	
I.D. OF DRILLING RODS	2 INCH				

TESTED INTERVAL FROM / TO (FT)	TIME (HR:MIN)	ELAPSED TIME (Δt MIN)	DEPTH UNDER WATER (FT)	DEPTH TO WATER (FT)	CUMULATIVE RECOVERY (ΔH FT)	RECOVERY RATE (ΔH/Δt)
143.4-153.1	11:12	0	106.274	48.33	0.00	-
L= 9.7 ft	11:13	1	106.949	47.65	0.67	1.35000
	11:14	2	107.538	47.06	1.26	0.63200
	11:15	3	108.070	46.53	1.80	0.59867
	11:16	4	108.587	46.01	2.31	0.57825
	11:17	5	109.075	45.53	2.80	0.56020
	11:18	6	109.506	45.09	3.23	0.53867
	11:19	7	109.908	44.69	3.63	0.51914
	11:20	8	110.281	44.32	4.01	0.50088
	11:21	9	110.626	43.97	4.35	0.48356
	11:22	10	110.971	43.63	4.70	0.46970
	11:23	11	111.315	43.29	5.04	0.45827
	11:24	12	111.646	42.95	5.37	0.44767
	11:25	13	111.947	42.65	5.67	0.43638
	11:26	14	112.263	42.34	5.99	0.42779
	11:27	15	112.565	42.04	6.29	0.41940
	11:32	20	113.944	40.66	7.67	0.38350
	11:37	25	115.179	39.42	8.91	0.35620
	11:42	30	116.271	38.33	10.00	0.33323
	11:47	35	117.276	37.32	11.00	0.31434
	11:52	40	118.167	36.43	11.89	0.29733
	11:57	45	118.943	35.66	12.67	0.28153
	12:02	50	119.647	34.95	13.37	0.26746
	12:07	55	120.279	34.32	14.01	0.25464
	12:17	65	121.241	33.36	14.97	0.23026
	12:27	75	121.960	32.64	15.69	0.20915
	12:37	85	122.563	32.04	16.29	0.19164
	12:47	95	123.052	31.55	16.78	0.17661
	12:57	105	123.497	31.10	17.22	0.16403
	13:07	115	123.842	30.76	17.57	0.15277

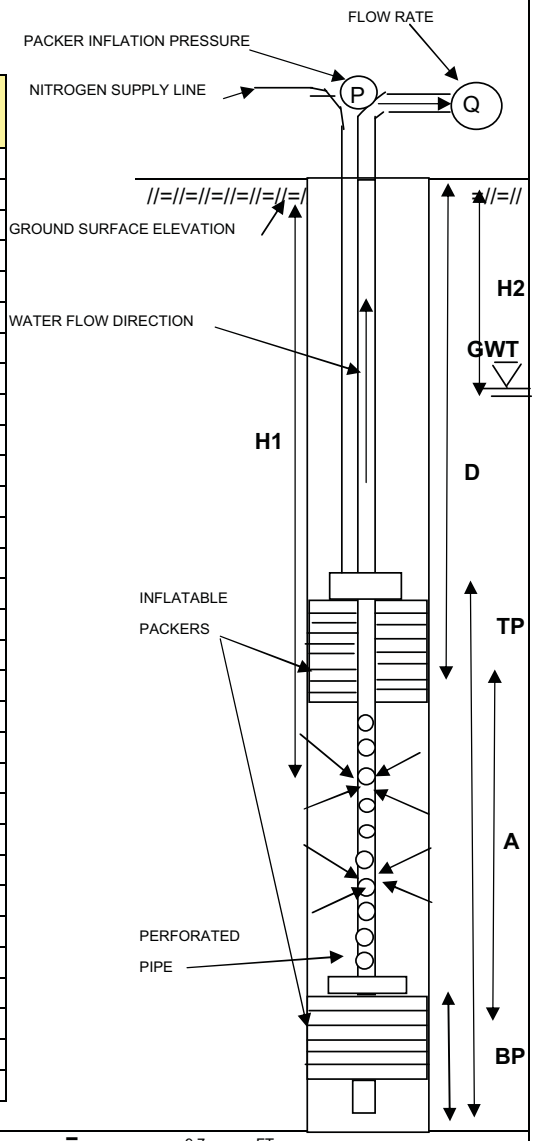

LEGEND:				
	A - TOTAL LENGTH OF TEST SECTION (FT)	=	9.7	FT
	TP - TOTAL LENGTH OF TOP PACKER AND ASSEMBLY	=	16.74	FT
	BP - TOTAL LENGTH OF BOTTOM PACKER AND ASSEMBLY	=	4.13	FT
	D - DISTANCE BETWEEN GROUND SURFACE AND TOP OF THE TEST ZONE	=	143.4	FT
	PIP - PACKER INFLATION PRESSURE (D PSI **+ 50 PSI**)	=	185	PSI
	H1- DISTANCE BETWEEN WATER PRESSURE GAUGE AND GROUND SURFACE	=	154.6	FT
	H2- DISTANCE BETWEEN GROUND SURFACE AND GROUND WATER TABLE	=	27.02	FT

GZA

BORING NO. /TEST NO. MW-51 T5

PACKER TEST LOG

GZA GEOENVIRONMENTAL OF NEW YORK 440 NINTH AVENUE, 18th FLOOR NEW YORK, NEW YORK 10001 SCIENTISTS AND ENGINEERS	Client Entergy Indian Point Energy Cente Buchanan, NY	BORING NO./TEST NO.	MW-51 T6
		SHEET	1 of 1
		FILE NO.	41.0017869.01
		PROJECT LOCATION	Indian Point

CONTRACTOR	Aquifer Drilling & Testing, Inc.	BORING COORDINATES	N 461.822.4272	E 604275.3373	
FOREMAN	Ed Borner	GROUND SURFACE EL.(FT)	69.62	DATUM	NGVD 29
GZA ENG.	Sara Covelli	FINAL BORING DEPTH (FT)	198.8	DATE START/END	5/19/06
DIAMETER OF DRILLED BOREHOLE	3.83 INCH	GROUND WATER DEPTH (STATIC WATER LEVEL DEPTH)	27.87	(from ground)	0.26 FT ground to casing
I.D. OF DRILLING RODS	2 INCH				

TESTED INTERVAL FROM / TO (FT)	TIME (HR:MIN)	ELAPSED TIME (Δt MIN)	DEPTH UNDER WATER (FT)	DEPTH TO WATER (FT)	CUMULATIVE RECOVERY (ΔH FT)	RECOVERY RATE (ΔH/Δt)
131.5-141.2	13:52	0	99.727	43.07	0.00	-
L= 9.7 ft	13:53	1	100.229	42.57	0.50	1.00400
	13:54	2	100.703	42.10	0.98	0.48800
	13:55	3	101.177	41.62	1.45	0.48333
	13:56	4	101.608	41.19	1.88	0.47025
	13:57	5	102.039	40.76	2.31	0.46240
	13:58	6	102.441	40.36	2.71	0.45233
	13:59	7	102.828	39.97	3.10	0.44300
	14:00	8	103.187	39.61	3.46	0.43250
	14:01	9	103.546	39.25	3.82	0.42433
	14:02	10	103.876	38.92	4.15	0.41490
	14:03	11	104.207	38.59	4.48	0.40727
	14:04	12	104.508	38.29	4.78	0.39842
	14:05	13	104.824	37.98	5.10	0.39208
	14:06	14	105.140	37.66	5.41	0.38664
	14:07	15	105.442	37.36	5.71	0.38100
	14:08	16	105.714	37.09	5.99	0.37419
	14:09	17	105.987	36.81	6.26	0.36824
	14:10	18	106.246	36.55	6.52	0.36217
	14:11	19	106.504	36.30	6.78	0.35668
	14:12	20	106.763	36.04	7.04	0.35180
	14:13	21	106.992	35.81	7.27	0.34595
	14:18	26	108.113	34.69	8.39	0.32254
	14:23	31	109.104	33.70	9.38	0.30248
	14:28	36	109.937	32.86	10.21	0.28361
	14:33	41	110.683	32.12	10.96	0.26722
	14:43	51	111.847	30.95	12.12	0.23765
	14:53	61	112.737	30.06	13.01	0.21328
	15:03	71	113.398	29.40	13.67	0.19255

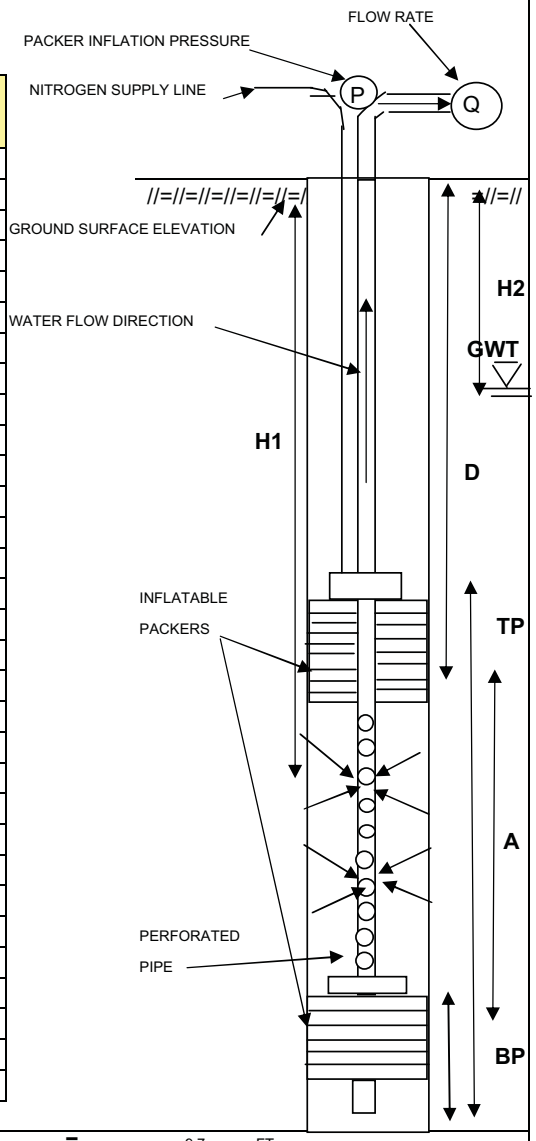

LEGEND:				
	A - TOTAL LENGTH OF TEST SECTION (FT)	=	9.7	FT
	TP - TOTAL LENGTH OF TOP PACKER AND ASSEMBLY	=	16.74	FT
	BP - TOTAL LENGTH OF BOTTOM PACKER AND ASSEMBLY	=	4.13	FT
	D - DISTANCE BETWEEN GROUND SURFACE AND TOP OF THE TEST ZONE	=	131.5	FT
	PIP - PACKER INFLATION PRESSURE (D PSI **+ 50 PSI**)	=	185	PSI
	H1- DISTANCE BETWEEN WATER PRESSURE GAUGE AND GROUND SURFACE	=	142.8	FT
	H2- DISTANCE BETWEEN GROUND SURFACE AND GROUND WATER TABLE	=	27.87	FT

GZA

BORING NO. /TEST NO. MW-51 T6

PACKER TEST LOG

GZA GEOENVIRONMENTAL OF NEW YORK 440 NINTH AVENUE, 18th FLOOR NEW YORK, NEW YORK 10001 SCIENTISTS AND ENGINEERS	Client Entergy Indian Point Energy Cente Buchanan, NY	BORING NO./TEST NO.	MW-51 T7
		SHEET	1 of 1
		FILE NO.	41.0017869.01
		PROJECT LOCATION	Indian Point

CONTRACTOR	Aquifer Drilling & Testing, Inc.	BORING COORDINATES	N 461.822.4272	E 604275.3373	
FOREMAN	Ed Borner	GROUND SURFACE EL.(FT)	69.62	DATUM	NGVD 29
GZA ENG.	Sara Covelli	FINAL BORING DEPTH (FT)	198.8	DATE START/END	5/22/06
DIAMETER OF DRILLED BOREHOLE	3.83 INCH	GROUND WATER DEPTH (STATIC WATER LEVEL DEPTH)	26.65 (from ground)	0.26 FT ground to casing	
I.D. OF DRILLING RODS	2 INCH				

TESTED INTERVAL FROM / TO (FT)	TIME (HR:MIN)	ELAPSED TIME (Δt MIN)	DEPTH UNDER WATER (FT)	DEPTH TO WATER (FT)	CUMULATIVE RECOVERY (ΔH FT)	RECOVERY RATE (ΔH/Δt)
120.4-130.1	8:35	0	86.235	45.27	0.00	-
L= 9.7 ft	8:36	1	86.665	44.84	0.43	0.86000
	8:37	2	87.024	44.48	0.79	0.39450
	8:38	3	87.340	44.16	1.11	0.36833
	8:39	4	87.655	43.85	1.42	0.35500
	8:40	5	87.957	43.54	1.72	0.34440
	8:41	6	88.201	43.30	1.97	0.32767
	8:42	7	88.445	43.06	2.21	0.31571
	8:43	8	88.674	42.83	2.44	0.30488
	8:44	9	88.904	42.60	2.67	0.29656
	8:45	10	89.119	42.38	2.88	0.28840
	8:46	11	89.320	42.18	3.08	0.28045
	8:47	12	89.535	41.97	3.30	0.27500
	8:49	13	89.722	41.78	3.49	0.26823
	8:50	14	89.909	41.59	3.67	0.26243
	8:51	15	90.296	41.20	4.06	0.27073
	8:56	20	91.215	40.29	4.98	0.24900
	9:01	25	92.090	39.41	5.86	0.23420
	9:06	30	92.880	38.62	6.65	0.22150
	9:11	35	93.655	37.85	7.42	0.21200
	9:16	40	94.372	37.13	8.14	0.20343
	9:26	50	95.693	35.81	9.46	0.18916
	9:36	60	96.884	34.62	10.65	0.17748
	9:46	70	97.932	33.57	11.70	0.16710
	9:56	80	98.851	32.65	12.62	0.15770
	10:06	90	99.670	31.83	13.44	0.14928
	10:16	100	100.387	31.11	14.15	0.14152
	10:26	110	101.005	30.50	14.77	0.13427
	10:36	120	101.565	29.94	15.33	0.12775
	10:46	130	102.053	29.45	15.82	0.12168

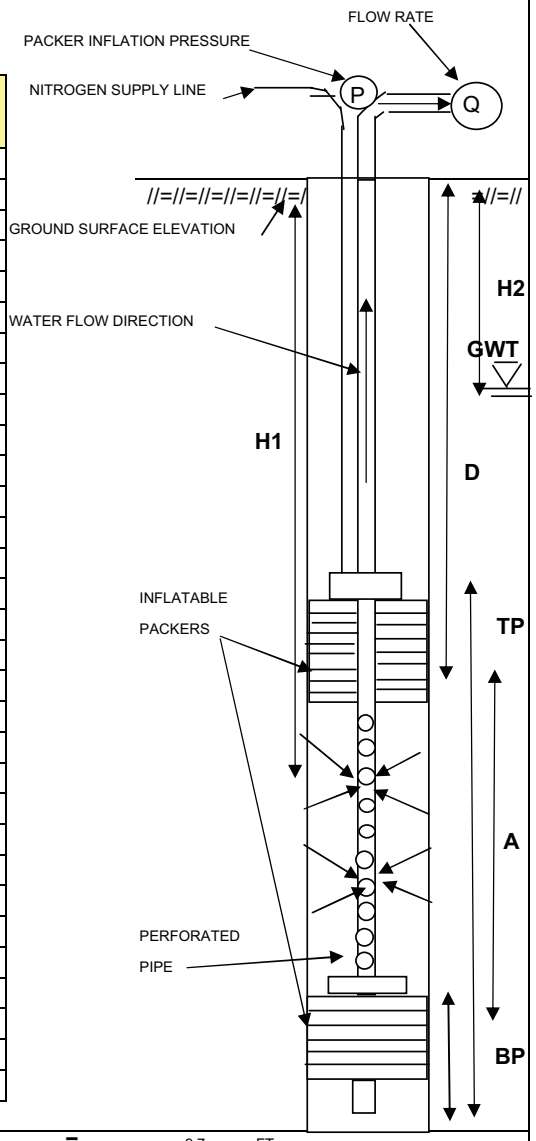

LEGEND:				
	A - TOTAL LENGTH OF TEST SECTION (FT)	=	9.7	FT
	TP - TOTAL LENGTH OF TOP PACKER AND ASSEMBLY	=	16.74	FT
	BP - TOTAL LENGTH OF BOTTOM PACKER AND ASSEMBLY	=	4.13	FT
	D - DISTANCE BETWEEN GROUND SURFACE AND TOP OF THE TEST ZONE	=	120.4	FT
	PIP - PACKER INFLATION PRESSURE (D PSI **+ 50 PSI**)	=	175	PSI
	H1- DISTANCE BETWEEN WATER PRESSURE GAUGE AND GROUND SURFACE	=	131.5	FT
	H2- DISTANCE BETWEEN GROUND SURFACE AND GROUND WATER TABLE	=	26.65	FT

GZA

BORING NO. /TEST NO. MW-51 T7

PACKER TEST LOG

GZA GEOENVIRONMENTAL OF NEW YORK 440 NINTH AVENUE, 18th FLOOR NEW YORK, NEW YORK 10001 SCIENTISTS AND ENGINEERS	Client Entergy Indian Point Energy Cente Buchanan, NY	BORING NO./TEST NO.	MW-51 T8
		SHEET	1 of 1
		FILE NO.	41.0017869.01
		PROJECT LOCATION	Indian Point

CONTRACTOR	Aquifer Drilling & Testing, Inc.	BORING COORDINATES	N 461.822.4272	E 604275.3373	
FOREMAN	Ed Borner	GROUND SURFACE EL.(FT)	69.62	DATUM	NGVD 29
GZA ENG.	Sara Covelli	FINAL BORING DEPTH (FT)	198.8	DATE START/END	5/22/06
DIAMETER OF DRILLED BOREHOLE	3.83 INCH	GROUND WATER DEPTH (STATIC WATER LEVEL DEPTH)	27.80 (from ground)	0.26 FT ground to casing	
I.D. OF DRILLING RODS	2 INCH				

TESTED INTERVAL FROM / TO (FT)	TIME (HR:MIN)	ELAPSED TIME (Δt MIN)	DEPTH UNDER WATER (FT)	DEPTH TO WATER (FT)	CUMULATIVE RECOVERY (ΔH FT)	RECOVERY RATE (ΔH/Δt)
109.3-119.0	12:24	0	72.347	47.95	0.00	-
L= 9.7 ft	12:25	1	76.134	44.17	3.79	7.57400
	12:26	2	79.433	40.87	7.09	3.54300
	12:27	3	81.672	38.63	9.33	3.10833
	12:28	4	83.322	36.98	10.98	2.74375
	12:29	5	84.584	35.72	12.24	2.44740
	12:30	6	85.546	34.75	13.20	2.19983
	12:31	7	86.278	34.02	13.93	1.99014
	12:32	8	86.895	33.41	14.55	1.81850
	12:33	9	87.397	32.90	15.05	1.67222
	12:34	10	87.828	32.47	15.48	1.54810
	12:35	11	88.186	32.11	15.84	1.43991
	12:36	12	88.502	31.80	16.16	1.34625
	12:37	13	88.760	31.54	16.41	1.26254
	12:38	14	88.990	31.31	16.64	1.18879
	12:39	15	89.177	31.12	16.83	1.12200
	12:40	16	89.349	30.95	17.00	1.06263
	12:41	17	89.507	30.79	17.16	1.00941
	12:42	18	89.621	30.68	17.27	0.95967
	12:43	19	89.751	30.55	17.40	0.91600
	12:44	20	89.865	30.44	17.52	0.87590
	12:45	21	89.937	30.36	17.59	0.83762
	12:46	22	90.009	30.29	17.66	0.80282
	12:47	23	90.095	30.21	17.75	0.77165
	12:48	24	90.167	30.13	17.82	0.74250
	12:49	25	90.224	30.08	17.88	0.71508
	12:54	30	90.440	29.86	18.09	0.60310
	12:59	35	90.597	29.70	18.25	0.52143
	13:04	40	90.712	29.59	18.37	0.45913
	13:09	45	90.784	29.52	18.44	0.40971

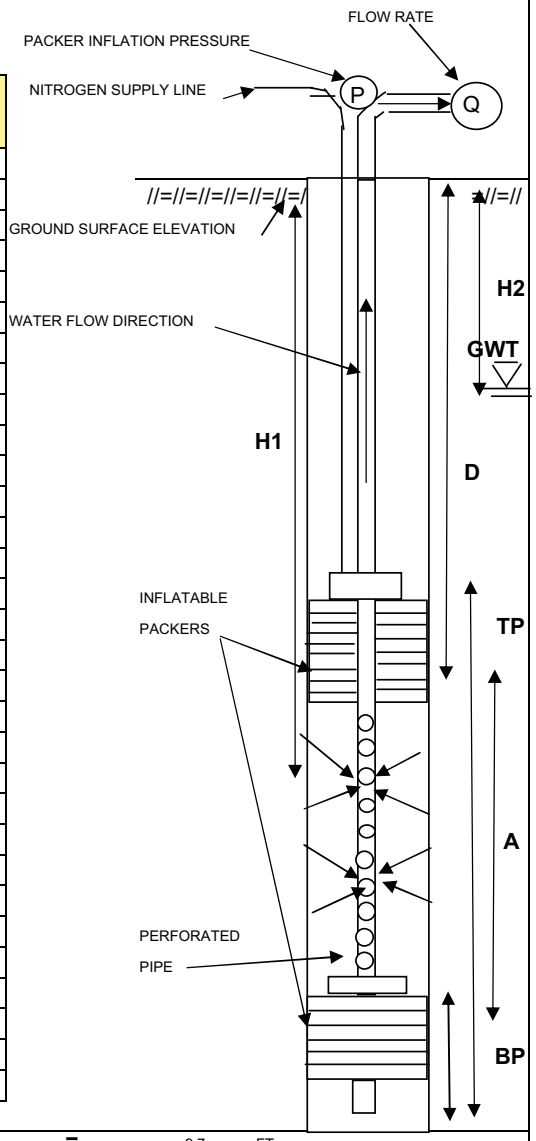

LEGEND:				
	A - TOTAL LENGTH OF TEST SECTION (FT)	=	9.7	FT
	TP - TOTAL LENGTH OF TOP PACKER AND ASSEMBLY	=	16.74	FT
	BP - TOTAL LENGTH OF BOTTOM PACKER AND ASSEMBLY	=	4.13	FT
	D - DISTANCE BETWEEN GROUND SURFACE AND TOP OF THE TEST ZONE	=	109.3	FT
	PIP - PACKER INFLATION PRESSURE (D PSI **+ 50 PSI**)	=	160	PSI
	H1- DISTANCE BETWEEN WATER PRESSURE GAUGE AND GROUND SURFACE	=	120.3	FT
	H2- DISTANCE BETWEEN GROUND SURFACE AND GROUND WATER TABLE	=	27.80	FT

GZA

BORING NO. /TEST NO. MW-51 T8

PACKER TEST LOG

GZA GEOENVIRONMENTAL OF NEW YORK 440 NINTH AVENUE, 18th FLOOR NEW YORK, NEW YORK 10001 SCIENTISTS AND ENGINEERS	Client Entergy Indian Point Energy Cente Buchanan, NY	BORING NO./TEST NO.	MW-51 T9
		SHEET	1 of 1
		FILE NO.	41.0017869.01
		PROJECT LOCATION	Indian Point

CONTRACTOR	Aquifer Drilling & Testing, Inc.	BORING COORDINATES	N 461.822.4272	E 604275.3373	
FOREMAN	Ed Borner	GROUND SURFACE EL.(FT)	69.62	DATUM	NGVD 29
GZA ENG.	Sara Covelli	FINAL BORING DEPTH (FT)	198.8	DATE START/END	5/22/06
DIAMETER OF DRILLED BOREHOLE	3.83 INCH	GROUND WATER DEPTH (STATIC WATER LEVEL DEPTH)	27.41	(from ground)	0.26 FT ground to casing
I.D. OF DRILLING RODS	2 INCH				

TESTED INTERVAL FROM / TO (FT)	TIME (HR:MIN)	ELAPSED TIME (Δt MIN)	DEPTH UNDER WATER (FT)	DEPTH TO WATER (FT)	CUMULATIVE RECOVERY (ΔH FT)	RECOVERY RATE (ΔH/Δt)
100.0-109.7	14:09	0	73.552	37.55	0.00	-
L= 9.7 ft	14:10	1	74.269	36.83	0.72	1.43400
	14:11	2	74.857	36.24	1.30	0.65250
	14:12	3	75.474	35.63	1.92	0.64067
	14:13	4	76.019	35.08	2.47	0.61675
	14:14	5	76.535	34.57	2.98	0.59660
	14:15	6	77.009	34.09	3.46	0.57617
	14:16	7	77.453	33.65	3.90	0.55729
	14:17	8	77.841	33.26	4.29	0.53612
	14:18	9	78.243	32.86	4.69	0.52122
	14:19	10	78.587	32.51	5.04	0.50350
	14:20	11	78.931	32.17	5.38	0.48900
	14:21	12	79.218	31.88	5.67	0.47217
	14:22	13	79.491	31.61	5.94	0.45685
	14:23	14	79.749	31.35	6.20	0.44264
	14:24	15	79.979	31.12	6.43	0.42847
	14:25	16	80.208	30.89	6.66	0.41600
	14:26	17	80.409	30.69	6.86	0.40335
	14:27	18	80.610	30.49	7.06	0.39211
	14:28	19	80.768	30.33	7.22	0.37979
	14:29	20	80.925	30.18	7.37	0.36865
	14:30	21	81.083	30.02	7.53	0.35862
	14:31	22	81.212	29.89	7.66	0.34818
	14:32	23	81.356	29.74	7.80	0.33930
	14:33	24	81.471	29.63	7.92	0.32996
	14:34	25	81.585	29.52	8.03	0.32132
	14:35	30	81.672	29.43	8.12	0.27067
	14:40	35	82.102	29.00	8.55	0.24429
	14:45	40	82.403	28.70	8.85	0.22128
	14:50	45	82.604	28.50	9.05	0.20116

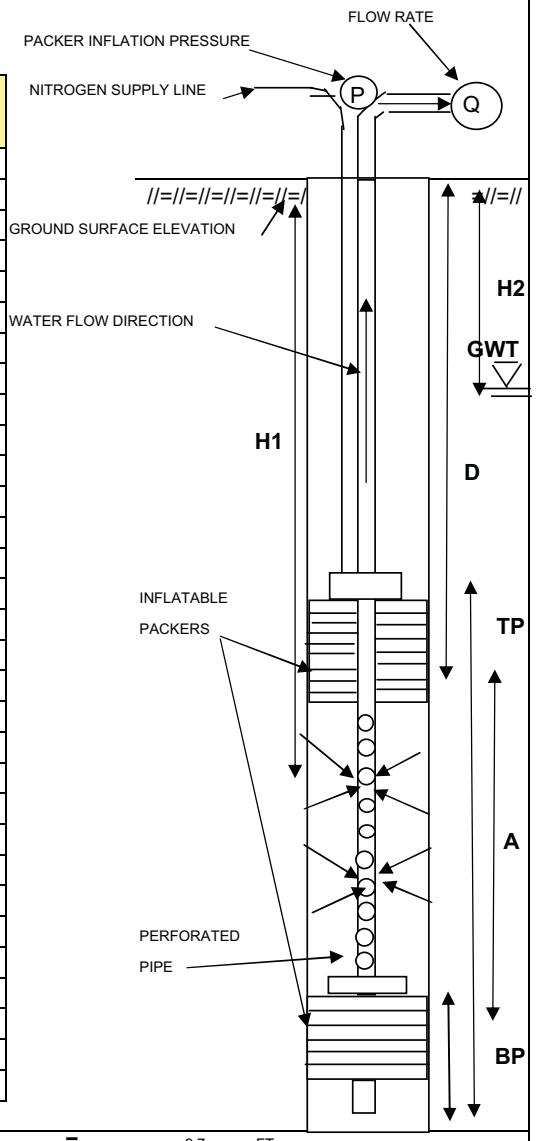

LEGEND:				
	A - TOTAL LENGTH OF TEST SECTION (FT)	=	9.7	FT
	TP - TOTAL LENGTH OF TOP PACKER AND ASSEMBLY	=	16.74	FT
	BP - TOTAL LENGTH OF BOTTOM PACKER AND ASSEMBLY	=	4.13	FT
	D - DISTANCE BETWEEN GROUND SURFACE AND TOP OF THE TEST ZONE	=	100.0	FT
	PIP - PACKER INFLATION PRESSURE (D PSI **+ 50 PSI**)	=	160	PSI
	H1- DISTANCE BETWEEN WATER PRESSURE GAUGE AND GROUND SURFACE	=	111.1	FT
	H2- DISTANCE BETWEEN GROUND SURFACE AND GROUND WATER TABLE	=	27.41	FT

GZA

BORING NO. /TEST NO. MW-51 T9

PACKER TEST LOG

GZA GEOENVIRONMENTAL OF NEW YORK 440 NINTH AVENUE, 18th FLOOR NEW YORK, NEW YORK 10001 SCIENTISTS AND ENGINEERS	Client Entergy Indian Point Energy Cente Buchanan, NY	BORING NO./TEST NO.	MW-51 T10
		SHEET	1 of 1
		FILE NO.	41.0017869.01
		PROJECT LOCATION	Indian Point

CONTRACTOR	Aquifer Drilling & Testing, Inc.	BORING COORDINATES	N 461.822.4272	E 604275.3373	
FOREMAN	Ed Borner	GROUND SURFACE EL.(FT)	69.62	DATUM	NGVD 29
GZA ENG.	Sara Covelli	FINAL BORING DEPTH (FT)	198.8	DATE START/END	5/23/06
DIAMETER OF DRILLED BOREHOLE	3.83 INCH	GROUND WATER DEPTH (STATIC WATER LEVEL DEPTH)	26.82	(from ground)	0.26 FT ground to casing
I.D. OF DRILLING RODS	2 INCH				

TESTED INTERVAL FROM / TO (FT)	TIME (HR:MIN)	ELAPSED TIME (Δt MIN)	DEPTH UNDER WATER (FT)	DEPTH TO WATER (FT)	CUMULATIVE RECOVERY (ΔH FT)	RECOVERY RATE (ΔH/Δt)
88.8-98.5	8:32	0	58.451	41.65	0.00	-
L= 9.7 ft	8:33	1	59.555	40.55	1.10	2.20800
	8:34	2	60.544	39.56	2.09	1.04650
	8:35	3	61.476	38.62	3.03	1.00833
	8:36	4	62.322	37.78	3.87	0.96775
	8:37	5	63.111	36.99	4.66	0.93200
	8:38	6	63.857	36.24	5.41	0.90100
	8:39	7	64.559	35.54	6.11	0.87257
	8:40	8	65.190	34.91	6.74	0.84238
	8:41	9	65.792	34.31	7.34	0.81567
	8:42	10	66.395	33.71	7.94	0.79440
	8:43	11	66.940	33.16	8.49	0.77173
	8:44	12	67.442	32.66	8.99	0.74925
	8:45	13	67.929	32.17	9.48	0.72908
	8:46	14	68.374	31.73	9.92	0.70879
	8:47	15	68.790	31.31	10.34	0.68927
	8:48	16	69.191	30.91	10.74	0.67125
	8:49	17	69.564	30.54	11.11	0.65371
	8:50	18	69.923	30.18	11.47	0.63733
	8:51	19	70.253	29.85	11.80	0.62116
	8:52	20	70.568	29.53	12.12	0.60585
	8:53	21	70.841	29.26	12.39	0.59000
	8:54	22	71.113	28.99	12.66	0.57555
	8:55	23	71.357	28.74	12.91	0.56113
	8:56	24	71.572	28.53	13.12	0.54671
	8:57	25	71.854	28.25	13.40	0.53612
	9:02	30	72.763	27.34	14.31	0.47707
	9:07	35	73.423	26.68	14.97	0.42777
	9:12	40	73.910	26.19	15.46	0.38648
	9:17	45	74.283	25.82	15.83	0.35182

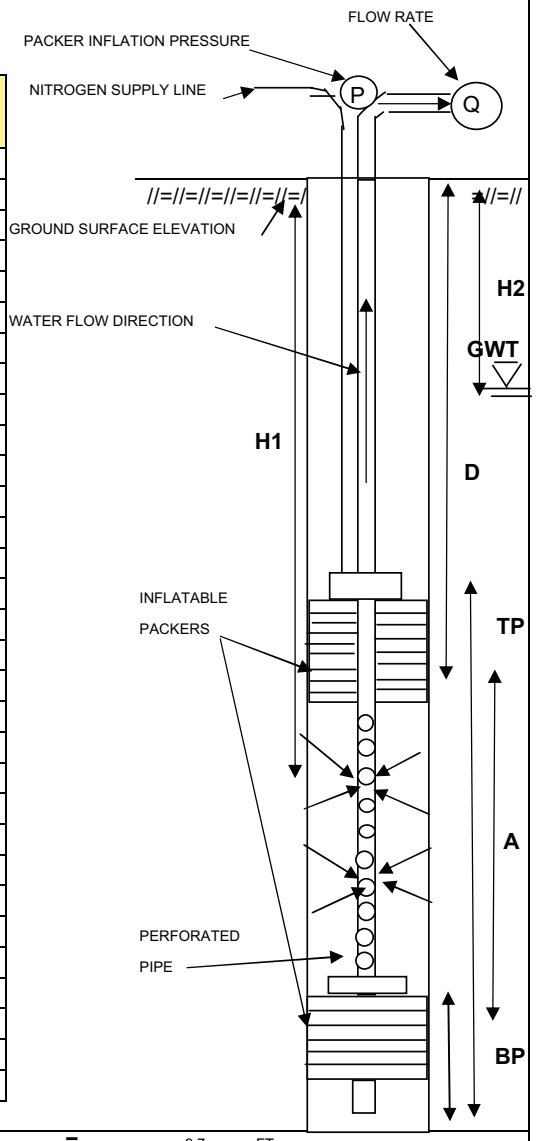

LEGEND:				
	A - TOTAL LENGTH OF TEST SECTION (FT)	=	9.7	FT
	TP - TOTAL LENGTH OF TOP PACKER AND ASSEMBLY	=	16.74	FT
	BP - TOTAL LENGTH OF BOTTOM PACKER AND ASSEMBLY	=	4.13	FT
	D - DISTANCE BETWEEN GROUND SURFACE AND TOP OF THE TEST ZONE	=	88.8	FT
	PIP - PACKER INFLATION PRESSURE (D PSI **+ 50 PSI**)	=	165	PSI
	H1- DISTANCE BETWEEN WATER PRESSURE GAUGE AND GROUND SURFACE	=	100.1	FT
	H2- DISTANCE BETWEEN GROUND SURFACE AND GROUND WATER TABLE	=	26.82	FT

GZA

BORING NO. /TEST NO. MW-51 T10

PACKER TEST LOG

GZA GEOENVIRONMENTAL OF NEW YORK 440 NINTH AVENUE, 18th FLOOR NEW YORK, NEW YORK 10001 SCIENTISTS AND ENGINEERS	Client Entergy Indian Point Energy Cente Buchanan, NY	BORING NO./TEST NO.	MW-51 T11
		SHEET	1 of 1
		FILE NO.	41.0017869.01
		PROJECT LOCATION	Indian Point

CONTRACTOR	Aquifer Drilling & Testing, Inc.	BORING COORDINATES	N 461.822.4272	E 604275.3373	
FOREMAN	Ed Borner	GROUND SURFACE EL.(FT)	69.62	DATUM	NGVD 29
GZA ENG.	Sara Covelli	FINAL BORING DEPTH (FT)	198.8	DATE START/END	5/23/06
DIAMETER OF DRILLED BOREHOLE	3.83 INCH	GROUND WATER DEPTH (STATIC WATER LEVEL DEPTH)	26.95	(from ground)	0.26 FT ground to casing
I.D. OF DRILLING RODS	2 INCH				

TESTED INTERVAL FROM / TO (FT)	TIME (HR:MIN)	ELAPSED TIME (Δt MIN)	DEPTH UNDER WATER (FT)	DEPTH TO WATER (FT)	CUMULATIVE RECOVERY (ΔH FT)	RECOVERY RATE (ΔH/Δt)
77.8-87.5	10:22	0	41.796	57.10	0.00	-
L= 9.7 ft	10:23	1	42.269	56.63	0.47	0.94600
	10:24	2	42.699	56.20	0.90	0.45150
	10:25	3	43.158	55.74	1.36	0.45400
	10:26	4	43.559	55.34	1.76	0.44075
	10:27	5	43.975	54.93	2.18	0.43580
	10:28	6	44.390	54.51	2.59	0.43233
	10:29	7	44.791	54.11	3.00	0.42786
	10:30	8	45.178	53.72	3.38	0.42275
	10:31	9	45.594	53.31	3.80	0.42200
	10:32	10	45.981	52.92	4.19	0.41850
	10:33	11	46.368	52.53	4.57	0.41564
	10:34	12	46.755	52.15	4.96	0.41325
	10:35	13	47.113	51.79	5.32	0.40900
	10:36	14	47.471	51.43	5.68	0.40536
	10:37	15	47.815	51.09	6.02	0.40127
	10:42	20	49.463	49.44	7.67	0.38335
	10:47	25	50.983	47.92	9.19	0.36748
	10:52	30	52.330	46.57	10.53	0.35113
	10:57	35	53.563	45.34	11.77	0.33620
	11:02	40	54.652	44.25	12.86	0.32140
	11:07	45	55.613	43.29	13.82	0.30704
	11:12	50	56.444	42.46	14.65	0.29296
	11:22	60	57.835	41.07	16.04	0.26732
	11:32	70	58.881	40.02	17.09	0.24407
	11:42	80	59.684	39.22	17.89	0.22360
	11:52	90	60.286	38.61	18.49	0.20544
	12:02	100	60.731	38.17	18.94	0.18935
	12:12	110	61.061	37.84	19.27	0.17514

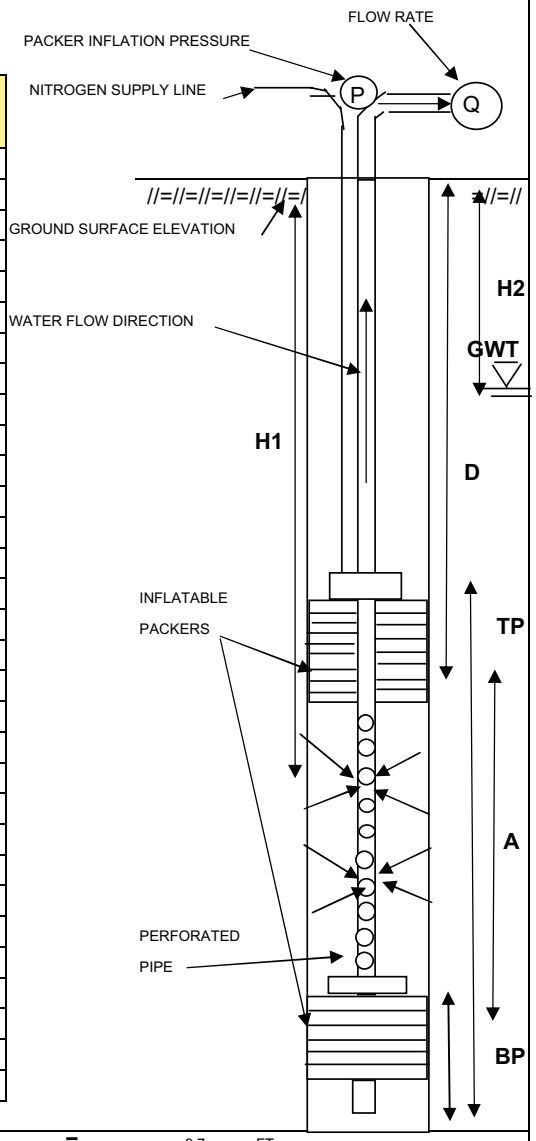

LEGEND:				
	A - TOTAL LENGTH OF TEST SECTION (FT)	=	9.7	FT
	TP - TOTAL LENGTH OF TOP PACKER AND ASSEMBLY	=	16.74	FT
	BP - TOTAL LENGTH OF BOTTOM PACKER AND ASSEMBLY	=	4.13	FT
	D - DISTANCE BETWEEN GROUND SURFACE AND TOP OF THE TEST ZONE	=	77.8	FT
	PIP - PACKER INFLATION PRESSURE (D PSI **+ 50 PSI**)	=	165	PSI
	H1- DISTANCE BETWEEN WATER PRESSURE GAUGE AND GROUND SURFACE	=	98.9	FT
	H2- DISTANCE BETWEEN GROUND SURFACE AND GROUND WATER TABLE	=	26.95	FT

GZA

BORING NO. /TEST NO. MW-51 T11

PACKER TEST LOG

GZA GEOENVIRONMENTAL OF NEW YORK 440 NINTH AVENUE, 18th FLOOR NEW YORK, NEW YORK 10001 SCIENTISTS AND ENGINEERS	Client Entergy Indian Point Energy Cente Buchanan, NY	BORING NO./TEST NO.	MW-51 T12
		SHEET	1 of 1
		FILE NO.	41.0017869.01
		PROJECT LOCATION	Indian Point

CONTRACTOR	Aquifer Drilling & Testing, Inc.	BORING COORDINATES	N 461.822.4272	E 604275.3373	
FOREMAN	Ed Borner	GROUND SURFACE EL.(FT)	69.62	DATUM	NGVD 29
GZA ENG.	Sara Covelli	FINAL BORING DEPTH (FT)	198.8	DATE START/END	5/23/06
DIAMETER OF DRILLED BOREHOLE	3.83 INCH	GROUND WATER DEPTH (STATIC WATER LEVEL DEPTH)	27.47 (from ground)	0.26 FT ground to casing	
I.D. OF DRILLING RODS	2 INCH				

TESTED INTERVAL FROM / TO (FT)	TIME (HR:MIN)	ELAPSED TIME (Δt MIN)	DEPTH UNDER WATER (FT)	DEPTH TO WATER (FT)	CUMULATIVE RECOVERY (ΔH FT)	RECOVERY RATE (ΔH/Δt)
65.0-74.7	13:01	0	27.772	48.53	0.00	-
L= 9.7 ft	13:02	1	28.144	48.16	0.37	0.74400
	13:03	2	28.531	47.77	0.76	0.37950
	13:04	3	28.903	47.40	1.13	0.37700
	13:05	4	29.276	47.02	1.50	0.37600
	13:06	5	29.620	46.68	1.85	0.36960
	13:07	6	29.992	46.31	2.22	0.37000
	13:08	7	30.321	45.98	2.55	0.36414
	13:09	8	30.651	45.65	2.88	0.35988
	13:10	9	30.995	45.31	3.22	0.35811
	13:11	10	31.324	44.98	3.55	0.35520
	13:12	11	31.639	44.66	3.87	0.35155
	13:13	12	31.983	44.32	4.21	0.35092
	13:14	13	32.312	43.99	4.54	0.34923
	13:15	14	32.656	43.64	4.88	0.34886
	13:16	15	33.000	43.30	5.23	0.34853
	13:17	20	33.301	43.00	5.53	0.27645
	13:18	21	33.630	42.67	5.86	0.27895
	13:19	22	33.974	42.33	6.20	0.28191
	13:20	23	34.289	42.01	6.52	0.28335
	13:21	24	34.590	41.71	6.82	0.28408
	13:22	25	34.905	41.40	7.13	0.28532
	13:27	30	36.424	39.88	8.65	0.28840
	13:32	35	37.828	38.47	10.06	0.28731
	13:37	40	39.160	37.14	11.39	0.28470
	13:42	45	40.392	35.91	12.62	0.28044
	13:47	50	41.553	34.75	13.78	0.27562
	13:52	55	42.599	33.70	14.83	0.26958
	13:59	60	43.975	32.33	16.20	0.27005
	14:09	70	45.637	30.66	17.87	0.25521
	14:19	80	47.070	29.23	19.30	0.24123

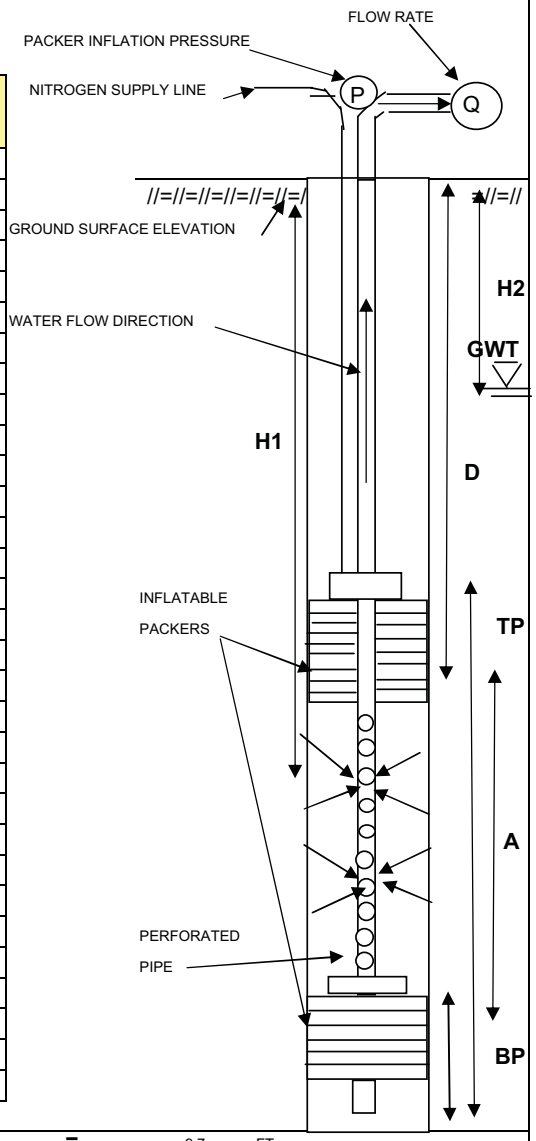

LEGEND:				
	A - TOTAL LENGTH OF TEST SECTION (FT)	=	9.7	FT
	TP - TOTAL LENGTH OF TOP PACKER AND ASSEMBLY	=	16.74	FT
	BP - TOTAL LENGTH OF BOTTOM PACKER AND ASSEMBLY	=	4.13	FT
	D - DISTANCE BETWEEN GROUND SURFACE AND TOP OF THE TEST ZONE	=	65.0	FT
	PIP - PACKER INFLATION PRESSURE (D PSI **+ 50 PSI**)	=	160	PSI
	H1- DISTANCE BETWEEN WATER PRESSURE GAUGE AND GROUND SURFACE	=	76.3	FT
	H2- DISTANCE BETWEEN GROUND SURFACE AND GROUND WATER TABLE	=	27.47	FT

GZA

BORING NO. /TEST NO. MW-51 T12

PACKER TEST LOG

GZA GEOENVIRONMENTAL OF NEW YORK 440 NINTH AVENUE, 18th FLOOR NEW YORK, NEW YORK 10001 SCIENTISTS AND ENGINEERS	Client Entergy Indian Point Energy Cente Buchanan, NY	BORING NO./TEST NO.	MW-51 T13
		SHEET	1 of 1
		FILE NO.	41.0017869.01
		PROJECT LOCATION	Indian Point

CONTRACTOR	Aquifer Drilling & Testing, Inc.	BORING COORDINATES	N 461.822.4272	E 604275.3373	
FOREMAN	Ed Borner	GROUND SURFACE EL.(FT)	69.62	DATUM	NGVD 29
GZA ENG.	Sara Covelli	FINAL BORING DEPTH (FT)	198.8	DATE START/END	5/24/06
DIAMETER OF DRILLED BOREHOLE	3.83 INCH	GROUND WATER DEPTH (STATIC WATER LEVEL DEPTH)	27.10	(from ground)	0.26 FT ground to casing
I.D. OF DRILLING RODS	2 INCH				

TESTED INTERVAL FROM / TO (FT)	TIME (HR:MIN)	ELAPSED TIME (Δt MIN)	DEPTH UNDER WATER (FT)	DEPTH TO WATER (FT)	CUMULATIVE RECOVERY (ΔH FT)	RECOVERY RATE (ΔH/Δt)
50.0-59.7	8:09	0	9.804	51.60	0.00	-
L= 9.7 ft	8:10	1	10.133	51.27	0.33	0.65800
	8:11	2	10.806	50.59	1.00	0.50100
	8:12	3	11.664	49.74	1.86	0.62000
	8:13	4	12.509	48.89	2.71	0.67625
	8:14	5	13.325	48.08	3.52	0.70420
	8:15	6	14.098	47.30	4.29	0.71567
	8:16	7	14.713	46.69	4.91	0.70129
	8:17	8	15.129	46.27	5.33	0.66562
	8:18	9	15.615	45.79	5.81	0.64567
	8:19	10	16.088	45.31	6.28	0.62840
	8:20	11	16.546	44.85	6.74	0.61291
	8:21	12	16.990	44.41	7.19	0.59883
	8:22	13	17.433	43.97	7.63	0.58685
	8:23	14	17.863	43.54	8.06	0.57564
	8:24	15	18.293	43.11	8.49	0.56593
	8:25	20	18.736	42.66	8.93	0.44660
	8:26	21	19.137	42.26	9.33	0.44443
	8:27	22	19.552	41.85	9.75	0.44309
	8:28	23	19.953	41.45	10.15	0.44126
	8:29	24	20.340	41.06	10.54	0.43900
	8:30	25	20.727	40.67	10.92	0.43692
	8:35	30	22.531	38.87	12.73	0.42423
	8:40	35	24.163	37.24	14.36	0.41026
	8:45	40	25.223	36.18	15.42	0.38548
	8:50	45	25.996	35.40	16.19	0.35982
	9:00	55	27.428	33.97	17.62	0.32044
	9:10	65	28.703	32.70	18.90	0.29075
	9:20	75	29.791	31.61	19.99	0.26649
	9:30	85	30.765	30.64	20.96	0.24660
	9:40	95	31.611	29.79	21.81	0.22955

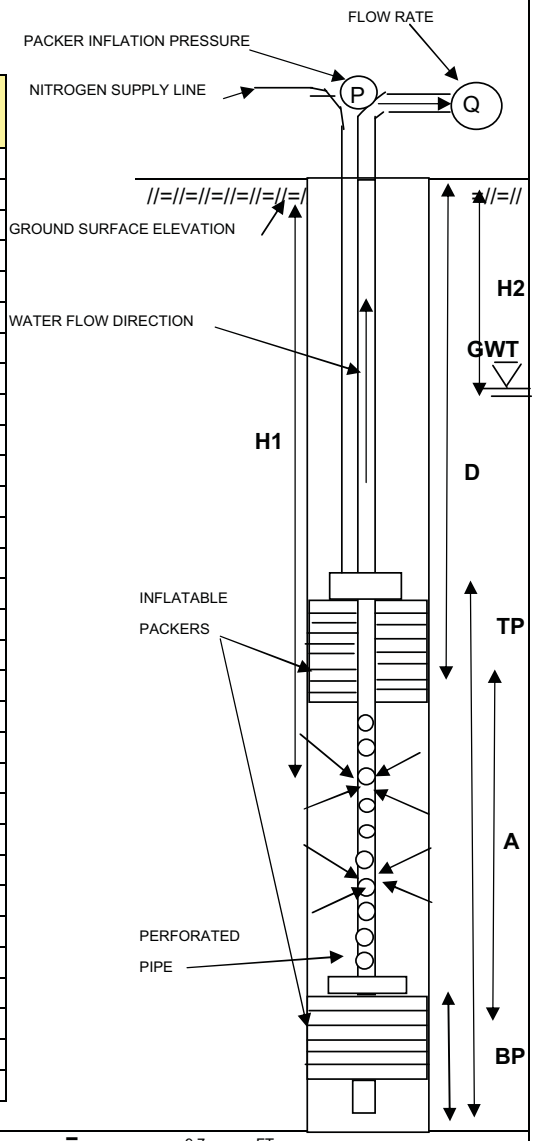

LEGEND:				
	A - TOTAL LENGTH OF TEST SECTION (FT)	=	9.7	FT
	TP - TOTAL LENGTH OF TOP PACKER AND ASSEMBLY	=	16.74	FT
	BP - TOTAL LENGTH OF BOTTOM PACKER AND ASSEMBLY	=	4.13	FT
	D - DISTANCE BETWEEN GROUND SURFACE AND TOP OF THE TEST ZONE	=	50	FT
	PIP - PACKER INFLATION PRESSURE (D PSI **+ 50 PSI**)	=	165	PSI
	H1- DISTANCE BETWEEN WATER PRESSURE GAUGE AND GROUND SURFACE	=	61.4	FT
	H2- DISTANCE BETWEEN GROUND SURFACE AND GROUND WATER TABLE	=	27.10	FT

GZA

BORING NO. /TEST NO. MW-51 T13

PACKER TEST LOG

GZA GEOENVIRONMENTAL OF NEW YORK 440 NINTH AVENUE, 18th FLOOR NEW YORK, NEW YORK 10001 SCIENTISTS AND ENGINEERS	Client Entergy Indian Point Energy Cente Buchanan, NY	BORING NO./TEST NO.	MW-51 T14
		SHEET	1 of 1
		FILE NO.	41.0017869.01
		PROJECT LOCATION	Indian Point

CONTRACTOR	Aquifer Drilling & Testing, Inc.	BORING COORDINATES	N 461.822.4272	E 604275.3373	
FOREMAN	Ed Borner	GROUND SURFACE EL.(FT)	69.62	DATUM	NGVD 29
GZA ENG.	Sara Covelli	FINAL BORING DEPTH (FT)	198.8	DATE START/END	5/24/06
DIAMETER OF DRILLED BOREHOLE	3.83 INCH	GROUND WATER DEPTH (STATIC WATER LEVEL DEPTH)	26.96	(from ground)	0.26 FT ground to casing
I.D. OF DRILLING RODS	2 INCH				

TESTED INTERVAL FROM / TO (FT)	TIME (HR:MIN)	ELAPSED TIME (Δt MIN)	DEPTH UNDER WATER (FT)	DEPTH TO WATER (FT)	CUMULATIVE RECOVERY (ΔH FT)	RECOVERY RATE (ΔH/Δt)
39.5-49.2	10:47	0	5.353	45.45	0.00	-
L= 9.7 ft	10:48	1	5.768	45.03	0.41	0.83000
	10:49	2	6.168	44.63	0.81	0.40750
	10:50	3	6.569	44.23	1.22	0.40533
	10:51	4	6.955	43.85	1.60	0.40050
	10:52	5	7.342	43.46	1.99	0.39780
	10:53	6	7.728	43.07	2.38	0.39583
	10:54	7	8.100	42.70	2.75	0.39243
	10:55	8	8.473	42.33	3.12	0.39000
	10:56	9	8.845	41.96	3.49	0.38800
	10:57	10	9.217	41.58	3.86	0.38640
	10:58	11	9.575	41.23	4.22	0.38382
	10:59	12	10.247	40.55	4.89	0.40783
	11:00	13	12.423	38.38	7.07	0.54385
	11:01	14	14.413	36.39	9.06	0.64714
	11:02	15	15.658	35.14	10.31	0.68700
	11:03	16	16.804	34.00	11.45	0.71569
	11:04	17	17.906	32.89	12.55	0.73841
	11:05	18	18.865	31.94	13.51	0.75067
	11:06	19	19.735	31.07	14.38	0.75695
	11:07	20	20.569	30.23	15.22	0.76080
	11:08	21	21.256	29.54	15.90	0.75729
	11:09	22	21.872	28.93	16.52	0.75086
	11:10	23	22.445	28.36	17.09	0.74313
	11:11	24	22.932	27.87	17.58	0.73246
	11:12	25	23.361	27.44	18.01	0.72032
	11:13	26	23.734	27.07	18.38	0.70696
	11:14	27	24.077	26.72	18.72	0.69348
	11:15	28	24.364	26.44	19.01	0.67896
	11:16	29	24.593	26.21	19.24	0.66345
	11:17	30	24.765	26.04	19.41	0.64707

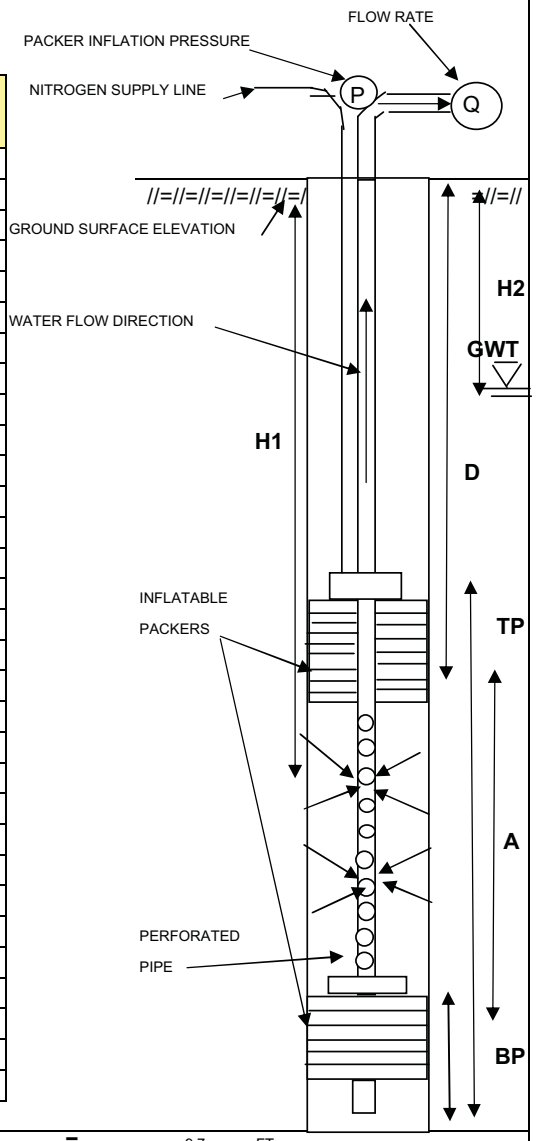

LEGEND:				
	A - TOTAL LENGTH OF TEST SECTION (FT)	=	9.7	FT
	TP - TOTAL LENGTH OF TOP PACKER AND ASSEMBLY	=	16.74	FT
	BP - TOTAL LENGTH OF BOTTOM PACKER AND ASSEMBLY	=	4.13	FT
	D - DISTANCE BETWEEN GROUND SURFACE AND TOP OF THE TEST ZONE	=	39.5	FT
	PIP - PACKER INFLATION PRESSURE (D PSI **+ 50 PSI**)	=	150	PSI
	H1- DISTANCE BETWEEN WATER PRESSURE GAUGE AND GROUND SURFACE	=	50.8	FT
	H2- DISTANCE BETWEEN GROUND SURFACE AND GROUND WATER TABLE	=	26.96	FT

GZA

BORING NO. /TEST NO. MW-51 T14

PACKER TEST LOG

GZA GEOENVIRONMENTAL OF NEW YORK 440 NINTH AVENUE, 18th FLOOR NEW YORK, NEW YORK 10001 SCIENTISTS AND ENGINEERS	Client Entergy Indian Point Energy Cente Buchanan, NY	BORING NO./TEST NO.	MW-51 T15
		SHEET	1 of 1
		FILE NO.	41.0017869.01
		PROJECT LOCATION	Indian Point

CONTRACTOR	Aquifer Drilling & Testing, Inc.	BORING COORDINATES	N 461.822.4272	E 604275.3373	
FOREMAN	Ed Borner	GROUND SURFACE EL.(FT)	69.62	DATUM	NGVD 29
GZA ENG.	Sara Covelli	FINAL BORING DEPTH (FT)	198.8	DATE START/END	5/24/06
DIAMETER OF DRILLED BOREHOLE	3.83 INCH	GROUND WATER DEPTH (STATIC WATER LEVEL DEPTH)	27.03	(from ground)	0.26 FT ground to casing
I.D. OF DRILLING RODS	2 INCH				

TESTED INTERVAL FROM / TO (FT)	TIME (HR:MIN)	ELAPSED TIME (Δt MIN)	DEPTH UNDER WATER (FT)	DEPTH TO WATER (FT)	CUMULATIVE RECOVERY (ΔH FT)	RECOVERY RATE (ΔH/Δt)
29.0-38.7	12:09	0	4.752	35.69	0.00	-
L= 9.7 ft	12:10	1	4.895	35.55	0.14	0.28600
	12:11	2	5.023	35.42	0.27	0.13550
	12:12	3	5.167	35.27	0.41	0.13833
	12:13	4	5.324	35.12	0.57	0.14300
	12:14	5	5.438	35.00	0.69	0.13720
	12:15	6	5.567	34.87	0.81	0.13583
	12:16	7	5.667	34.77	0.91	0.13071
	12:17	8	5.811	34.63	1.06	0.13238
	12:18	9	5.925	34.52	1.17	0.13033
	12:19	10	6.040	34.40	1.29	0.12880
	12:20	11	6.168	34.27	1.42	0.12873
	12:21	12	6.297	34.14	1.54	0.12875
	12:22	13	6.412	34.03	1.66	0.12769
	12:23	14	6.526	33.91	1.77	0.12671
	12:24	15	6.641	33.80	1.89	0.12593
	12:25	16	6.769	33.67	2.02	0.12606
	12:26	17	6.870	33.57	2.12	0.12459
	12:27	18	6.998	33.44	2.25	0.12478
	12:28	19	7.113	33.33	2.36	0.12426
	12:29	20	7.227	33.21	2.48	0.12375
	12:34	25	7.786	32.65	3.03	0.12136
	12:39	30	8.401	32.04	3.65	0.12163
	12:44	35	8.916	31.52	4.16	0.11897
	12:49	40	9.446	30.99	4.69	0.11735
	12:54	45	10.662	29.78	5.91	0.13133
	12:59	50	13.668	26.77	8.92	0.17832

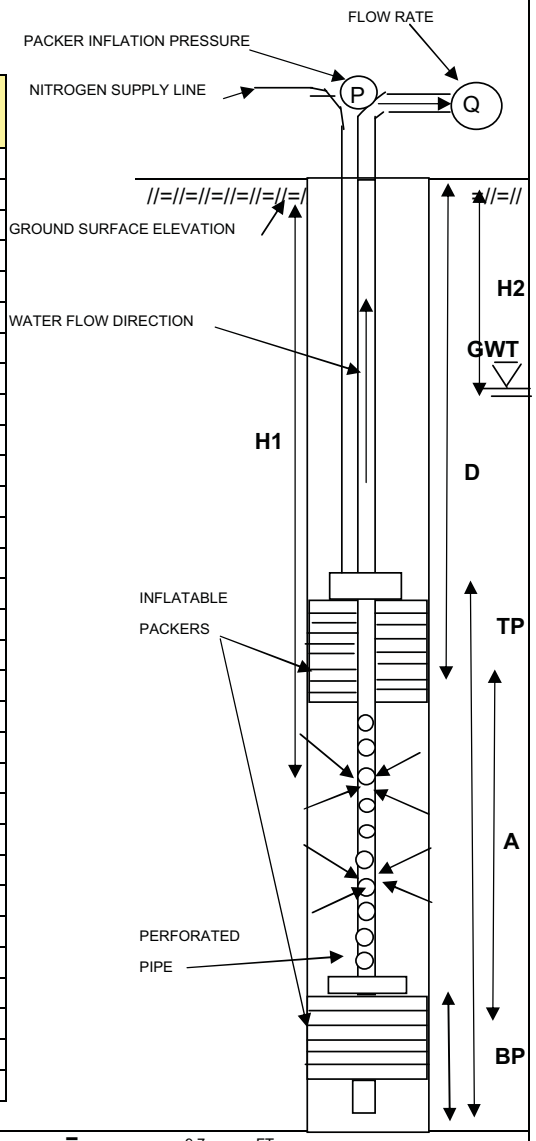

LEGEND:				
	A - TOTAL LENGTH OF TEST SECTION (FT)	=	9.7	FT
	TP - TOTAL LENGTH OF TOP PACKER AND ASSEMBLY	=	16.74	FT
	BP - TOTAL LENGTH OF BOTTOM PACKER AND ASSEMBLY	=	4.13	FT
	D - DISTANCE BETWEEN GROUND SURFACE AND TOP OF THE TEST ZONE	=	29.0	FT
	PIP - PACKER INFLATION PRESSURE (D PSI **+ 50 PSI**)	=	150	PSI
	H1- DISTANCE BETWEEN WATER PRESSURE GAUGE AND GROUND SURFACE	=	40.44	FT
	H2- DISTANCE BETWEEN GROUND SURFACE AND GROUND WATER TABLE	=	27.03	FT

GZA

BORING NO. /TEST NO. MW-51 T15

PACKER TEST LOG

GZA GEOENVIRONMENTAL OF NEW YORK 440 NINTH AVENUE, 18th FLOOR NEW YORK, NEW YORK 10001 SCIENTISTS AND ENGINEERS	Client Entergy Indian Point Energy Cente Buchanan, NY	BORING NO./TEST NO.	MW-52 T1
		SHEET	1 of 1
		FILE NO.	41.0017869.01
		PROJECT LOCATION	Indian Point

CONTRACTOR	Aquifer Drilling & Testing, Inc.	BORING COORDINATES	N 463253.9453	E 604733.0454	
FOREMAN	Ed Borner	GROUND SURFACE EL.(FT)	16.77	DATUM	NGVD 29
GZA ENG.	Steve Kline	FINAL BORING DEPTH (FT)	193.0	DATE START/END	5/30/06
DIAMETER OF DRILLED BOREHOLE	3.83 INCH	GROUND WATER DEPTH (STATIC WATER LEVEL DEPTH)	10.5 (from ground)	0.43 FT ground to casing	
I.D. OF DRILLING RODS	2 INCH				

TESTED INTERVAL FROM / TO (FT)	TIME (HR:MIN)	ELAPSED TIME (Δt MIN)	DEPTH UNDER WATER (FT)	DEPTH TO WATER (FT)	CUMULATIVE RECOVERY (ΔH FT)	RECOVERY RATE (ΔH/Δt)
179.5-189.2	1100	0	142.657	46.74	0.00	-
L= 9.7 ft	1101	1	143.375	46.03	0.72	0.71800
	1102	2	143.965	45.44	1.31	0.65400
	1103	3	144.497	44.90	1.84	0.61333
	1104	4	144.971	44.43	2.31	0.57850
	1105	5	145.446	43.95	2.79	0.55780
	1106	6	145.892	43.51	3.23	0.53917
	1107	7	146.323	43.08	3.67	0.52371
	1108	8	146.711	42.69	4.05	0.50675
	1109	9	147.114	42.29	4.46	0.49522
	1110	10	147.488	41.91	4.83	0.48310
	1111	11	147.847	41.55	5.19	0.47182
	1112	12	148.207	41.19	5.55	0.46250
	1113	13	148.566	40.83	5.91	0.45454
	1114	14	148.883	40.52	6.23	0.44471
	1115	15	149.228	40.17	6.57	0.43807
	1116	16	149.559	39.84	6.90	0.43137
	1117	17	149.889	39.51	7.23	0.42541
	1118	18	150.206	39.19	7.55	0.41939
	1119	19	150.508	38.89	7.85	0.41321
	1120	20	150.824	38.58	8.17	0.40835
	1121	21	151.126	38.27	8.47	0.40329
	1122	22	151.400	38.00	8.74	0.39741
	1123	23	152.090	37.31	9.43	0.41013

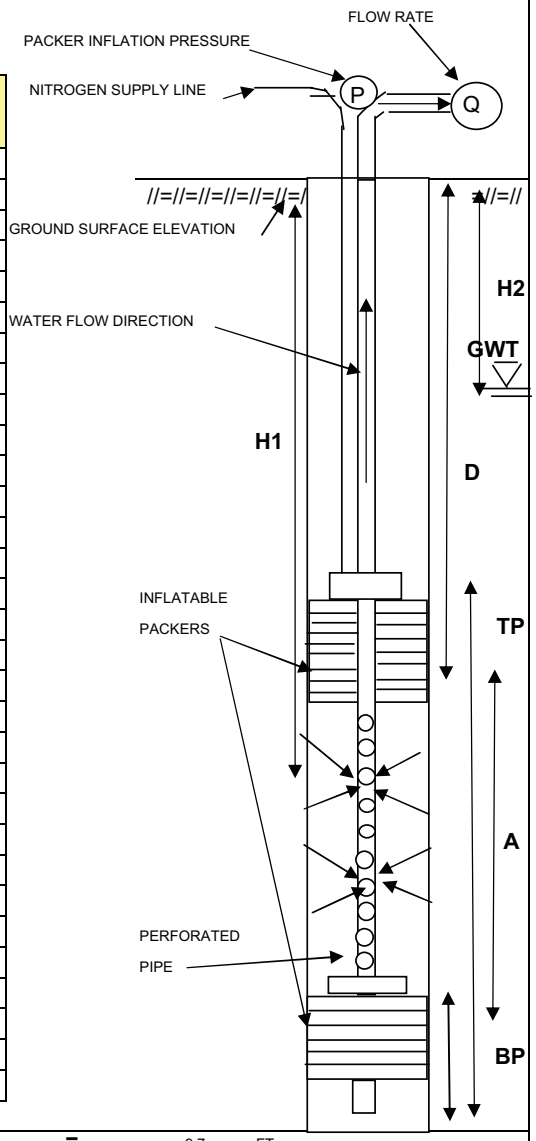

LEGEND:				
	A - TOTAL LENGTH OF TEST SECTION (FT)	=	9.7	FT
	TP - TOTAL LENGTH OF TOP PACKER AND ASSEMBLY	=	16.74	FT
	BP - TOTAL LENGTH OF BOTTOM PACKER AND ASSEMBLY	=	4.13	FT
	D - DISTANCE BETWEEN GROUND SURFACE AND TOP OF THE TEST ZONE	=	179.5	FT
	PIP - PACKER INFLATION PRESSURE (D PSI **+ 50 PSI**)	=	200	PSI
	H1- DISTANCE BETWEEN WATER PRESSURE GAUGE AND GROUND SURFACE	=	189.4	FT
	H2- DISTANCE BETWEEN GROUND SURFACE AND GROUND WATER TABLE	=	10.5	FT

GZA

BORING NO. /TEST NO. MW-52 T1

PACKER TEST LOG

GZA GEOENVIRONMENTAL OF NEW YORK 440 NINTH AVENUE, 18th FLOOR NEW YORK, NEW YORK 10001 SCIENTISTS AND ENGINEERS	Client Entergy Indian Point Energy Cente Buchanan, NY	BORING NO./TEST NO.	MW-52 T2
		SHEET	1 of 1
		FILE NO.	41.0017869.01
		PROJECT LOCATION	Indian Point

CONTRACTOR	Aquifer Drilling & Testing, Inc.	BORING COORDINATES	N 463253.9453	E 604733.0454	
FOREMAN	Ed Borner	GROUND SURFACE EL.(FT)	16.77	DATUM	NGVD 29
GZA ENG.	Steve Kline	FINAL BORING DEPTH (FT)	193.0	DATE START/END	5/30/06
DIAMETER OF DRILLED BOREHOLE	3.83 INCH	GROUND WATER DEPTH (STATIC WATER LEVEL DEPTH)	17.8 (from ground)	0.43 FT ground to casing	
I.D. OF DRILLING RODS	2 INCH				

TESTED INTERVAL FROM / TO (FT)	TIME (HR:MIN)	ELAPSED TIME (Δt MIN)	DEPTH UNDER WATER (FT)	DEPTH TO WATER (FT)	CUMULATIVE RECOVERY (ΔH FT)	RECOVERY RATE (ΔH/Δt)
168.5-178.2	1216	0	129.116	49.28	0.00	-
L= 9.7 ft	1217	1	129.964	48.44	0.85	0.84800
	1218	2	130.740	47.66	1.62	0.81200
	1219	3	131.487	46.91	2.37	0.79033
	1220	4	132.220	46.18	3.10	0.77600
	1221	5	132.910	45.49	3.79	0.75880
	1222	6	133.557	44.84	4.44	0.74017
	1223	7	134.218	44.18	5.10	0.72886
	1224	8	134.850	43.55	5.73	0.71675
	1225	9	135.469	42.93	6.35	0.70589
	1226	10	136.087	42.31	6.97	0.69710
	1227	11	136.719	41.68	7.60	0.69118
	1228	12	137.265	41.14	8.15	0.67908
	1229	13	137.840	40.56	8.72	0.67108
	1230	14	138.401	40.00	9.29	0.66321
	1231	15	138.933	39.47	9.82	0.65447
	1232	16	139.781	38.62	10.67	0.66656

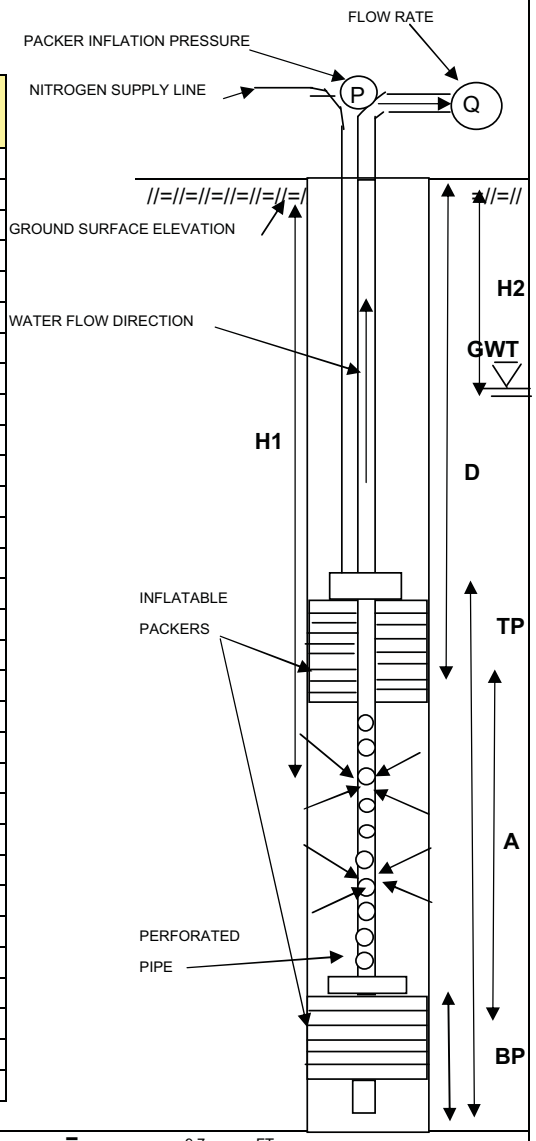

LEGEND:				
	A - TOTAL LENGTH OF TEST SECTION (FT)	=	9.7	FT
	TP - TOTAL LENGTH OF TOP PACKER AND ASSEMBLY	=	16.74	FT
	BP - TOTAL LENGTH OF BOTTOM PACKER AND ASSEMBLY	=	4.13	FT
	D - DISTANCE BETWEEN GROUND SURFACE AND TOP OF THE TEST ZONE	=	168.5	FT
	PIP - PACKER INFLATION PRESSURE (D PSI **+ 50 PSI**)	=	200	PSI
	H1- DISTANCE BETWEEN WATER PRESSURE GAUGE AND GROUND SURFACE	=	178.4	FT
	H2- DISTANCE BETWEEN GROUND SURFACE AND GROUND WATER TABLE	=	17.8	FT

GZA

BORING NO. /TEST NO. MW-52 T2

PACKER TEST LOG

GZA GEOENVIRONMENTAL OF NEW YORK 440 NINTH AVENUE, 18th FLOOR NEW YORK, NEW YORK 10001 SCIENTISTS AND ENGINEERS	Client Entergy Indian Point Energy Cente Buchanan, NY	BORING NO./TEST NO.	MW-52 T3
		SHEET	1 of 1
		FILE NO.	41.0017869.01
		PROJECT LOCATION	Indian Point

CONTRACTOR	Aquifer Drilling & Testing, Inc.	BORING COORDINATES	N 463253.9453	E 604733.0454	
FOREMAN	Ed Borner	GROUND SURFACE EL.(FT)	16.77	DATUM	NGVD 29
GZA ENG.	Sara Covelli	FINAL BORING DEPTH (FT)	193.0	DATE START/END	5/31/06
DIAMETER OF DRILLED BOREHOLE	3.83 INCH	GROUND WATER DEPTH (STATIC WATER LEVEL DEPTH)	12.60 (from ground)	0.43 FT ground to casing	
I.D. OF DRILLING RODS	2 INCH				

TESTED INTERVAL FROM / TO (FT)	TIME (HR:MIN)	ELAPSED TIME (Δt MIN)	DEPTH UNDER WATER (FT)	DEPTH TO WATER (FT)	CUMULATIVE RECOVERY (ΔH FT)	RECOVERY RATE (ΔH/Δt)
158.3-168.0	1015	0	138.904	30.30	0.00	-
L= 9.7 ft	1016	1	139.911	29.29	1.01	1.00700
	1017	2	140.845	28.36	1.94	0.97050
	1018	3	141.722	27.48	2.82	0.93933
	1019	4	142.542	26.66	3.64	0.90950
	1020	5	143.318	25.88	4.41	0.88280
	1021	6	144.080	25.12	5.18	0.86267
	1022	7	144.770	24.43	5.87	0.83800
	1023	8	145.432	23.77	6.53	0.81600
	1024	9	146.050	23.15	7.15	0.79400
	1025	10	146.668	22.53	7.76	0.77640
	1026	11	147.229	21.97	8.33	0.75682
	1027	12	147.761	21.44	8.86	0.73808
	1028	13	148.264	20.94	9.36	0.72000
	1029	14	148.725	20.48	9.82	0.70150
	1030	15	149.170	20.03	10.27	0.68440
	1031	16	149.587	19.61	10.68	0.66769
	1032	17	149.990	19.21	11.09	0.65212
	1033	18	150.364	18.84	11.46	0.63667
	1034	19	150.724	18.48	11.82	0.62211
	1035	20	151.054	18.15	12.15	0.60750
	1036	21	151.371	17.83	12.47	0.59367
	1037	22	151.673	17.53	12.77	0.58041
	1038	23	151.960	17.24	13.06	0.56765
	1039	24	152.191	17.01	13.29	0.55363
	1040	25	152.435	16.77	13.53	0.54124
	1045	30	153.399	15.80	14.50	0.48317
	1050	35	154.003	15.20	15.10	0.43140
	1055	40	154.477	14.72	15.57	0.38933
	1100	45	154.895	14.31	15.99	0.35536
	1105	50	155.254	13.95	16.35	0.32700

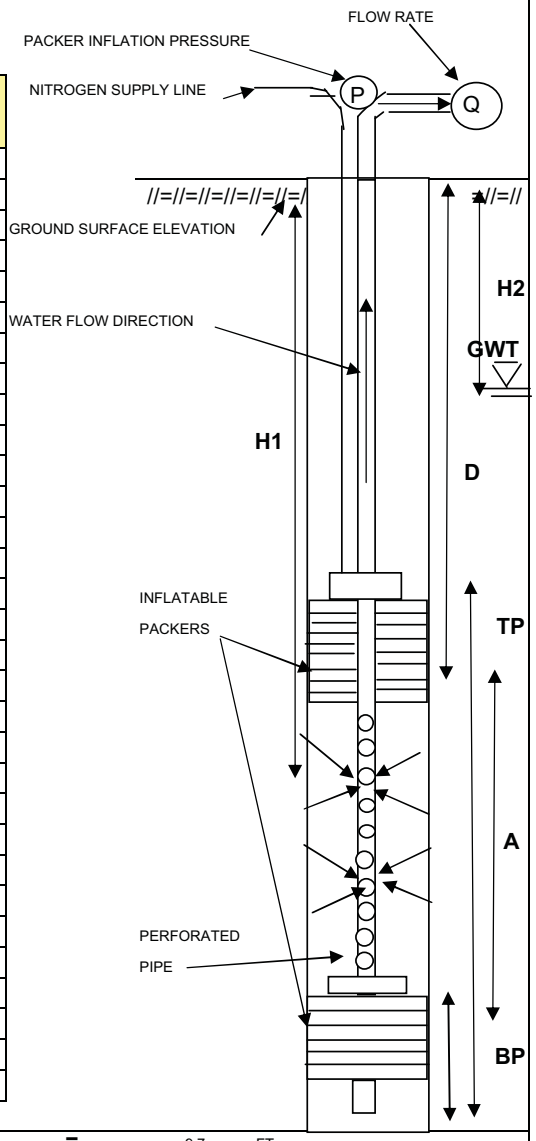

LEGEND:				
	A - TOTAL LENGTH OF TEST SECTION (FT)	=	9.7	FT
	TP - TOTAL LENGTH OF TOP PACKER AND ASSEMBLY	=	16.74	FT
	BP - TOTAL LENGTH OF BOTTOM PACKER AND ASSEMBLY	=	4.13	FT
	D - DISTANCE BETWEEN GROUND SURFACE AND TOP OF THE TEST ZONE	=	158.3	FT
	PIP - PACKER INFLATION PRESSURE (D PSI **+ 50 PSI**)	=	175	PSI
	H1- DISTANCE BETWEEN WATER PRESSURE GAUGE AND GROUND SURFACE	=	169.2	FT
	H2- DISTANCE BETWEEN GROUND SURFACE AND GROUND WATER TABLE	=	12.60	FT

GZA

BORING NO. /TEST NO. MW-52 T3

PACKER TEST LOG

GZA GEOENVIRONMENTAL OF NEW YORK 440 NINTH AVENUE, 18th FLOOR NEW YORK, NEW YORK 10001 SCIENTISTS AND ENGINEERS	Client Entergy Indian Point Energy Cente Buchanan, NY	BORING NO./TEST NO.	MW-52 T4
		SHEET	1 of 1
		FILE NO.	41.0017869.01
		PROJECT LOCATION	Indian Point

CONTRACTOR	Aquifer Drilling & Testing, Inc.	BORING COORDINATES	N 463253.9453	E 604733.0454	
FOREMAN	Ed Borner	GROUND SURFACE EL.(FT)	16.77	DATUM	NGVD 29
GZA ENG.	Sara Covelli	FINAL BORING DEPTH (FT)	193.0	DATE START/END	5/31/06
DIAMETER OF DRILLED BOREHOLE	3.83 INCH	GROUND WATER DEPTH (STATIC WATER LEVEL DEPTH)	14.98 (from ground)	0.43 FT ground to casing	
I.D. OF DRILLING RODS	2 INCH				

TESTED INTERVAL FROM / TO (FT)	TIME (HR:MIN)	ELAPSED TIME (Δt MIN)	DEPTH UNDER WATER (FT)	DEPTH TO WATER (FT)	CUMULATIVE RECOVERY (ΔH FT)	RECOVERY RATE (ΔH/Δt)
143.5-153.2	1205	0	119.460	34.84	0.00	-
L= 9.7 ft	1206	1	120.394	33.91	0.93	0.93400
	1207	2	121.227	33.07	1.77	0.88350
	1208	3	122.017	32.28	2.56	0.85233
	1209	4	122.808	31.49	3.35	0.83700
	1210	5	123.540	30.76	4.08	0.81600
	1211	6	124.259	30.04	4.80	0.79983
	1212	7	124.934	29.37	5.47	0.78200
	1213	8	125.609	28.69	6.15	0.76863
	1214	9	126.227	28.07	6.77	0.75189
	1215	10	126.845	27.46	7.39	0.73850
	1216	11	127.434	26.87	7.97	0.72491
	1217	12	127.995	26.31	8.54	0.71125
	1218	13	128.555	25.75	9.10	0.69962
	1219	14	129.087	25.21	9.63	0.68764
	1220	15	129.590	24.71	10.13	0.67533
	1221	16	130.079	24.22	10.62	0.66369
	1222	17	130.539	23.76	11.08	0.65171
	1223	18	130.970	23.33	11.51	0.63944
	1224	19	131.387	22.91	11.93	0.62774
	1225	20	131.803	22.50	12.34	0.61715
	1226	21	132.177	22.12	12.72	0.60557
	1227	22	132.551	21.75	13.09	0.59505
	1228	23	132.910	21.39	13.45	0.58478
	1229	24	133.241	21.06	13.78	0.57421
	1230	25	133.600	20.70	14.14	0.56560
	1235	30	135.138	19.16	15.68	0.52260
	1240	35	136.274	18.03	16.81	0.48040
	1245	40	137.208	17.09	17.75	0.44370
	1250	45	138.157	16.14	18.70	0.41549
	1300	55	139.594	14.71	20.13	0.36607

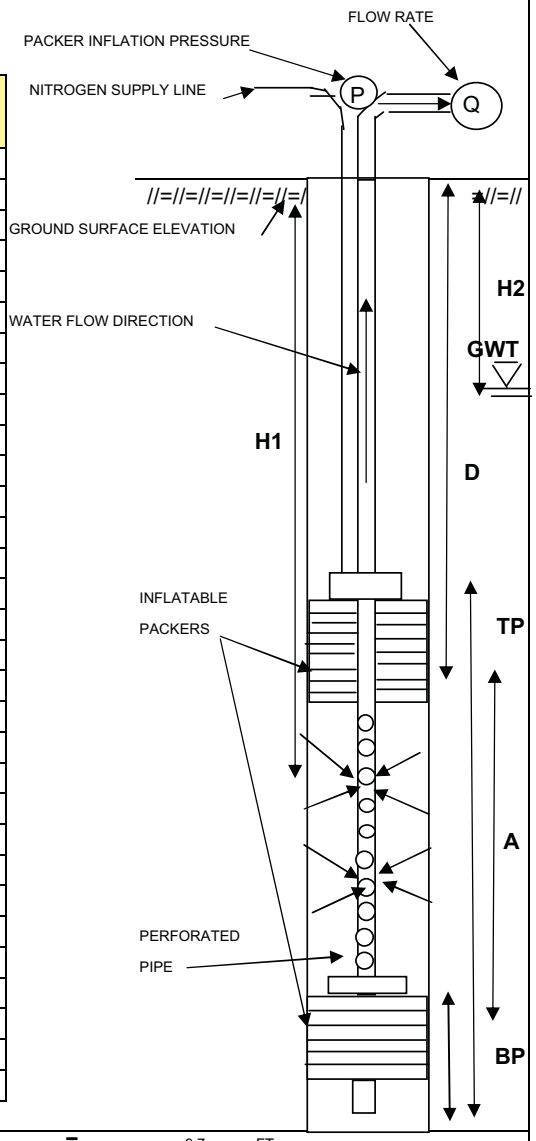

LEGEND:				
	A - TOTAL LENGTH OF TEST SECTION (FT)	=	9.7	FT
	TP - TOTAL LENGTH OF TOP PACKER AND ASSEMBLY	=	16.74	FT
	BP - TOTAL LENGTH OF BOTTOM PACKER AND ASSEMBLY	=	4.13	FT
	D - DISTANCE BETWEEN GROUND SURFACE AND TOP OF THE TEST ZONE	=	143.5	FT
	PIP - PACKER INFLATION PRESSURE (D PSI **+ 50 PSI**)	=	160	PSI
	H1- DISTANCE BETWEEN WATER PRESSURE GAUGE AND GROUND SURFACE	=	154.3	FT
	H2- DISTANCE BETWEEN GROUND SURFACE AND GROUND WATER TABLE	=	14.98	FT

GZA

BORING NO. /TEST NO. MW-52 T4

PACKER TEST LOG

GZA GEOENVIRONMENTAL OF NEW YORK 440 NINTH AVENUE, 18th FLOOR NEW YORK, NEW YORK 10001 SCIENTISTS AND ENGINEERS	Client Entergy Indian Point Energy Cente Buchanan, NY	BORING NO./TEST NO.	MW-52 T5
		SHEET	1 of 1
		FILE NO.	41.0017869.01
		PROJECT LOCATION	Indian Point

CONTRACTOR	Aquifer Drilling & Testing, Inc.	BORING COORDINATES	N 463253.9453	E 604733.0454	
FOREMAN	Ed Borner	GROUND SURFACE EL.(FT)	16.77	DATUM	NGVD 29
GZA ENG.	Sara Covelli	FINAL BORING DEPTH (FT)	193.0	DATE START/END	5/31/06
DIAMETER OF DRILLED BOREHOLE	3.83 INCH	GROUND WATER DEPTH (STATIC WATER LEVEL DEPTH)	15.40 (from ground)	0.43 FT ground to casing	
I.D. OF DRILLING RODS	2 INCH				

TESTED INTERVAL FROM / TO (FT)	TIME (HR:MIN)	ELAPSED TIME (Δt MIN)	DEPTH UNDER WATER (FT)	DEPTH TO WATER (FT)	CUMULATIVE RECOVERY (ΔH FT)	RECOVERY RATE (ΔH/Δt)
133.2-142.9	1359	0	110.626	33.57	0.00	-
L= 9.7 ft	1400	1	111.344	32.86	0.72	0.71800
	1401	2	112.048	32.15	1.42	0.71100
	1402	3	112.723	31.48	2.10	0.69900
	1403	4	113.355	30.85	2.73	0.68225
	1404	5	113.972	30.23	3.35	0.66920
	1405	6	114.533	29.67	3.91	0.65117
	1406	7	115.078	29.12	4.45	0.63600
	1407	8	115.610	28.59	4.98	0.62300
	1408	9	116.084	28.12	5.46	0.60644
	1409	10	116.572	27.63	5.95	0.59460
	1410	11	117.032	27.17	6.41	0.58236
	1411	12	117.463	26.74	6.84	0.56975
	1412	13	117.851	26.35	7.22	0.55577
	1413	14	118.224	25.98	7.60	0.54271
	1414	15	118.598	25.60	7.97	0.53147
	1415	16	118.957	25.24	8.33	0.52069
	1416	17	119.302	24.90	8.68	0.51035
	1417	18	119.618	24.58	8.99	0.49956
	1418	19	119.934	24.27	9.31	0.48989
	1419	20	120.236	23.96	9.61	0.48050
	1420	21	120.509	23.69	9.88	0.47062
	1421	22	120.767	23.43	10.14	0.46095
	1422	23	121.055	23.15	10.43	0.45343
	1423	24	121.285	22.92	10.66	0.44413
	1424	25	121.529	22.67	10.90	0.43612
	1429	30	122.621	21.58	12.00	0.39983
	1439	40	124.244	19.96	13.62	0.34045
	1449	50	125.466	18.73	14.84	0.29680
	1459	60	126.371	17.83	15.75	0.26242
	1509	70	127.046	17.15	16.42	0.23457

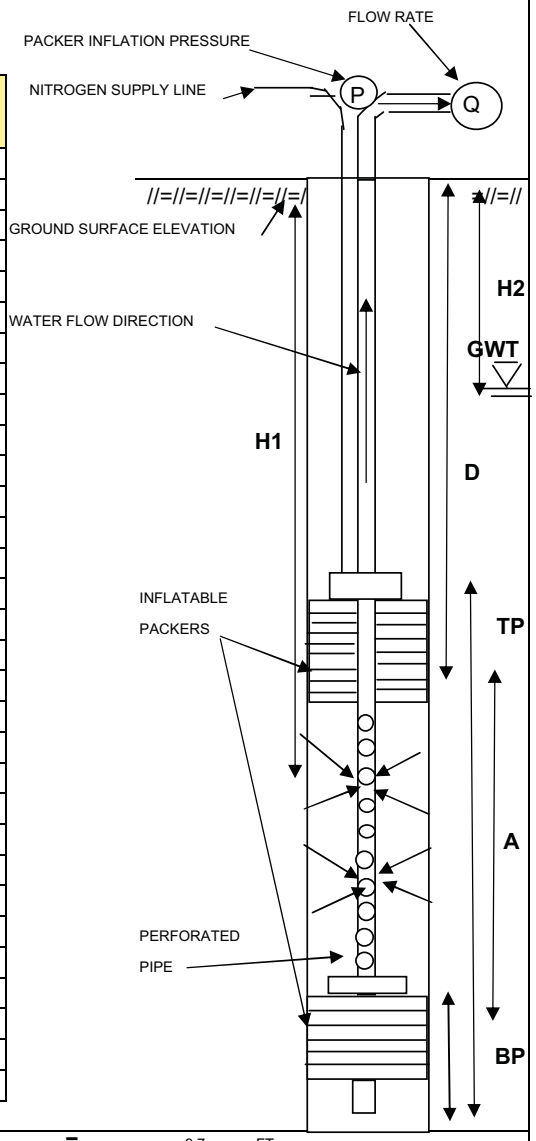

LEGEND:				
	A - TOTAL LENGTH OF TEST SECTION (FT)	=	9.7	FT
	TP - TOTAL LENGTH OF TOP PACKER AND ASSEMBLY	=	16.74	FT
	BP - TOTAL LENGTH OF BOTTOM PACKER AND ASSEMBLY	=	4.13	FT
	D - DISTANCE BETWEEN GROUND SURFACE AND TOP OF THE TEST ZONE	=	133.2	FT
	PIP - PACKER INFLATION PRESSURE (D PSI **+ 50 PSI**)	=	160	PSI
	H1- DISTANCE BETWEEN WATER PRESSURE GAUGE AND GROUND SURFACE	=	144.2	FT
	H2- DISTANCE BETWEEN GROUND SURFACE AND GROUND WATER TABLE	=	15.40	FT

GZA

BORING NO. /TEST NO. MW-52 T5

PACKER TEST LOG

GZA GEOENVIRONMENTAL OF NEW YORK 440 NINTH AVENUE, 18th FLOOR NEW YORK, NEW YORK 10001 SCIENTISTS AND ENGINEERS	Client Entergy Indian Point Energy Cente Buchanan, NY	BORING NO./TEST NO.	MW-52 T6
		SHEET	1 of 1
		FILE NO.	41.0017869.01
		PROJECT LOCATION	Indian Point

CONTRACTOR	Aquifer Drilling & Testing, Inc.	BORING COORDINATES	N 463253.9453	E 604733.0454	
FOREMAN	Ed Borner	GROUND SURFACE EL.(FT)	16.77	DATUM	NGVD 29
GZA ENG.	Sara Covelli	FINAL BORING DEPTH (FT)	193.0	DATE START/END	6/1/06
DIAMETER OF DRILLED BOREHOLE	3.83 INCH	GROUND WATER DEPTH (STATIC WATER LEVEL DEPTH)	12.17 (from ground)	0.43 FT ground to casing	
I.D. OF DRILLING RODS	2 INCH				

TESTED INTERVAL FROM / TO (FT)	TIME (HR:MIN)	ELAPSED TIME (Δt MIN)	DEPTH UNDER WATER (FT)	DEPTH TO WATER (FT)	CUMULATIVE RECOVERY (ΔH FT)	RECOVERY RATE (ΔH/Δt)
115.3-125.0	838	0	95.880	30.42	0.00	-
L= 9.7 ft	839	1	96.755	29.55	0.88	0.87500
	840	2	97.530	28.77	1.65	0.82500
	841	3	98.306	27.99	2.43	0.80867
	842	4	99.067	27.23	3.19	0.79675
	843	5	99.770	26.53	3.89	0.77800
	844	6	100.445	25.86	4.57	0.76083
	845	7	101.105	25.20	5.23	0.74643
	846	8	101.737	24.56	5.86	0.73213
	847	9	102.326	23.97	6.45	0.71622
	848	10	102.929	23.37	7.05	0.70490
	849	11	103.460	22.84	7.58	0.68909
	850	12	103.991	22.31	8.11	0.67592
	851	13	104.494	21.81	8.61	0.66262
	852	14	105.011	21.29	9.13	0.65221
	853	15	105.456	20.84	9.58	0.63840
	854	16	105.887	20.41	10.01	0.62544
	855	17	106.303	20.00	10.42	0.61312
	856	18	106.677	19.62	10.80	0.59983
	857	19	107.079	19.22	11.20	0.58942
	858	20	107.409	18.89	11.53	0.57645
	859	21	107.754	18.55	11.87	0.56543
	900	22	108.098	18.20	12.22	0.55536
	901	23	108.400	17.90	12.52	0.54435
	902	24	108.687	17.61	12.81	0.53363
	903	25	108.974	17.33	13.09	0.52376
	908	30	110.195	16.11	14.32	0.47717
	913	35	111.100	15.20	15.22	0.43486
	918	40	111.746	14.55	15.87	0.39665
	923	45	112.249	14.05	16.37	0.36376

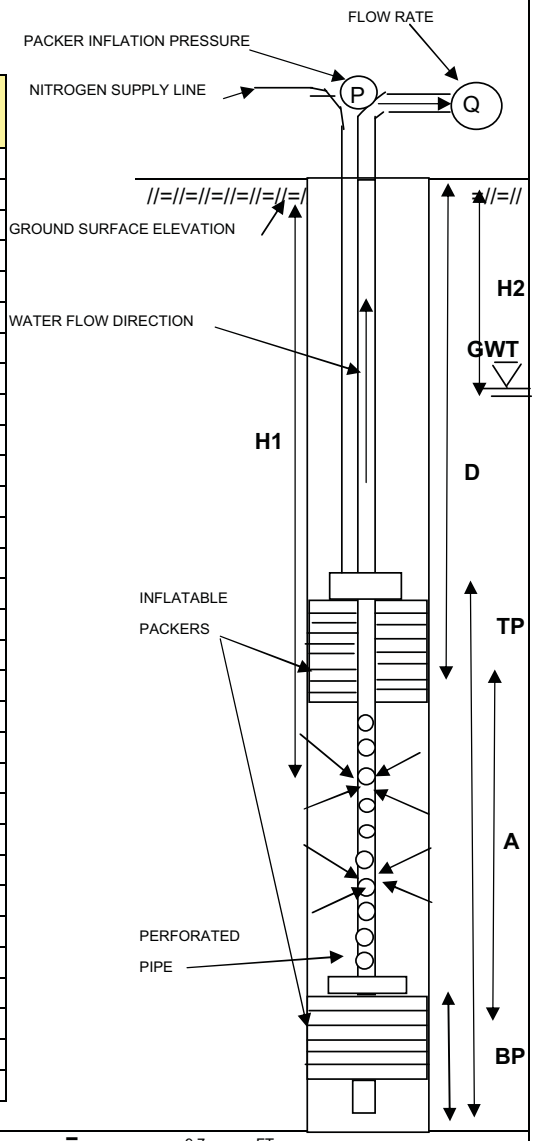

LEGEND:				
	A - TOTAL LENGTH OF TEST SECTION (FT)	=	9.7	FT
	TP - TOTAL LENGTH OF TOP PACKER AND ASSEMBLY	=	16.74	FT
	BP - TOTAL LENGTH OF BOTTOM PACKER AND ASSEMBLY	=	4.13	FT
	D - DISTANCE BETWEEN GROUND SURFACE AND TOP OF THE TEST ZONE	=	115.3	FT
	PIP - PACKER INFLATION PRESSURE (D PSI **+ 50 PSI**)	=	155	PSI
	H1- DISTANCE BETWEEN WATER PRESSURE GAUGE AND GROUND SURFACE	=	126.3	FT
	H2- DISTANCE BETWEEN GROUND SURFACE AND GROUND WATER TABLE	=	12.17	FT

GZA

BORING NO. /TEST NO. MW-52 T6

PACKER TEST LOG

GZA GEOENVIRONMENTAL OF NEW YORK 440 NINTH AVENUE, 18th FLOOR NEW YORK, NEW YORK 10001 SCIENTISTS AND ENGINEERS	Client Entergy Indian Point Energy Cente Buchanan, NY	BORING NO./TEST NO.	MW-52 T7
		SHEET	1 of 1
		FILE NO.	41.0017869.01
		PROJECT LOCATION	Indian Point

CONTRACTOR	Aquifer Drilling & Testing, Inc.	BORING COORDINATES	N 463253.9453	E 604733.0454	
FOREMAN	Ed Borner	GROUND SURFACE EL.(FT)	16.77	DATUM	NGVD 29
GZA ENG.	Sara Covelli	FINAL BORING DEPTH (FT)	193.0	DATE START/END	6/1/06
DIAMETER OF DRILLED BOREHOLE	3.83 INCH	GROUND WATER DEPTH (STATIC WATER LEVEL DEPTH)	14.90 (from ground)	0.43 FT ground to casing	
I.D. OF DRILLING RODS	2 INCH				

TESTED INTERVAL FROM / TO (FT)	TIME (HR:MIN)	ELAPSED TIME (Δt MIN)	DEPTH UNDER WATER (FT)	DEPTH TO WATER (FT)	CUMULATIVE RECOVERY (ΔH FT)	RECOVERY RATE (ΔH/Δt)
100.5-110.2	1032	0	76.205	35.40	0.00	-
L= 9.7 ft	1033	1	77.439	34.16	1.23	1.23400
	1034	2	78.573	33.03	2.37	1.18400
	1035	3	79.663	31.94	3.46	1.15267
	1036	4	80.682	30.92	4.48	1.11925
	1037	5	81.657	29.94	5.45	1.09040
	1038	6	82.604	29.00	6.40	1.06650
	1039	7	83.479	28.12	7.27	1.03914
	1040	8	84.312	27.29	8.11	1.01338
	1041	9	85.101	26.50	8.90	0.98844
	1042	10	85.790	25.81	9.59	0.95850
	1043	11	86.407	25.19	10.20	0.92745
	1044	12	86.995	24.61	10.79	0.89917
	1045	13	87.569	24.03	11.36	0.87415
	1046	14	88.086	23.51	11.88	0.84864
	1047	15	88.602	23.00	12.40	0.82647
	1048	16	89.076	22.52	12.87	0.80444
	1049	17	89.521	22.08	13.32	0.78329
	1050	18	89.952	21.65	13.75	0.76372
	1051	19	90.368	21.23	14.16	0.74542
	1052	20	90.741	20.86	14.54	0.72680
	1053	21	91.114	20.49	14.91	0.70995
	1054	22	91.444	20.16	15.24	0.69268
	1055	23	91.760	19.84	15.56	0.67630
	1056	24	92.076	19.52	15.87	0.66129
	1057	25	92.334	19.27	16.13	0.64516
	1102	30	93.540	18.06	17.34	0.57783
	1107	35	94.444	17.16	18.24	0.52111
	1112	40	95.176	16.42	18.97	0.47428

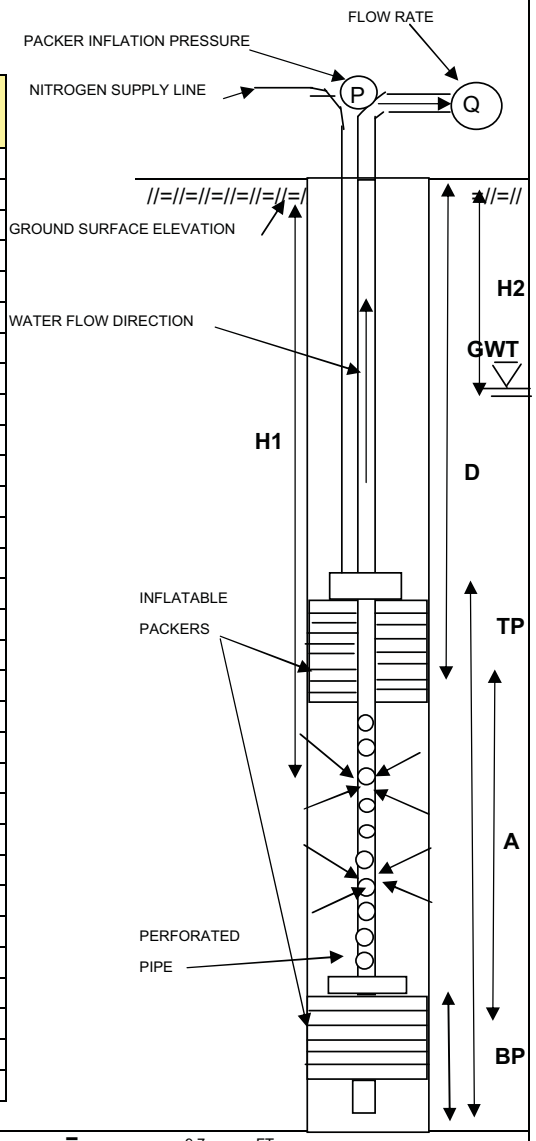

LEGEND:				
	A - TOTAL LENGTH OF TEST SECTION (FT)	=	9.7	FT
	TP - TOTAL LENGTH OF TOP PACKER AND ASSEMBLY	=	16.74	FT
	BP - TOTAL LENGTH OF BOTTOM PACKER AND ASSEMBLY	=	4.13	FT
	D - DISTANCE BETWEEN GROUND SURFACE AND TOP OF THE TEST ZONE	=	100.5	FT
	PIP - PACKER INFLATION PRESSURE (D PSI **+ 50 PSI**)	=	155	PSI
	H1- DISTANCE BETWEEN WATER PRESSURE GAUGE AND GROUND SURFACE	=	111.6	FT
	H2- DISTANCE BETWEEN GROUND SURFACE AND GROUND WATER TABLE	=	14.90	FT

GZA

BORING NO. /TEST NO. MW-52 T7

PACKER TEST LOG

GZA GEOENVIRONMENTAL OF NEW YORK 440 NINTH AVENUE, 18th FLOOR NEW YORK, NEW YORK 10001 SCIENTISTS AND ENGINEERS	Client Entergy Indian Point Energy Cente Buchanan, NY	BORING NO./TEST NO.	MW-52 T8
		SHEET	1 of 1
		FILE NO.	41.0017869.01
		PROJECT LOCATION	Indian Point

CONTRACTOR	Aquifer Drilling & Testing, Inc.	BORING COORDINATES	N 463253.9453	E 604733.0454	
FOREMAN	Ed Borner	GROUND SURFACE EL.(FT)	16.77	DATUM	NGVD 29
GZA ENG.	Sara Covelli	FINAL BORING DEPTH (FT)	193.0	DATE START/END	6/1/06
DIAMETER OF DRILLED BOREHOLE	3.83 INCH	GROUND WATER DEPTH (STATIC WATER LEVEL DEPTH)	16.65 (from ground)	0.43 FT ground to casing	
I.D. OF DRILLING RODS	2 INCH				

TESTED INTERVAL FROM / TO (FT)	TIME (HR:MIN)	ELAPSED TIME (Δt MIN)	DEPTH UNDER WATER (FT)	DEPTH TO WATER (FT)	CUMULATIVE RECOVERY (ΔH FT)	RECOVERY RATE (ΔH/Δt)
89.0-98.7	1211	0	63.283	36.82	0.00	-
L= 9.7 ft	1212	1	64.272	35.83	0.99	0.98900
	1213	2	65.161	34.94	1.88	0.93900
	1214	3	66.065	34.04	2.78	0.92733
	1215	4	66.954	33.15	3.67	0.91775
	1216	5	67.772	32.33	4.49	0.89780
	1217	6	68.589	31.51	5.31	0.88433
	1218	7	69.349	30.75	6.07	0.86657
	1219	8	70.095	30.01	6.81	0.85150
	1220	9	70.812	29.29	7.53	0.83656
	1221	10	71.472	28.63	8.19	0.81890
	1222	11	72.132	27.97	8.85	0.80445
	1223	12	72.734	27.37	9.45	0.78758
	1224	13	73.322	26.78	10.04	0.77223
	1225	14	73.910	26.19	10.63	0.75907
	1226	15	74.455	25.65	11.17	0.74480
	1227	16	74.972	25.13	11.69	0.73056
	1228	17	75.517	24.58	12.23	0.71965
	1229	18	76.062	24.04	12.78	0.70994
	1230	19	76.564	23.54	13.28	0.69900
	1231	20	77.037	23.06	13.75	0.68770
	1232	21	77.497	22.60	14.21	0.67686
	1233	22	77.913	22.19	14.63	0.66500
	1234	23	78.314	21.79	15.03	0.65352
	1235	24	79.032	21.07	15.75	0.65621
	1236	25	79.362	20.74	16.08	0.64316
	1241	30	80.538	19.56	17.26	0.57517
	1246	35	81.643	18.46	18.36	0.52457
	1251	40	82.489	17.61	19.21	0.48015
	1256	45	83.178	16.92	19.90	0.44211
***	1301	50	83.809	16.29	20.53	0.41052

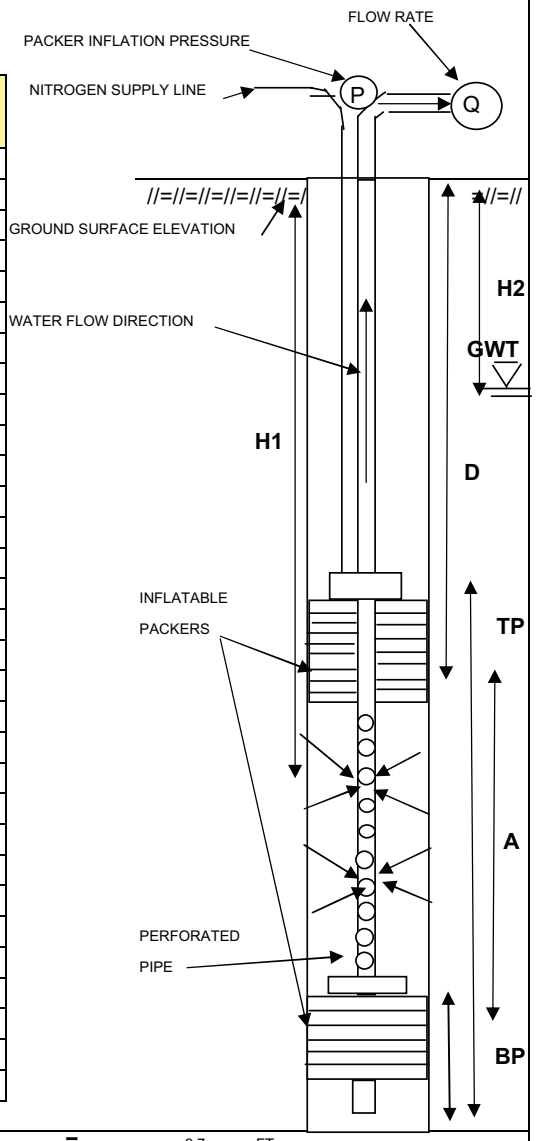

*** NOTE: Extremely heavy rain began at approximately 1300 hrs.

LEGEND:			
A - TOTAL LENGTH OF TEST SECTION (FT)	=	9.7	FT
TP - TOTAL LENGTH OF TOP PACKER AND ASSEMBLY	=	16.74	FT
BP - TOTAL LENGTH OF BOTTOM PACKER AND ASSEMBLY	=	4.13	FT
D - DISTANCE BETWEEN GROUND SURFACE AND TOP OF THE TEST ZONE	=	89.0	FT
PIP - PACKER INFLATION PRESSURE (D PSI **+ 50 PSI**)	=	165	PSI
H1- DISTANCE BETWEEN WATER PRESSURE GAUGE AND GROUND SURFACE	=	100.1	FT
H2- DISTANCE BETWEEN GROUND SURFACE AND GROUND WATER TABLE	=	16.65	FT

GZA

BORING NO. /TEST NO. MW-52 T8

PACKER TEST LOG

GZA GEOENVIRONMENTAL OF NEW YORK 440 NINTH AVENUE, 18th FLOOR NEW YORK, NEW YORK 10001 SCIENTISTS AND ENGINEERS	Client Entergy Indian Point Energy Cente Buchanan, NY	BORING NO./TEST NO.	MW-52 T9
		SHEET	1 of 1
		FILE NO.	41.0017869.01
		PROJECT LOCATION	Indian Point

CONTRACTOR	Aquifer Drilling & Testing, Inc.	BORING COORDINATES	N 463253.9453	E 604733.0454	
FOREMAN	Ed Borner	GROUND SURFACE EL.(FT)	16.77	DATUM	NGVD 29
GZA ENG.	Sara Covelli	FINAL BORING DEPTH (FT)	193.0	DATE START/END	6/2/06
DIAMETER OF DRILLED BOREHOLE	3.83 INCH	GROUND WATER DEPTH (STATIC WATER LEVEL DEPTH)	10.25 (from ground)	0.43 FT ground to casing	
I.D. OF DRILLING RODS	2 INCH				

TESTED INTERVAL FROM / TO (FT)	TIME (HR:MIN)	ELAPSED TIME (Δt MIN)	DEPTH UNDER WATER (FT)	DEPTH TO WATER (FT)	CUMULATIVE RECOVERY (ΔH FT)	RECOVERY RATE (ΔH/Δt)
76.4-86.1	847	0	58.164	29.44	0.00	-
L= 9.7 ft	848	1	58.623	28.98	0.46	0.45900
	849	2	59.025	28.58	0.86	0.43050
	850	3	59.412	28.19	1.25	0.41600
	851	4	59.756	27.84	1.59	0.39800
	852	5	60.057	27.54	1.89	0.37860
	853	6	60.315	27.29	2.15	0.35850
	854	7	60.587	27.01	2.42	0.34614
	855	8	60.860	26.74	2.70	0.33700
	856	9	61.089	26.51	2.93	0.32500
	857	10	61.333	26.27	3.17	0.31690
	858	11	61.534	26.07	3.37	0.30636
	859	12	61.749	25.85	3.59	0.29875
	900	13	61.935	25.67	3.77	0.29008
	901	14	62.136	25.46	3.97	0.28371
	902	15	62.337	25.26	4.17	0.27820
	907	20	63.125	24.48	4.96	0.24805
	912	25	63.857	23.74	5.69	0.22772
	917	30	64.516	23.08	6.35	0.21173
	922	35	65.061	22.54	6.90	0.19706
	927	40	65.577	22.02	7.41	0.18533
	932	45	66.036	21.56	7.87	0.17493
	937	50	66.466	21.13	8.30	0.16604
	942	55	66.825	20.78	8.66	0.15747
	947	60	67.155	20.45	8.99	0.14985
	957	70	67.728	19.87	9.56	0.13663
	1007	80	68.159	19.44	10.00	0.12494
	1017	90	68.503	19.10	10.34	0.11488
	1027	100	68.847	18.75	10.68	0.10683
	1042	115	69.306	18.29	11.14	0.09689
	1057	130	69.679	17.92	11.52	0.08858

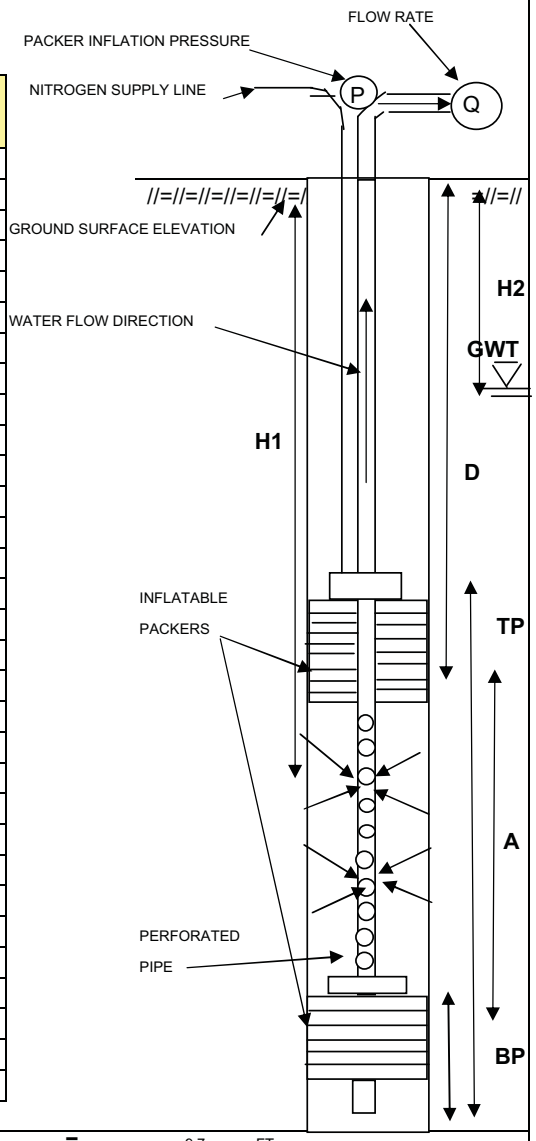

NOTE: Due to time constraints and low yield, full recovery could not be achieved at this interval.

LEGEND:			
A - TOTAL LENGTH OF TEST SECTION (FT)	=	9.7	FT
TP - TOTAL LENGTH OF TOP PACKER AND ASSEMBLY	=	16.74	FT
BP - TOTAL LENGTH OF BOTTOM PACKER AND ASSEMBLY	=	4.13	FT
D - DISTANCE BETWEEN GROUND SURFACE AND TOP OF THE TEST ZONE	=	76.4	FT
PIP - PACKER INFLATION PRESSURE (D PSI **+ 50 PSI**)	=	155	PSI
H1- DISTANCE BETWEEN WATER PRESSURE GAUGE AND GROUND SURFACE	=	87.6	FT
H2- DISTANCE BETWEEN GROUND SURFACE AND GROUND WATER TABLE	=	10.25	FT

GZA

BORING NO. /TEST NO. MW-52 T9

PACKER TEST LOG

GZA GEOENVIRONMENTAL OF NEW YORK 440 NINTH AVENUE, 18th FLOOR NEW YORK, NEW YORK 10001 SCIENTISTS AND ENGINEERS	Client Entergy Indian Point Energy Cente Buchanan, NY	BORING NO./TEST NO.	MW-52 T10
		SHEET	1 of 1
		FILE NO.	41.0017869.01
		PROJECT LOCATION	Indian Point

CONTRACTOR	Aquifer Drilling & Testing, Inc.	BORING COORDINATES	N 463253.9453	E 604733.0454	
FOREMAN	Ed Borner	GROUND SURFACE EL.(FT)	16.77	DATUM	NGVD 29
GZA ENG.	Sara Covelli	FINAL BORING DEPTH (FT)	193.0	DATE START/END	6/2/06
DIAMETER OF DRILLED BOREHOLE	3.83 INCH	GROUND WATER DEPTH (STATIC WATER LEVEL DEPTH)	13.67 (from ground)		0.43 FT ground to casing
I.D. OF DRILLING RODS	2 INCH				

TESTED INTERVAL FROM / TO (FT)	TIME (HR:MIN)	ELAPSED TIME (Δt MIN)	DEPTH UNDER WATER (FT)	DEPTH TO WATER (FT)	CUMULATIVE RECOVERY (ΔH FT)	RECOVERY RATE (ΔH/Δt)
69.0-78.7	1147	0	45.680	34.52	0.00	-
L= 9.7 ft	1148	1	45.694	34.51	0.01	0.01400
	1149	2	45.694	34.51	0.01	0.00700
	1150	3	45.708	34.49	0.03	0.00933
	1151	4	45.708	34.49	0.03	0.00700
	1152	5	45.723	34.48	0.04	0.00860
	1153	6	45.723	34.48	0.04	0.00717
	1154	7	45.723	34.48	0.04	0.00614
	1155	8	45.737	34.46	0.06	0.00713
	1156	9	45.737	34.46	0.06	0.00633
	1157	10	45.737	34.46	0.06	0.00570
	1158	11	45.751	34.45	0.07	0.00645
	1159	12	45.751	34.45	0.07	0.00592
	1200	13	45.766	34.43	0.09	0.00662
	1201	14	45.751	34.45	0.07	0.00507
	1202	15	45.766	34.43	0.09	0.00573
	1207	20	45.780	34.42	0.10	0.00500
	1212	25	45.794	34.41	0.11	0.00456
	1217	30	45.809	34.39	0.13	0.00430
	1222	35	45.823	34.38	0.14	0.00409
	1227	40	45.837	34.36	0.16	0.00393
	1232	45	45.852	34.35	0.17	0.00382
	1237	50	45.866	34.33	0.19	0.00372
	1242	55	45.880	34.32	0.20	0.00364
	1247	60	45.895	34.31	0.22	0.00358
	1257	70	45.909	34.29	0.23	0.00327
	1307	80	45.952	34.25	0.27	0.00340
	1317	90	45.981	34.22	0.30	0.00334
	1327	100	45.995	34.21	0.31	0.00315
	1342	115	46.038	34.16	0.36	0.00311
	1357	130	46.067	34.13	0.39	0.00298

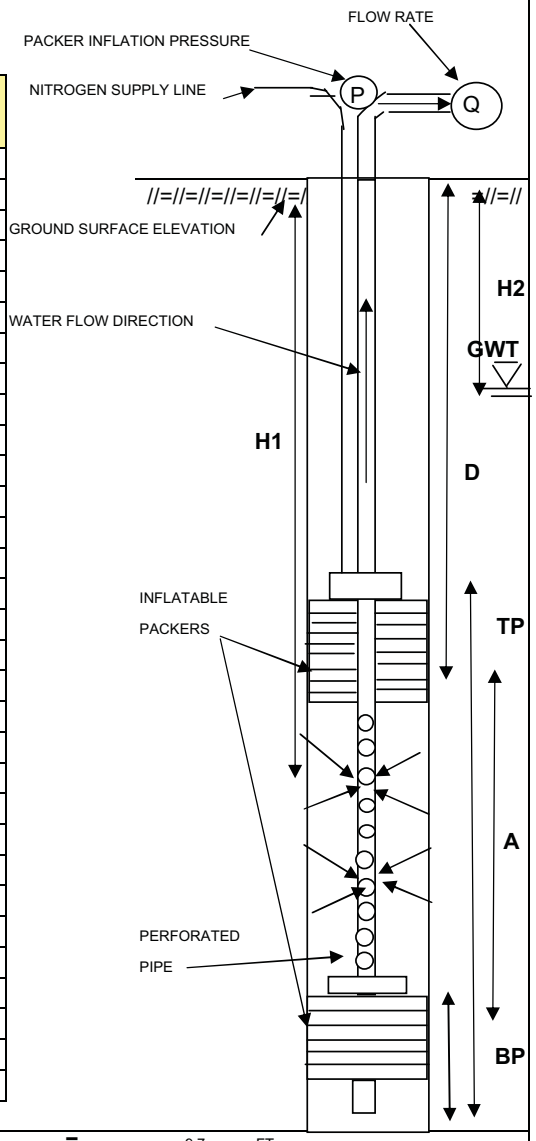

NOTE: Due to time constraints and low yield, full recovery could not be achieved at this interval.

LEGEND:			
A - TOTAL LENGTH OF TEST SECTION (FT)	=	9.7	FT
TP - TOTAL LENGTH OF TOP PACKER AND ASSEMBLY	=	16.74	FT
BP - TOTAL LENGTH OF BOTTOM PACKER AND ASSEMBLY	=	4.13	FT
D - DISTANCE BETWEEN GROUND SURFACE AND TOP OF THE TEST ZONE	=	69.0	FT
PIP - PACKER INFLATION PRESSURE (D PSI **+ 50 PSI**)	=	150	PSI
H1- DISTANCE BETWEEN WATER PRESSURE GAUGE AND GROUND SURFACE	=	80.2	FT
H2- DISTANCE BETWEEN GROUND SURFACE AND GROUND WATER TABLE	=	13.67	FT

GZA

BORING NO. /TEST NO. MW-52 T10

PACKER TEST LOG

GZA GEOENVIRONMENTAL OF NEW YORK 440 NINTH AVENUE, 18th FLOOR NEW YORK, NEW YORK 10001 SCIENTISTS AND ENGINEERS	Client Entergy Indian Point Energy Cente Buchanan, NY	BORING NO./TEST NO.	MW-52 T11
		SHEET	1 of 1
		FILE NO.	41.0017869.01
		PROJECT LOCATION	Indian Point

CONTRACTOR	Aquifer Drilling & Testing, Inc.	BORING COORDINATES	N 463253.9453	E 604733.0454	
FOREMAN	Ed Borner	GROUND SURFACE EL.(FT)	16.77	DATUM	NGVD 29
GZA ENG.	Sara Covelli	FINAL BORING DEPTH (FT)	193.0	DATE START/END	6/5/06
DIAMETER OF DRILLED BOREHOLE	3.83 INCH	GROUND WATER DEPTH (STATIC WATER LEVEL DEPTH)	10.30 (from ground)	0.43 FT ground to casing	
I.D. OF DRILLING RODS	2 INCH				

TESTED INTERVAL FROM / TO (FT)	TIME (HR:MIN)	ELAPSED TIME (Δt MIN)	DEPTH UNDER WATER (FT)	DEPTH TO WATER (FT)	CUMULATIVE RECOVERY (ΔH FT)	RECOVERY RATE (ΔH/Δt)
60.0-69.7	833	0	40.192	31.01	0.00	-
L= 9.7 ft	834	1	40.278	30.92	0.09	0.08600
	835	2	40.321	30.88	0.13	0.06450
	836	3	40.392	30.81	0.20	0.06667
	837	4	40.435	30.77	0.24	0.06075
	838	5	40.493	30.71	0.30	0.06020
	839	6	40.550	30.65	0.36	0.05967
	840	7	40.593	30.61	0.40	0.05729
	841	8	40.622	30.58	0.43	0.05375
	842	9	40.650	30.55	0.46	0.05089
	843	10	40.665	30.54	0.47	0.04730
	844	11	40.693	30.51	0.50	0.04555
	845	12	40.708	30.49	0.52	0.04300
	846	13	40.722	30.48	0.53	0.04077
	847	14	40.736	30.46	0.54	0.03886
	848	15	40.765	30.44	0.57	0.03820
	853	20	40.836	30.36	0.64	0.03220
	858	25	40.937	30.26	0.74	0.02980
	903	30	40.994	30.21	0.80	0.02673
	908	35	41.066	30.13	0.87	0.02497
	913	40	41.152	30.05	0.96	0.02400
	918	45	41.223	29.98	1.03	0.02291
	923	50	41.295	29.91	1.10	0.02206
	928	55	41.367	29.83	1.18	0.02136
	933	60	41.424	29.78	1.23	0.02053
	943	70	41.567	29.63	1.38	0.01964
	953	80	41.739	29.46	1.55	0.01934
	1003	90	41.854	29.35	1.66	0.01847
	1013	100	41.997	29.20	1.81	0.01805
	1023	110	42.126	29.07	1.93	0.01758
	1033	120	42.241	28.96	2.05	0.01708

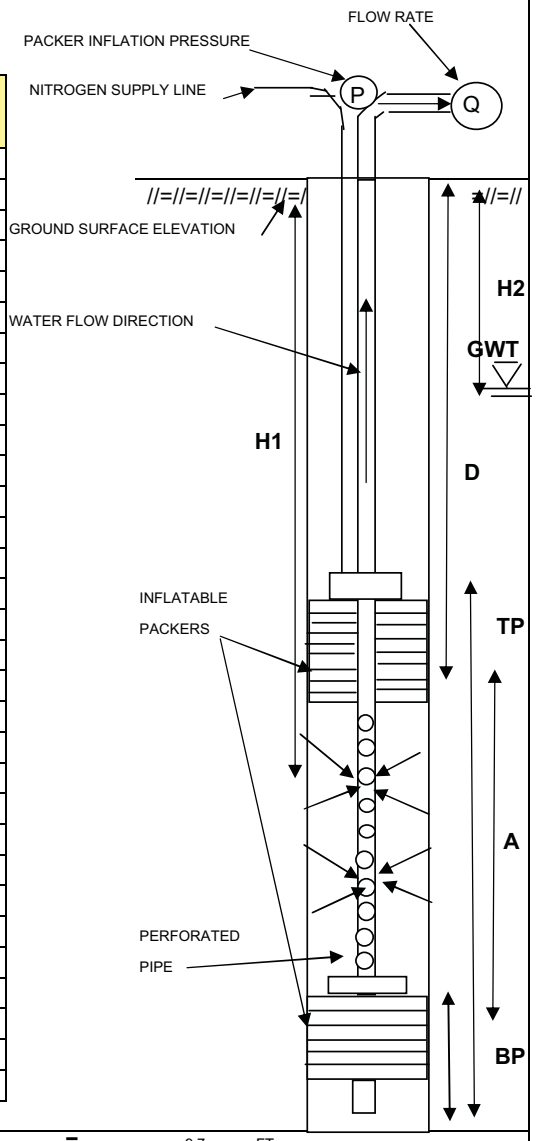

NOTE: Due to time constraints and low yield, full recovery could not be achieved at this interval.

LEGEND:			
A - TOTAL LENGTH OF TEST SECTION (FT)	=	9.7	FT
TP - TOTAL LENGTH OF TOP PACKER AND ASSEMBLY	=	16.74	FT
BP - TOTAL LENGTH OF BOTTOM PACKER AND ASSEMBLY	=	4.13	FT
D - DISTANCE BETWEEN GROUND SURFACE AND TOP OF THE TEST ZONE	=	60.0	FT
PIP - PACKER INFLATION PRESSURE (D PSI **+ 50 PSI**)	=	150	PSI
H1- DISTANCE BETWEEN WATER PRESSURE GAUGE AND GROUND SURFACE	=	71.2	FT
H2- DISTANCE BETWEEN GROUND SURFACE AND GROUND WATER TABLE	=	10.30	FT

GZA

BORING NO. /TEST NO. MW-52 T11

PACKER TEST LOG

GZA GEOENVIRONMENTAL OF NEW YORK 440 NINTH AVENUE, 18th FLOOR NEW YORK, NEW YORK 10001 SCIENTISTS AND ENGINEERS	Client Entergy Indian Point Energy Cente Buchanan, NY	BORING NO./TEST NO.	MW-52 T12
		SHEET	1 of 1
		FILE NO.	41.0017869.01
		PROJECT LOCATION	Indian Point

CONTRACTOR	Aquifer Drilling & Testing, Inc.	BORING COORDINATES	N 463253.9453	E 604733.0454	
FOREMAN	Ed Borner	GROUND SURFACE EL.(FT)	16.77	DATUM	NGVD 29
GZA ENG.	Sara Covelli	FINAL BORING DEPTH (FT)	193.0	DATE START/END	6/5/06
DIAMETER OF DRILLED BOREHOLE	3.83 INCH	GROUND WATER DEPTH (STATIC WATER LEVEL DEPTH)	14.26 (from ground)	0.43 FT ground to casing	
I.D. OF DRILLING RODS	2 INCH				

TESTED INTERVAL FROM / TO (FT)	TIME (HR:MIN)	ELAPSED TIME (Δt MIN)	DEPTH UNDER WATER (FT)	DEPTH TO WATER (FT)	CUMULATIVE RECOVERY (ΔH FT)	RECOVERY RATE (ΔH/Δt)
50.0-59.7	1204	0	26.855	34.45	0.00	-
L= 9.7 ft	1205	1	27.615	33.69	0.76	0.76000
	1206	2	28.359	32.94	1.50	0.75200
	1207	3	29.090	32.21	2.24	0.74500
	1208	4	29.777	31.52	2.92	0.73050
	1209	5	30.465	30.84	3.61	0.72200
	1210	6	31.124	30.18	4.27	0.71150
	1211	7	31.797	29.50	4.94	0.70600
	1212	8	32.413	28.89	5.56	0.69475
	1213	9	33.014	28.29	6.16	0.68433
	1214	10	33.602	27.70	6.75	0.67470
	1215	11	34.189	27.11	7.33	0.66673
	1216	12	34.748	26.55	7.89	0.65775
	1217	13	35.292	26.01	8.44	0.64900
	1218	14	35.822	25.48	8.97	0.64050
	1219	15	36.338	24.96	9.48	0.63220
	1224	20	38.702	22.60	11.85	0.59235
	1229	25	40.779	20.52	13.92	0.55696
	1234	30	42.542	18.76	15.69	0.52290
	1239	35	44.046	17.25	17.19	0.49117
	1244	40	45.293	16.01	18.44	0.46095
	1249	45	46.411	14.89	19.56	0.43458
	1254	50	47.328	13.97	20.47	0.40946
	1259	55	48.102	13.20	21.25	0.38631
	1304	60	48.718	12.58	21.86	0.36438
	1309	65	49.234	12.07	22.38	0.34429
	1314	70	49.664	11.64	22.81	0.32584

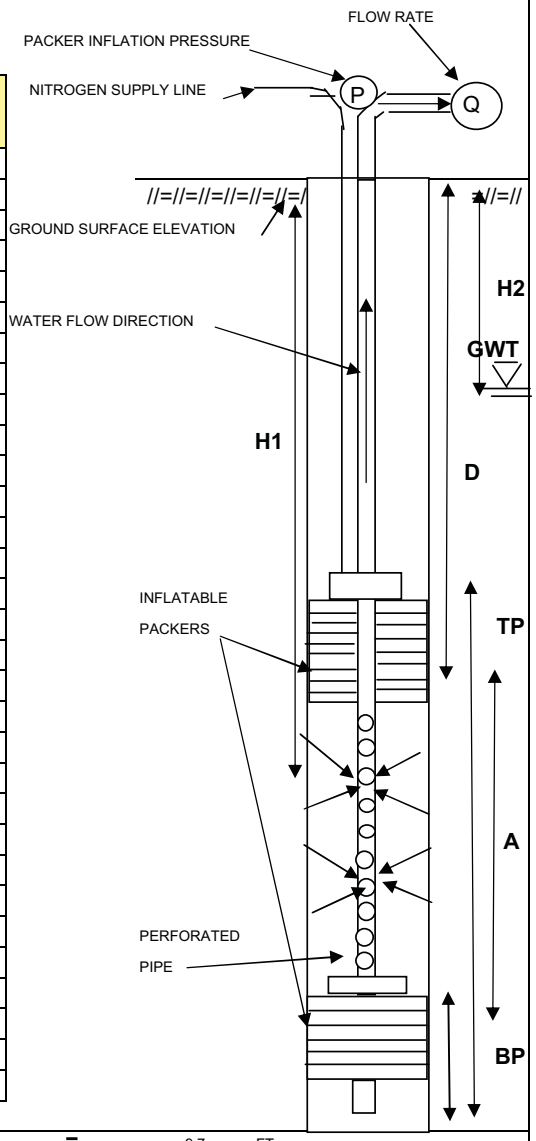

LEGEND:				
	A - TOTAL LENGTH OF TEST SECTION (FT)	=	9.7	FT
	TP - TOTAL LENGTH OF TOP PACKER AND ASSEMBLY	=	16.74	FT
	BP - TOTAL LENGTH OF BOTTOM PACKER AND ASSEMBLY	=	4.13	FT
	D - DISTANCE BETWEEN GROUND SURFACE AND TOP OF THE TEST ZONE	=	50.0	FT
	PIP - PACKER INFLATION PRESSURE (D PSI **+ 50 PSI**)	=	160	PSI
	H1- DISTANCE BETWEEN WATER PRESSURE GAUGE AND GROUND SURFACE	=	61.3	FT
	H2- DISTANCE BETWEEN GROUND SURFACE AND GROUND WATER TABLE	=	14.26	FT

GZA

BORING NO. /TEST NO. MW-52 T12

PACKER TEST LOG

GZA GEOENVIRONMENTAL OF NEW YORK 440 NINTH AVENUE, 18th FLOOR NEW YORK, NEW YORK 10001 SCIENTISTS AND ENGINEERS	Client Entergy Indian Point Energy Cente Buchanan, NY	BORING NO./TEST NO.	MW-52 T13
		SHEET	1 of 1
		FILE NO.	41.0017869.01
		PROJECT LOCATION	Indian Point

CONTRACTOR	Aquifer Drilling & Testing, Inc.	BORING COORDINATES	N 463253.9453	E 604733.0454	
FOREMAN	Ed Borner	GROUND SURFACE EL.(FT)	16.77	DATUM	NGVD 29
GZA ENG.	Sara Covelli	FINAL BORING DEPTH (FT)	193.0	DATE START/END	6/5/06
DIAMETER OF DRILLED BOREHOLE	3.83 INCH	GROUND WATER DEPTH (STATIC WATER LEVEL DEPTH)	14.82 (from ground)	0.43 FT ground to casing	
I.D. OF DRILLING RODS	2 INCH				

TESTED INTERVAL FROM / TO (FT)	TIME (HR:MIN)	ELAPSED TIME (Δt MIN)	DEPTH UNDER WATER (FT)	DEPTH TO WATER (FT)	CUMULATIVE RECOVERY (ΔH FT)	RECOVERY RATE (ΔH/Δt)
38.8-48.5	1401	0	15.315	34.89	0.00	-
L= 9.7 ft	1402	1	15.315	34.89	0.00	0.00000
	1403	2	15.343	34.86	0.03	0.01400
	1404	3	15.358	34.84	0.04	0.01433
	1405	4	15.372	34.83	0.06	0.01425
	1406	5	15.372	34.83	0.06	0.01140
	1407	6	15.386	34.81	0.07	0.01183
	1408	7	15.415	34.79	0.10	0.01429
	1409	8	15.415	34.79	0.10	0.01250
	1410	9	15.429	34.77	0.11	0.01267
	1411	10	15.444	34.76	0.13	0.01290
	1412	11	15.444	34.76	0.13	0.01173
	1413	12	15.458	34.74	0.14	0.01192
	1414	13	15.472	34.73	0.16	0.01208
	1415	14	15.486	34.71	0.17	0.01221
	1416	15	15.501	34.70	0.19	0.01240
	1421	20	15.544	34.66	0.23	0.01145
	1426	25	15.615	34.59	0.30	0.01200
	1431	30	15.673	34.53	0.36	0.01193

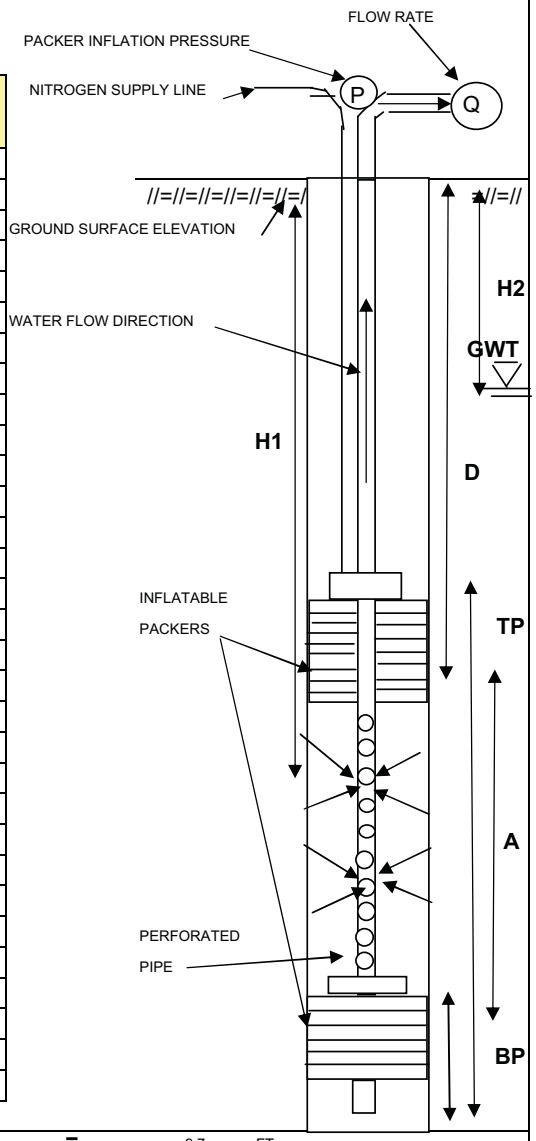

NOTE: Due to time constraints and low yield, full recovery could not be achieved at this interval.

LEGEND:			
A - TOTAL LENGTH OF TEST SECTION (FT)	=	9.7	FT
TP - TOTAL LENGTH OF TOP PACKER AND ASSEMBLY	=	16.74	FT
BP - TOTAL LENGTH OF BOTTOM PACKER AND ASSEMBLY	=	4.13	FT
D - DISTANCE BETWEEN GROUND SURFACE AND TOP OF THE TEST ZONE	=	38.8	FT
PIP - PACKER INFLATION PRESSURE (D PSI **+ 50 PSI**)	=	150	PSI
H1- DISTANCE BETWEEN WATER PRESSURE GAUGE AND GROUND SURFACE	=	50.2	FT
H2- DISTANCE BETWEEN GROUND SURFACE AND GROUND WATER TABLE	=	14.82	FT

GZA

BORING NO. /TEST NO. MW-52 T13

PACKER TEST LOG

GZA GEOENVIRONMENTAL OF NEW YORK 440 NINTH AVENUE, 18th FLOOR NEW YORK, NEW YORK 10001 SCIENTISTS AND ENGINEERS	Client Entergy Indian Point Energy Cente Buchanan, NY	BORING NO./TEST NO.	MW-52 T14
		SHEET	1 of 1
		FILE NO.	41.0017869.01
		PROJECT LOCATION	Indian Point

CONTRACTOR	Aquifer Drilling & Testing, Inc.	BORING COORDINATES	N 463253.9453	E 604733.0454	
FOREMAN	Ed Borner	GROUND SURFACE EL.(FT)	16.77	DATUM	NGVD 29
GZA ENG.	Sara Covelli	FINAL BORING DEPTH (FT)	193.0	DATE START/END	6/6/06
DIAMETER OF DRILLED BOREHOLE	3.83 INCH	GROUND WATER DEPTH (STATIC WATER LEVEL DEPTH)	11.10 (from ground)	0.43 FT ground to casing	
I.D. OF DRILLING RODS	2 INCH				

TESTED INTERVAL FROM / TO (FT)	TIME (HR:MIN)	ELAPSED TIME (Δt MIN)	DEPTH UNDER WATER (FT)	DEPTH TO WATER (FT)	CUMULATIVE RECOVERY (ΔH FT)	RECOVERY RATE (ΔH/Δt)
28.2-37.9	854	0	9.761	29.74	0.00	-
L= 9.7 ft	855	1	9.761	29.74	0.00	0.00000
	856	2	9.789	29.71	0.03	0.01400
	857	3	9.789	29.71	0.03	0.00933
	858	4	9.789	29.71	0.03	0.00700
	859	5	9.789	29.71	0.03	0.00560
	900	6	9.804	29.70	0.04	0.00717
	901	7	9.804	29.70	0.04	0.00614
	902	8	9.804	29.70	0.04	0.00538
	903	9	9.804	29.70	0.04	0.00478
	904	10	9.804	29.70	0.04	0.00430
	905	11	9.804	29.70	0.04	0.00391
	906	12	9.804	29.70	0.04	0.00358
	907	13	9.804	29.70	0.04	0.00331
	908	14	9.804	29.70	0.04	0.00307
	909	15	9.818	29.68	0.06	0.00380
	914	20	9.818	29.68	0.06	0.00285
	919	25	9.847	29.65	0.09	0.00344
	924	30	9.861	29.64	0.10	0.00333
	929	35	9.875	29.63	0.11	0.00326
	934	40	9.875	29.63	0.11	0.00285
	939	45	9.875	29.63	0.11	0.00253
	944	50	9.904	29.60	0.14	0.00286

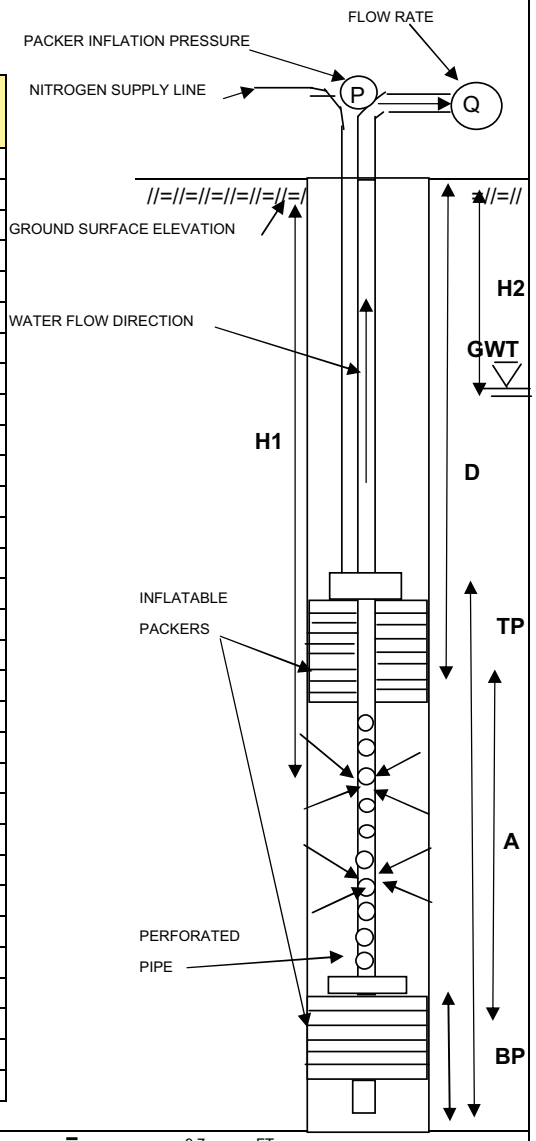

NOTE: Due to time constraints and low yield, full recovery could not be achieved at this interval.

LEGEND:			
A - TOTAL LENGTH OF TEST SECTION (FT)	=	9.7	FT
TP - TOTAL LENGTH OF TOP PACKER AND ASSEMBLY	=	16.74	FT
BP - TOTAL LENGTH OF BOTTOM PACKER AND ASSEMBLY	=	4.13	FT
D - DISTANCE BETWEEN GROUND SURFACE AND TOP OF THE TEST ZONE	=	28.2	FT
PIP - PACKER INFLATION PRESSURE (D PSI **+ 50 PSI**)	=	150	PSI
H1- DISTANCE BETWEEN WATER PRESSURE GAUGE AND GROUND SURFACE	=	39.5	FT
H2- DISTANCE BETWEEN GROUND SURFACE AND GROUND WATER TABLE	=	11.10	FT

GZA

BORING NO. /TEST NO. MW-52 T14

PACKER TEST LOG

GZA GEOENVIRONMENTAL OF NEW YORK 440 NINTH AVENUE, 18th FLOOR NEW YORK, NEW YORK 10001 SCIENTISTS AND ENGINEERS	Client Entergy Indian Point Energy Cente Buchanan, NY	BORING NO./TEST NO.	MW-52 T15
		SHEET	1 of 1
		FILE NO.	41.0017869.01
		PROJECT LOCATION	Indian Point

CONTRACTOR	Aquifer Drilling & Testing, Inc.	BORING COORDINATES	N 463253.9453	E 604733.0454	
FOREMAN	Ed Borner	GROUND SURFACE EL.(FT)	16.77	DATUM	NGVD 29
GZA ENG.	Sara Covelli	FINAL BORING DEPTH (FT)	193.0	DATE START/END	6/6/06
DIAMETER OF DRILLED BOREHOLE	3.83 INCH	GROUND WATER DEPTH (STATIC WATER LEVEL DEPTH)	14.00 (from ground)	0.43 FT ground to casing	
I.D. OF DRILLING RODS	2 INCH				

TESTED INTERVAL FROM / TO (FT)	TIME (HR:MIN)	ELAPSED TIME (Δt MIN)	DEPTH UNDER WATER (FT)	DEPTH TO WATER (FT)	CUMULATIVE RECOVERY (ΔH FT)	RECOVERY RATE (ΔH/Δt)
18.5-28.2	1024	0	4.637	25.16	0.00	-
L= 9.7 ft	1025	1	4.637	25.16	0.00	0.00000
	1026	2	4.637	25.16	0.00	0.00000
	1027	3	4.637	25.16	0.00	0.00000
	1028	4	4.637	25.16	0.00	0.00000
	1029	5	4.637	25.16	0.00	0.00000
	1030	6	4.666	25.13	0.03	0.00483
	1031	7	4.666	25.13	0.03	0.00414
	1032	8	4.680	25.12	0.04	0.00537
	1033	9	4.680	25.12	0.04	0.00478
	1034	10	4.680	25.12	0.04	0.00430
	1035	11	4.680	25.12	0.04	0.00391
	1036	12	4.680	25.12	0.04	0.00358
	1037	13	4.680	25.12	0.04	0.00331
	1038	14	4.680	25.12	0.04	0.00307
	1039	15	4.680	25.12	0.04	0.00287
	1044	20	4.709	25.09	0.07	0.00360
	1049	25	4.723	25.08	0.09	0.00344
	1054	30	4.752	25.05	0.11	0.00383
	1059	35	4.752	25.05	0.11	0.00329
	1104	40	4.766	25.03	0.13	0.00323
	1109	45	4.780	25.02	0.14	0.00318
	1114	50	4.794	25.01	0.16	0.00314
	1119	55	4.794	25.01	0.16	0.00285
	1124	60	4.823	24.98	0.19	0.00310

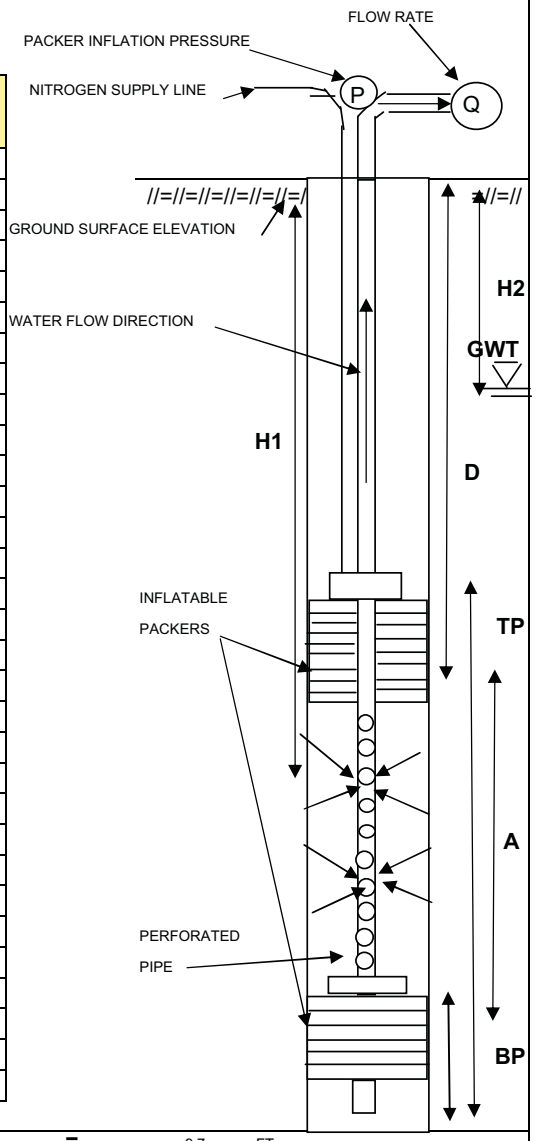

NOTE: Due to time constraints and low yield, full recovery could not be achieved at this interval.

LEGEND:			
A - TOTAL LENGTH OF TEST SECTION (FT)	=	9.7	FT
TP - TOTAL LENGTH OF TOP PACKER AND ASSEMBLY	=	16.74	FT
BP - TOTAL LENGTH OF BOTTOM PACKER AND ASSEMBLY	=	4.13	FT
D - DISTANCE BETWEEN GROUND SURFACE AND TOP OF THE TEST ZONE	=	18.5	FT
PIP - PACKER INFLATION PRESSURE (D PSI **+ 50 PSI**)	=	150	PSI
H1- DISTANCE BETWEEN WATER PRESSURE GAUGE AND GROUND SURFACE	=	29.8	FT
H2- DISTANCE BETWEEN GROUND SURFACE AND GROUND WATER TABLE	=	14.00	FT

GZA

BORING NO. /TEST NO. MW-52 T15

PACKER TEST LOG

GZA GEOENVIRONMENTAL OF NEW YORK 440 NINTH AVENUE, 18th FLOOR NEW YORK, NEW YORK 10001 SCIENTISTS AND ENGINEERS	Client Entergy Indian Point Energy Cente Buchanan, NY	BORING NO./TEST NO.	MW-52 T16
		SHEET	1 of 1
		FILE NO.	41.0017869.01
		PROJECT LOCATION	Indian Point

CONTRACTOR	Aquifer Drilling & Testing, Inc.	BORING COORDINATES	N 463253.9453	E 604733.0454	
FOREMAN	Ed Borner	GROUND SURFACE EL.(FT)	16.77	DATUM	NGVD 29
GZA ENG.	Sara Covelli	FINAL BORING DEPTH (FT)	193.0	DATE START/END	6/6/06
DIAMETER OF DRILLED BOREHOLE	3.83 INCH	GROUND WATER DEPTH (STATIC WATER LEVEL DEPTH)	13.13 (from ground)	0.43 FT ground to casing	
I.D. OF DRILLING RODS	2 INCH				

TESTED INTERVAL FROM / TO (FT)	TIME (HR:MIN)	ELAPSED TIME (Δt MIN)	DEPTH UNDER WATER (FT)	DEPTH TO WATER (FT)	CUMULATIVE RECOVERY (ΔH FT)	RECOVERY RATE (ΔH/Δt)
12.5-22.2	1314	0	4.637	19.36	0.00	-
L= 9.7 ft	1315	1	4.680	19.32	0.04	0.04300
	1316	2	4.694	19.31	0.06	0.02850
	1317	3	4.723	19.28	0.09	0.02867
	1318	4	4.752	19.25	0.11	0.02875
	1319	5	4.780	19.22	0.14	0.02860
	1320	6	4.809	19.19	0.17	0.02867
	1321	7	4.837	19.16	0.20	0.02857
	1322	8	4.852	19.15	0.22	0.02688
	1323	9	4.880	19.12	0.24	0.02700
	1324	10	4.909	19.09	0.27	0.02720
	1325	11	4.923	19.08	0.29	0.02600
	1326	12	4.938	19.06	0.30	0.02508
	1327	13	4.966	19.03	0.33	0.02531
	1328	14	4.995	19.01	0.36	0.02557
	1329	15	5.009	18.99	0.37	0.02480
	1334	20	5.138	18.86	0.50	0.02505
	1339	25	5.281	18.72	0.64	0.02576
	1344	30	5.396	18.60	0.76	0.02530
	1349	35	5.510	18.49	0.87	0.02494
	1354	40	5.610	18.39	0.97	0.02433
	1359	45	5.710	18.29	1.07	0.02384

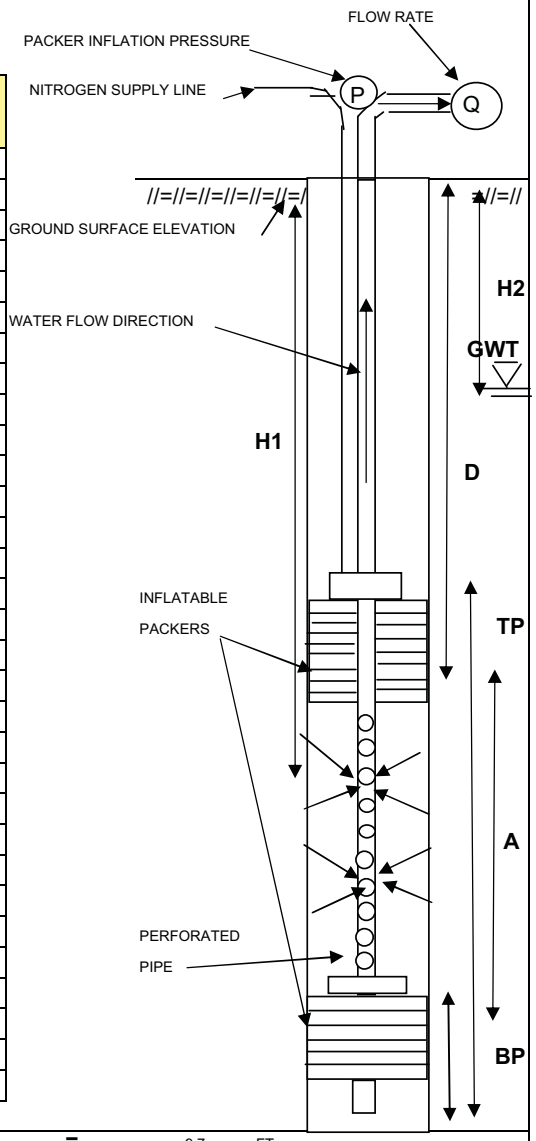

NOTE: Due to time constraints and low yield, full recovery could not be achieved at this interval.

LEGEND:			
A - TOTAL LENGTH OF TEST SECTION (FT)	=	9.7	FT
TP - TOTAL LENGTH OF TOP PACKER AND ASSEMBLY	=	16.74	FT
BP - TOTAL LENGTH OF BOTTOM PACKER AND ASSEMBLY	=	4.13	FT
D - DISTANCE BETWEEN GROUND SURFACE AND TOP OF THE TEST ZONE	=	12.5	FT
PIP - PACKER INFLATION PRESSURE (D PSI **+ 50 PSI**)	=	150	PSI
H1- DISTANCE BETWEEN WATER PRESSURE GAUGE AND GROUND SURFACE	=	24	FT
H2- DISTANCE BETWEEN GROUND SURFACE AND GROUND WATER TABLE	=	13.13	FT

GZA

BORING NO. /TEST NO. MW-52 T16

PACKER TEST LOG

GZA GEOENVIRONMENTAL OF NEW YORK 440 NINTH AVENUE, 18th FLOOR NEW YORK, NEW YORK 10001 SCIENTISTS AND ENGINEERS	Client Entergy Indian Point Energy Cente Buchanan, NY	BORING NO./TEST NO.	MW-54 T1
		SHEET	1 of 1
		FILE NO.	41.0017869.01
		PROJECT LOCATION	Indian Point

CONTRACTOR	Aquifer Drilling & Testing, Inc.	BORING COORDINATES	N 462935.7461	E 604551.9223	
FOREMAN	Paul Gaddis	GROUND SURFACE EL.(FT)	14.99	DATUM	NGVD 29
GZA ENG.	Sara Covelli	FINAL BORING DEPTH (FT)	206	DATE START/END	9/26/06
DIAMETER OF DRILLED BOREHOLE	3.83 INCH	GROUND WATER DEPTH (STATIC WATER LEVEL DEPTH)	9.34 (below grade)	0.75 FT ground to casing	
I.D. OF DRILLING RODS	2 INCH				

TESTED INTERVAL FROM / TO (FT)	TIME (HR:MIN)	ELAPSED TIME (Δt MIN)	DEPTH UNDER WATER (FT)	DEPTH TO WATER (FT)	CUMULATIVE RECOVERY (ΔH FT)	RECOVERY RATE (ΔH/Δt)
casing to 24.0	1135	0	0.605	19.72	0.00	-
L= 3 ft	1136	1	1.006	19.31	0.40	0.40100
	1137	2	1.365	18.96	0.76	0.38000
	1138	3	1.752	18.57	1.15	0.38233
	1139	4	2.197	18.12	1.59	0.39800
	1140	5	2.498	17.82	1.89	0.37860
	1141	6	2.886	17.43	2.28	0.38017
	1142	7	3.172	17.15	2.57	0.36671
	1143	8	3.517	16.80	2.91	0.36400
	1144	9	3.847	16.47	3.24	0.36022
	1145	10	4.162	16.16	3.56	0.35570
	1146	11	4.478	15.84	3.87	0.35209
	1147	12	4.793	15.53	4.19	0.34900
	1148	13	5.109	15.21	4.50	0.34646
	1149	14	5.525	14.80	4.92	0.35143
	1150	15	5.683	14.64	5.08	0.33853
	1151	16	6.027	14.29	5.42	0.33888
	1152	17	6.329	13.99	5.72	0.33671
	1153	18	6.730	13.59	6.13	0.34028
	1154	19	7.046	13.27	6.44	0.33900
	1155	20	7.361	12.96	6.76	0.33780
	1200	21	8.466	11.85	7.86	0.37433
	1205	26	9.442	10.88	8.84	0.33988
	1210	31	10.231	10.09	9.63	0.31052
	1215	36	10.920	9.40	10.32	0.28653
	1220	41	11.494	8.83	10.89	0.26559
	1225	46	11.982	8.34	11.38	0.24733
	1230	51	12.398	7.92	11.79	0.23124
	1240	61	13.015	7.31	12.41	0.20344
	1250	71	13.445	6.88	12.84	0.18085
	1305	86	13.818	6.50	13.21	0.15364

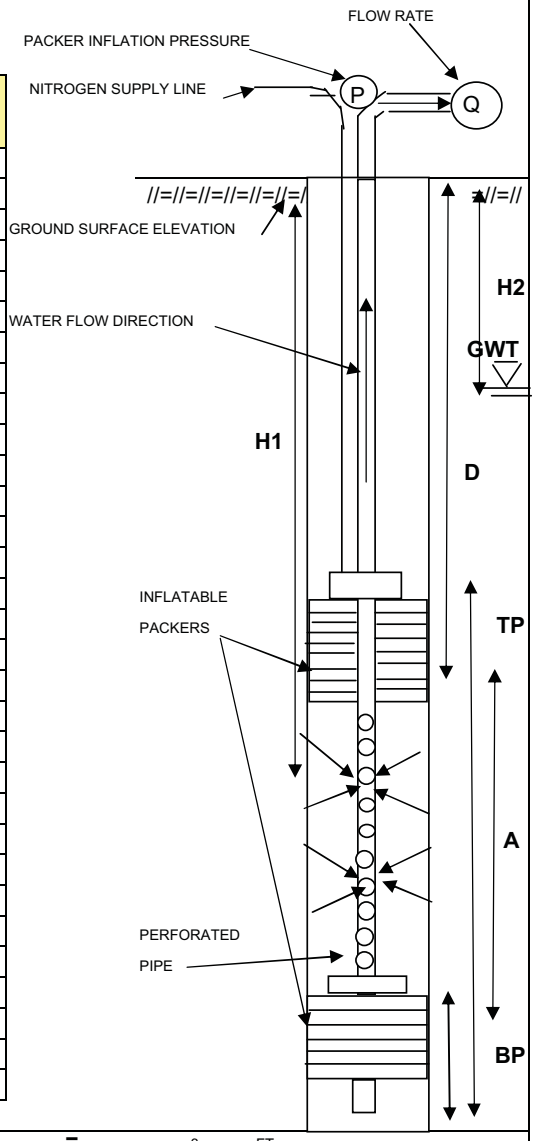

LEGEND:				
	A - TOTAL LENGTH OF TEST SECTION (FT)	=	3	FT
	TP - TOTAL LENGTH OF TOP PACKER AND ASSEMBLY	=	15.7	FT
	BP - TOTAL LENGTH OF BOTTOM PACKER AND ASSEMBLY	=	4.65	FT
	D - DISTANCE BETWEEN GROUND SURFACE AND TOP OF THE TEST ZONE	=	21.0	FT
	PIP - PACKER INFLATION PRESSURE (D PSI **+ 50 PSI**)	=	185	PSI
	H1- DISTANCE BETWEEN WATER PRESSURE GAUGE AND GROUND SURFACE	=	20.32	FT
	H2- DISTANCE BETWEEN GROUND SURFACE AND GROUND WATER TABLE	=	9.34	FT

NOTE: Only the bottom packer was inflated for this test. The interval tested here may be considered from bottom of casing to 24.0 b/g.

PACKER TEST LOG

GZA GEOENVIRONMENTAL OF NEW YORK 440 NINTH AVENUE, 18th FLOOR NEW YORK, NEW YORK 10001 SCIENTISTS AND ENGINEERS	Client Entergy Indian Point Energy Cente Buchanan, NY	BORING NO./TEST NO.	MW-54 T2
		SHEET	1 of 1
		FILE NO.	41.0017869.01
		PROJECT LOCATION	Indian Point

CONTRACTOR	Aquifer Drilling & Testing, Inc.	BORING COORDINATES	N 462935.7461	E 604551.9223	
FOREMAN	Paul Gaddis	GROUND SURFACE EL.(FT)	14.99	DATUM	NGVD 29
GZA ENG.	Sara Covelli	FINAL BORING DEPTH (FT)	206	DATE START/END	9/26/06
DIAMETER OF DRILLED BOREHOLE	3.83 INCH	GROUND WATER DEPTH (STATIC WATER LEVEL DEPTH)	8.95 (below grade)	0.75 FT ground to casing	
I.D. OF DRILLING RODS	2 INCH				

TESTED INTERVAL FROM / TO (FT)	TIME (HR:MIN)	ELAPSED TIME (Δt MIN)	DEPTH UNDER WATER (FT)	DEPTH TO WATER (FT)	CUMULATIVE RECOVERY (ΔH FT)	RECOVERY RATE (ΔH/Δt)
24.0-33.9	1411	0	4.578	25.52	0.00	-
L= 9.7 ft	1412	1	8.997	21.10	4.42	4.41900
	1413	2	10.504	19.60	5.93	2.96300
	1414	3	11.896	18.20	7.32	2.43933
	1415	4	13.158	16.94	8.58	2.14500
	1416	5	14.292	15.81	9.71	1.94280
	1417	6	15.354	14.75	10.78	1.79600
	1418	7	16.287	13.81	11.71	1.67271
	1419	8	17.119	12.98	12.54	1.56763
	1420	9	17.837	12.26	13.26	1.47322
	1421	10	18.468	11.63	13.89	1.38900
	1422	11	18.999	11.10	14.42	1.31100
	1423	12	19.444	10.66	14.87	1.23883
	1424	13	19.817	10.28	15.24	1.17223
	1425	14	20.147	9.95	15.57	1.11207
	1426	15	20.420	9.68	15.84	1.05613
	1427	16	20.635	9.47	16.06	1.00356
	1428	17	20.822	9.28	16.24	0.95553
	1429	18	20.966	9.13	16.39	0.91044
	1430	19	21.066	9.03	16.49	0.86779
	1431	20	21.152	8.95	16.57	0.82870

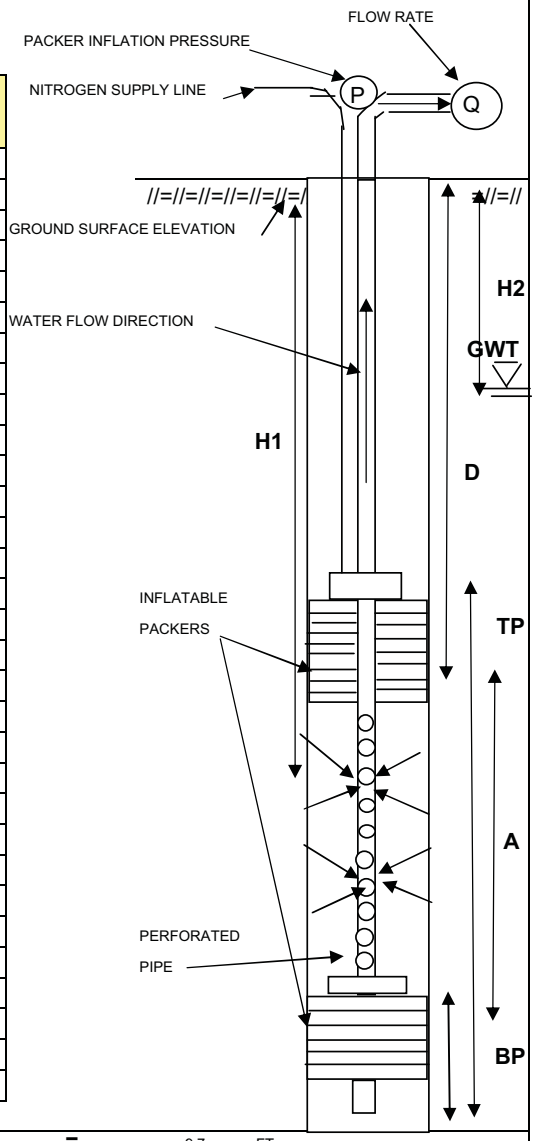

LEGEND:				
	A - TOTAL LENGTH OF TEST SECTION (FT)	=	9.7	FT
	TP - TOTAL LENGTH OF TOP PACKER AND ASSEMBLY	=	15.7	FT
	BP - TOTAL LENGTH OF BOTTOM PACKER AND ASSEMBLY	=	4.65	FT
	D - DISTANCE BETWEEN GROUND SURFACE AND TOP OF THE TEST ZONE	=	24.0	FT
	PIP - PACKER INFLATION PRESSURE (D PSI **+ 50 PSI**)	=	190	PSI
	H1- DISTANCE BETWEEN WATER PRESSURE GAUGE AND GROUND SURFACE	=	30.1	FT
	H2- DISTANCE BETWEEN GROUND SURFACE AND GROUND WATER TABLE	=	8.95	FT

GZA

BORING NO. /TEST NO. MW-54 T2

PACKER TEST LOG

GZA GEOENVIRONMENTAL OF NEW YORK 440 NINTH AVENUE, 18th FLOOR NEW YORK, NEW YORK 10001 SCIENTISTS AND ENGINEERS	Client Entergy Indian Point Energy Cente Buchanan, NY	BORING NO./TEST NO.	MW-54 T3
		SHEET	1 of 1
		FILE NO.	41.0017869.01
		PROJECT LOCATION	Indian Point

CONTRACTOR	Aquifer Drilling & Testing, Inc.	BORING COORDINATES	N 462935.7461	E 604551.9223	
FOREMAN	Paul Gaddis	GROUND SURFACE EL.(FT)	14.99	DATUM	NGVD 29
GZA ENG.	Sara Covelli	FINAL BORING DEPTH (FT)	206	DATE START/END	9/27/06
DIAMETER OF DRILLED BOREHOLE	3.83 INCH	GROUND WATER DEPTH (STATIC WATER LEVEL DEPTH)	9.39 (below grade)	0.75 FT ground to casing	
I.D. OF DRILLING RODS	2 INCH				

TESTED INTERVAL FROM / TO (FT)	TIME (HR:MIN)	ELAPSED TIME (Δt MIN)	DEPTH UNDER WATER (FT)	DEPTH TO WATER (FT)	CUMULATIVE RECOVERY (ΔH FT)	RECOVERY RATE (ΔH/Δt)
35.1-44.8	1110	0	17.191	23.71	0.00	-
L= 9.7 ft	1111	1	19.645	21.26	2.45	2.45400
	1112	2	22.286	18.61	5.10	2.54750
	1113	3	24.382	16.52	7.19	2.39700
	1114	4	26.119	14.78	8.93	2.23200
	1115	5	27.497	13.40	10.31	2.06120
	1116	6	28.559	12.34	11.37	1.89467
	1117	7	29.392	11.51	12.20	1.74300
	1118	8	30.096	10.80	12.91	1.61313
	1119	9	30.641	10.26	13.45	1.49444
	1120	10	31.086	9.81	13.90	1.38950
	1121	11	31.416	9.48	14.23	1.29318
	1122	12	31.689	9.21	14.50	1.20817
	1123	13	31.919	8.98	14.73	1.13292
	1124	14	32.077	8.82	14.89	1.06329

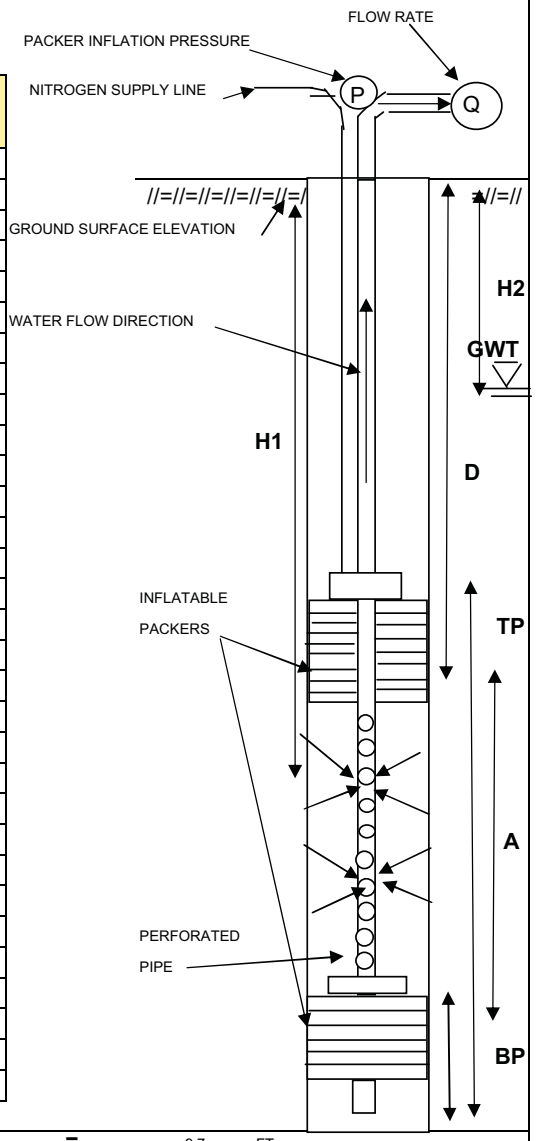

LEGEND:				
A - TOTAL LENGTH OF TEST SECTION (FT)	=	9.7	FT
TP - TOTAL LENGTH OF TOP PACKER AND ASSEMBLY	=	15.7	FT
BP - TOTAL LENGTH OF BOTTOM PACKER AND ASSEMBLY	=	4.65	FT
D - DISTANCE BETWEEN GROUND SURFACE AND TOP OF THE TEST ZONE	=	35.1	FT
PIP - PACKER INFLATION PRESSURE (D PSI **+ 50 PSI**)	=	185	PSI
H1- DISTANCE BETWEEN WATER PRESSURE GAUGE AND GROUND SURFACE	=	40.9	FT
H2- DISTANCE BETWEEN GROUND SURFACE AND GROUND WATER TABLE	=	9.39	FT

GZA

BORING NO. /TEST NO. MW-54 T3

PACKER TEST LOG

GZA GEOENVIRONMENTAL OF NEW YORK 440 NINTH AVENUE, 18th FLOOR NEW YORK, NEW YORK 10001 SCIENTISTS AND ENGINEERS	Client Entergy Indian Point Energy Cente Buchanan, NY	BORING NO./TEST NO. MW-54 T4 SHEET 1 of 1 FILE NO. 41.0017869.01 PROJECT LOCATION Indian Point

CONTRACTOR	Aquifer Drilling & Testing, Inc.	BORING COORDINATES	N 462935.7461	E 604551.9223	
FOREMAN	Paul Gaddis	GROUND SURFACE EL.(FT)	14.99	DATUM	NGVD 29
GZA ENG.	Sara Covelli	FINAL BORING DEPTH (FT)	206	DATE START/END	9/27/06
DIAMETER OF DRILLED BOREHOLE	3.83 INCH	GROUND WATER DEPTH (STATIC WATER LEVEL DEPTH)	9.10 (below grade)	0.75 FT ground to casing	
I.D. OF DRILLING RODS	2 INCH				

TESTED INTERVAL FROM / TO (FT)	TIME (HR:MIN)	ELAPSED TIME (Δt MIN)	DEPTH UNDER WATER (FT)	DEPTH TO WATER (FT)	CUMULATIVE RECOVERY (ΔH FT)	RECOVERY RATE (ΔH/Δt)
44.8-54.5	1222	0	26.679	23.80	0.00	-
L= 9.7 ft	1223	1	29.837	20.64	3.16	3.15800
	1224	2	32.422	18.06	5.74	2.87150
	1225	3	34.504	15.98	7.83	2.60833
	1226	4	36.198	14.28	9.52	2.37975
	1227	5	37.562	12.92	10.88	2.17660
	1228	6	38.639	11.84	11.96	1.99333
	1229	7	39.458	11.02	12.78	1.82557
	1230	8	40.119	10.36	13.44	1.68000
	1231	9	40.621	9.86	13.94	1.54911
	1232	10	41.023	9.46	14.34	1.43440
	1233	11	41.311	9.17	14.63	1.33018
	1234	12	41.540	8.94	14.86	1.23842
	1235	13	41.713	8.77	15.03	1.15646
	1236	14	41.828	8.65	15.15	1.08207
	1237	15	41.943	8.54	15.26	1.01760
	1238	16	42.014	8.47	15.34	0.95844
	1239	17	42.072	8.41	15.39	0.90547

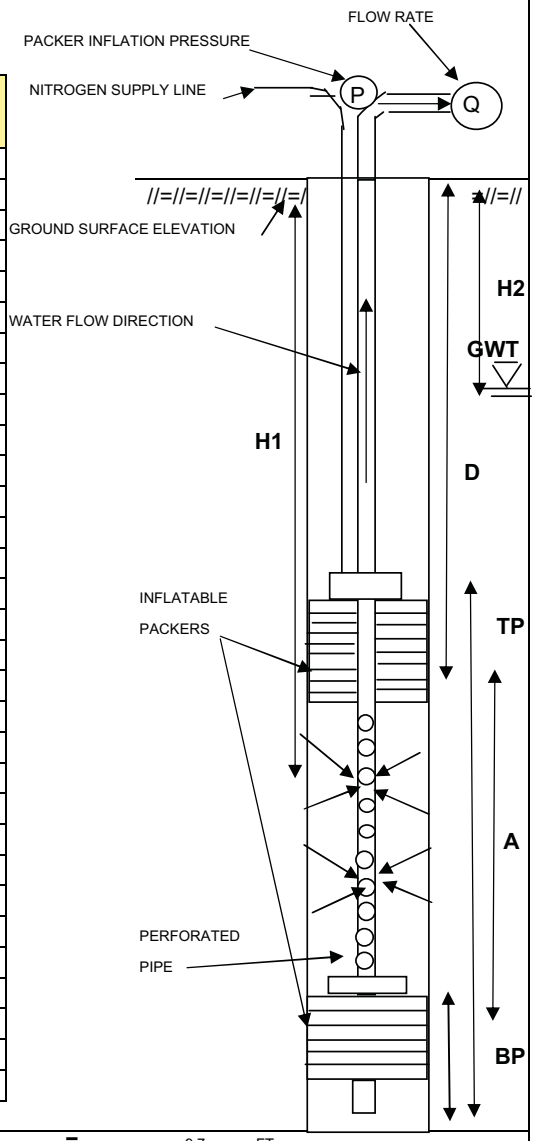

LEGEND:				
A - TOTAL LENGTH OF TEST SECTION (FT)	=	9.7	FT
TP - TOTAL LENGTH OF TOP PACKER AND ASSEMBLY	=	15.7	FT
BP - TOTAL LENGTH OF BOTTOM PACKER AND ASSEMBLY	=	4.65	FT
D - DISTANCE BETWEEN GROUND SURFACE AND TOP OF THE TEST ZONE	=	44.8	FT
PIP - PACKER INFLATION PRESSURE (D PSI **+ 50 PSI**)	=	180	PSI
H1- DISTANCE BETWEEN WATER PRESSURE GAUGE AND GROUND SURFACE	=	50.48	FT
H2- DISTANCE BETWEEN GROUND SURFACE AND GROUND WATER TABLE	=	9.1	FT

GZA

BORING NO. /TEST NO. MW-54 T4

PACKER TEST LOG

GZA GEOENVIRONMENTAL OF NEW YORK 440 NINTH AVENUE, 18th FLOOR NEW YORK, NEW YORK 10001 SCIENTISTS AND ENGINEERS	Client Entergy Indian Point Energy Cente Buchanan, NY	BORING NO./TEST NO. MW-54 T5 SHEET 1 of 1 FILE NO. 41.0017869.01 PROJECT LOCATION Indian Point

CONTRACTOR	Aquifer Drilling & Testing, Inc.	BORING COORDINATES	N 462935.7461	E 604551.9223	
FOREMAN	Paul Gaddis	GROUND SURFACE EL.(FT)	14.99	DATUM	NGVD 29
GZA ENG.	Sara Covelli	FINAL BORING DEPTH (FT)	206	DATE START/END	9/27/06
DIAMETER OF DRILLED BOREHOLE	3.83 INCH	GROUND WATER DEPTH (STATIC WATER LEVEL DEPTH)	8.79 (below grade)	0.75 FT ground to casing	
I.D. OF DRILLING RODS	2 INCH				

TESTED INTERVAL FROM / TO (FT)	TIME (HR:MIN)	ELAPSED TIME (Δt MIN)	DEPTH UNDER WATER (FT)	DEPTH TO WATER (FT)	CUMULATIVE RECOVERY (ΔH FT)	RECOVERY RATE (ΔH/Δt)
54.5-64.2	1415	0	35.695	24.43	0.00	-
L= 9.7 ft	1416	1	37.720	22.40	2.03	2.02500
	1417	2	39.487	20.63	3.79	1.89600
	1418	3	41.038	19.08	5.34	1.78100
	1419	4	42.417	17.70	6.72	1.68050
	1420	5	43.666	16.45	7.97	1.59420
	1421	6	44.772	15.35	9.08	1.51283
	1422	7	45.763	14.36	10.07	1.43829
	1423	8	46.711	13.41	11.02	1.37700
	1424	9	47.516	12.60	11.82	1.31344
	1425	10	48.220	11.90	12.53	1.25250
	1426	11	48.852	11.27	13.16	1.19609
	1427	12	49.398	10.72	13.70	1.14192
	1428	13	49.858	10.26	14.16	1.08946
	1429	14	50.245	9.88	14.55	1.03929
	1430	15	50.576	9.54	14.88	0.99207
	1431	16	50.834	9.29	15.14	0.94619
	1432	17	51.079	9.04	15.38	0.90494
	1433	18	51.280	8.84	15.59	0.86583
	1434	19	51.424	8.70	15.73	0.82784
	1435	20	51.567	8.55	15.87	0.79360

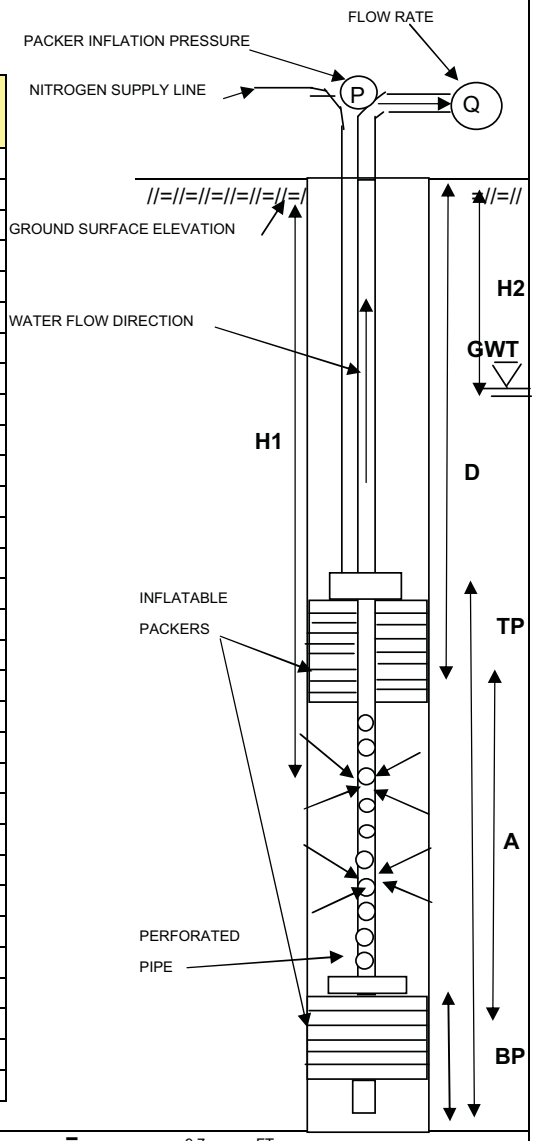

LEGEND:				
A - TOTAL LENGTH OF TEST SECTION (FT)	=	9.7	FT
TP - TOTAL LENGTH OF TOP PACKER AND ASSEMBLY	=	15.7	FT
BP - TOTAL LENGTH OF BOTTOM PACKER AND ASSEMBLY	=	4.65	FT
D - DISTANCE BETWEEN GROUND SURFACE AND TOP OF THE TEST ZONE	=	54.5	FT
PIP - PACKER INFLATION PRESSURE (D PSI **+ 50 PSI**)	=	180	PSI
H1- DISTANCE BETWEEN WATER PRESSURE GAUGE AND GROUND SURFACE	=	60.12	FT
H2- DISTANCE BETWEEN GROUND SURFACE AND GROUND WATER TABLE	=	8.79	FT

GZA

BORING NO. /TEST NO. MW-54 T5

PACKER TEST LOG

GZA GEOENVIRONMENTAL OF NEW YORK 440 NINTH AVENUE, 18th FLOOR NEW YORK, NEW YORK 10001 SCIENTISTS AND ENGINEERS	Client Entergy Indian Point Energy Cente Buchanan, NY	BORING NO./TEST NO.	MW-54 T6
		SHEET	1 of 1
		FILE NO.	41.0017869.01
		PROJECT LOCATION	Indian Point

CONTRACTOR	Aquifer Drilling & Testing, Inc.	BORING COORDINATES	N 462935.7461	E 604551.9223	
FOREMAN	Paul Gaddis	GROUND SURFACE EL.(FT)	14.99	DATUM	NGVD 29
GZA ENG.	Sara Covelli	FINAL BORING DEPTH (FT)	206	DATE START/END	9/28/06
DIAMETER OF DRILLED BOREHOLE	3.83 INCH	GROUND WATER DEPTH (STATIC WATER LEVEL DEPTH)	9.12 (below grade)	0.75 FT ground to casing	
I.D. OF DRILLING RODS	2 INCH				

TESTED INTERVAL FROM / TO (FT)	TIME (HR:MIN)	ELAPSED TIME (Δt MIN)	DEPTH UNDER WATER (FT)	DEPTH TO WATER (FT)	CUMULATIVE RECOVERY (ΔH FT)	RECOVERY RATE (ΔH/Δt)
64.2-73.9	902	0	45.821	23.73	0.00	-
L= 9.7 ft	903	1	47.257	22.29	1.44	1.43600
	904	2	48.622	20.93	2.80	1.40050
	905	3	49.843	19.71	4.02	1.34067
	906	4	50.949	18.60	5.13	1.28200
	907	5	51.941	17.61	6.12	1.22400
	908	6	52.846	16.70	7.03	1.17083
	909	7	53.665	15.89	7.84	1.12057
	910	8	54.398	15.15	8.58	1.07213
	911	9	55.059	14.49	9.24	1.02644
	912	10	55.705	13.85	9.88	0.98840
	913	11	56.266	13.28	10.45	0.94955
	914	12	56.826	12.72	11.01	0.91708
	915	13	57.329	12.22	11.51	0.88523
	916	14	57.774	11.78	11.95	0.85379
	917	15	58.206	11.34	12.39	0.82567
	918	16	58.622	10.93	12.80	0.80006
	919	17	58.967	10.58	13.15	0.77329
	920	18	59.269	10.28	13.45	0.74711
	921	19	59.542	10.01	13.72	0.72216
	922	20	59.786	9.76	13.97	0.69825
	923	21	60.031	9.52	14.21	0.67667
	924	22	60.232	9.32	14.41	0.65505
	925	23	60.404	9.15	14.58	0.63404
	926	24	60.562	8.99	14.74	0.61421
	927	25	60.720	8.83	14.90	0.59596
	928	26	60.850	8.70	15.03	0.57804
	933	31	61.310	8.24	15.49	0.49965
	938	36	61.568	7.98	15.75	0.43742
	943	41	61.784	7.77	15.96	0.38934
	948	46	61.870	7.68	16.05	0.34889

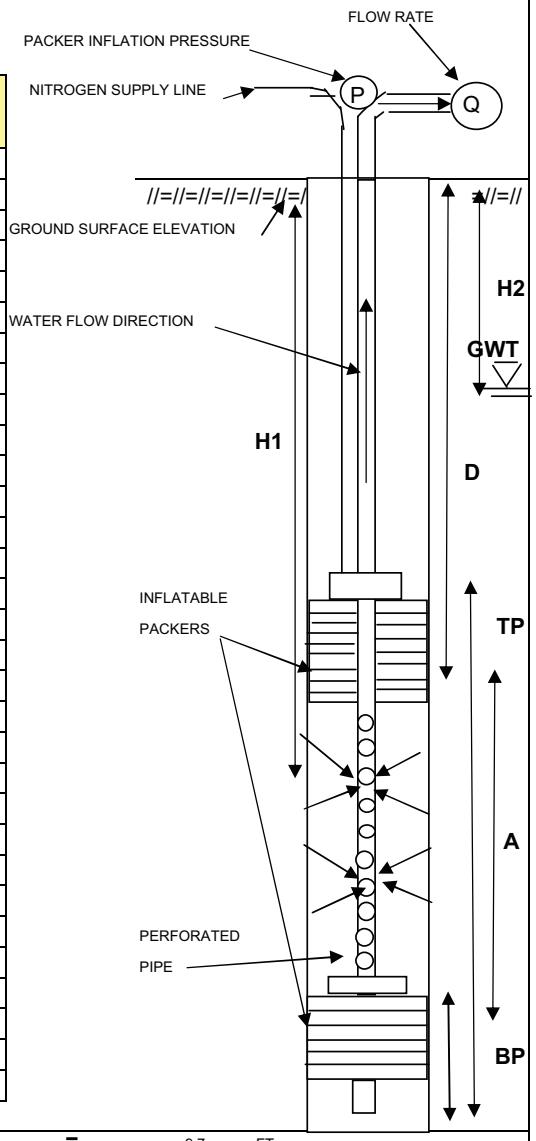

LEGEND:				
	A - TOTAL LENGTH OF TEST SECTION (FT)	=	9.7	FT
	TP - TOTAL LENGTH OF TOP PACKER AND ASSEMBLY	=	15.7	FT
	BP - TOTAL LENGTH OF BOTTOM PACKER AND ASSEMBLY	=	4.65	FT
	D - DISTANCE BETWEEN GROUND SURFACE AND TOP OF THE TEST ZONE	=	64.2	FT
	PIP - PACKER INFLATION PRESSURE (D PSI **+ 50 PSI**)	=	180	PSI
	H1- DISTANCE BETWEEN WATER PRESSURE GAUGE AND GROUND SURFACE	=	69.55	FT
	H2- DISTANCE BETWEEN GROUND SURFACE AND GROUND WATER TABLE	=	9.12	FT

GZA

BORING NO. /TEST NO. MW-54 T6

PACKER TEST LOG

GZA GEOENVIRONMENTAL OF NEW YORK 440 NINTH AVENUE, 18th FLOOR NEW YORK, NEW YORK 10001 SCIENTISTS AND ENGINEERS	Client Entergy Indian Point Energy Cente Buchanan, NY	BORING NO./TEST NO.	MW-54 T7
		SHEET	1 of 1
		FILE NO.	41.0017869.01
		PROJECT LOCATION	Indian Point

CONTRACTOR	Aquifer Drilling & Testing, Inc.	BORING COORDINATES	N 462935.7461	E 604551.9223	
FOREMAN	Paul Gaddis	GROUND SURFACE EL.(FT)	14.99	DATUM	NGVD 29
GZA ENG.	Sara Covelli	FINAL BORING DEPTH (FT)	206	DATE START/END	9/28/06
DIAMETER OF DRILLED BOREHOLE	3.83 INCH	GROUND WATER DEPTH (STATIC WATER LEVEL DEPTH)	9.34 (below grade)	0.75 FT ground to casing	
I.D. OF DRILLING RODS	2 INCH				

TESTED INTERVAL FROM / TO (FT)	TIME (HR:MIN)	ELAPSED TIME (Δt MIN)	DEPTH UNDER WATER (FT)	DEPTH TO WATER (FT)	CUMULATIVE RECOVERY (ΔH FT)	RECOVERY RATE (ΔH/Δt)
73.9-83.6	1033	0	54.211	25.12	0.00	-
L= 9.7 ft	1034	1	55.073	24.26	0.86	0.86200
	1035	2	55.863	23.47	1.65	0.82600
	1036	3	56.582	22.75	2.37	0.79033
	1037	4	57.228	22.10	3.02	0.75425
	1038	5	57.832	21.50	3.62	0.72420
	1039	6	58.364	20.97	4.15	0.69217
	1040	7	58.852	20.48	4.64	0.66300
	1041	8	59.312	20.02	5.10	0.63763
	1042	9	59.743	19.59	5.53	0.61467
	1043	10	60.146	19.18	5.94	0.59350
	1044	11	60.519	18.81	6.31	0.57345
	1045	12	60.864	18.47	6.65	0.55442
	1046	13	61.209	18.12	7.00	0.53831
	1047	14	61.540	17.79	7.33	0.52350
	1048	15	61.827	17.50	7.62	0.50773
	1049	16	62.172	17.16	7.96	0.49756
	1050	17	62.445	16.89	8.23	0.48435
	1051	18	62.704	16.63	8.49	0.47183
	1052	19	63.034	16.30	8.82	0.46437
	1053	20	63.322	16.01	9.11	0.45555
	1054	21	63.595	15.74	9.38	0.44686
	1055	22	63.839	15.49	9.63	0.43764
	1056	23	64.084	15.25	9.87	0.42926
	1057	24	64.299	15.03	10.09	0.42033
	1058	25	64.500	14.83	10.29	0.41156
	1059	26	64.702	14.63	10.49	0.40350
	1100	27	64.903	14.43	10.69	0.39600
	1101	28	65.090	14.24	10.88	0.38854
	1106	33	65.938	13.39	11.73	0.35536
	1111	38	66.671	12.66	12.46	0.32789

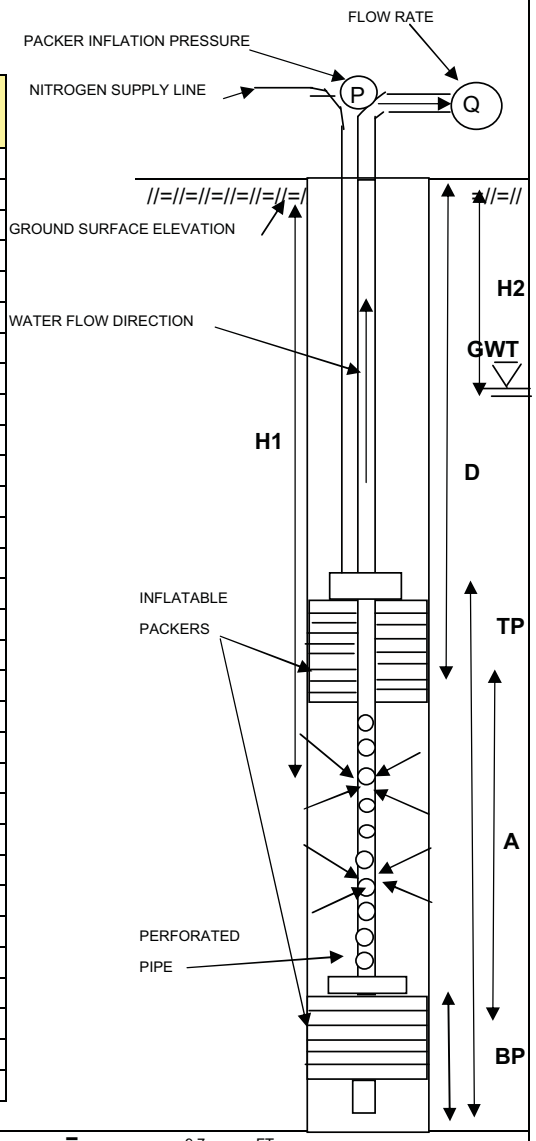

LEGEND:				
	A - TOTAL LENGTH OF TEST SECTION (FT)	=	9.7	FT
	TP - TOTAL LENGTH OF TOP PACKER AND ASSEMBLY	=	15.7	FT
	BP - TOTAL LENGTH OF BOTTOM PACKER AND ASSEMBLY	=	4.65	FT
	D - DISTANCE BETWEEN GROUND SURFACE AND TOP OF THE TEST ZONE	=	73.9	FT
	PIP - PACKER INFLATION PRESSURE (D PSI **+ 50 PSI**)	=	180	PSI
	H1- DISTANCE BETWEEN WATER PRESSURE GAUGE AND GROUND SURFACE	=	79.33	FT
	H2- DISTANCE BETWEEN GROUND SURFACE AND GROUND WATER TABLE	=	9.34	FT

GZA

BORING NO. /TEST NO. MW-54 T7

PACKER TEST LOG

GZA GEOENVIRONMENTAL OF NEW YORK 440 NINTH AVENUE, 18th FLOOR NEW YORK, NEW YORK 10001 SCIENTISTS AND ENGINEERS	Client Entergy Indian Point Energy Cente Buchanan, NY	BORING NO./TEST NO.	MW-54 T8
		SHEET	1 of 1
		FILE NO.	41.0017869.01
		PROJECT LOCATION	Indian Point

CONTRACTOR	Aquifer Drilling & Testing, Inc.	BORING COORDINATES	N 462935.7461	E 604551.9223	
FOREMAN	Paul Gaddis	GROUND SURFACE EL.(FT)	14.99	DATUM	NGVD 29
GZA ENG.	Sara Covelli	FINAL BORING DEPTH (FT)	206	DATE START/END	9/28/06
DIAMETER OF DRILLED BOREHOLE	3.83 INCH	GROUND WATER DEPTH (STATIC WATER LEVEL DEPTH)	9.15 (below grade)	0.75 FT ground to casing	
I.D. OF DRILLING RODS	2 INCH				

TESTED INTERVAL FROM / TO (FT)	TIME (HR:MIN)	ELAPSED TIME (Δt MIN)	DEPTH UNDER WATER (FT)	DEPTH TO WATER (FT)	CUMULATIVE RECOVERY (ΔH FT)	RECOVERY RATE (ΔH/Δt)
83.6-93.3	1201	0	64.285	24.83	0.00	-
L= 9.7 ft	1202	1	66.139	22.97	1.85	1.85400
	1203	2	67.763	21.35	3.48	1.73900
	1204	3	69.172	19.94	4.89	1.62900
	1205	4	70.379	18.73	6.09	1.52350
	1206	5	71.443	17.67	7.16	1.43160
	1207	6	72.407	16.70	8.12	1.35367
	1208	7	73.240	15.87	8.96	1.27929
	1209	8	74.117	14.99	9.83	1.22900
	1210	9	74.664	14.45	10.38	1.15322
	1211	10	75.268	13.84	10.98	1.09830
	1212	11	75.800	13.31	11.52	1.04682
	1213	12	76.260	12.85	11.98	0.99792
	1214	13	76.691	12.42	12.41	0.95431
	1215	14	77.079	12.03	12.79	0.91386
	1216	15	77.410	11.70	13.13	0.87500
	1217	16	77.712	11.40	13.43	0.83919
	1218	17	77.985	11.13	13.70	0.80588
	1219	18	78.244	10.87	13.96	0.77550
	1220	19	78.445	10.67	14.16	0.74526
	1221	20	78.647	10.46	14.36	0.71810
	1222	21	78.819	10.29	14.53	0.69210
	1223	22	78.977	10.13	14.69	0.66782
	1224	23	79.135	9.97	14.85	0.64565
	1225	24	79.251	9.86	14.97	0.62358
	1226	25	79.366	9.74	15.08	0.60324
	1231	30	79.797	9.31	15.51	0.51707
	1236	35	80.041	9.07	15.76	0.45017
	1241	40	80.214	8.90	15.93	0.39823
	1246	45	80.300	8.81	16.02	0.35589
	1251	50	80.343	8.77	16.06	0.32116

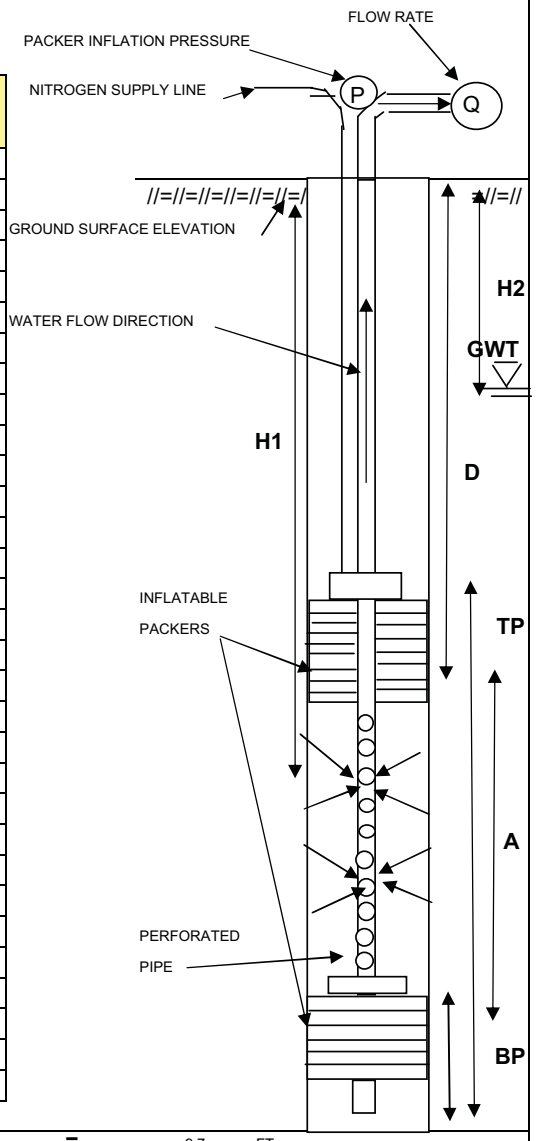

LEGEND:				
	A - TOTAL LENGTH OF TEST SECTION (FT)	=	9.7	FT
	TP - TOTAL LENGTH OF TOP PACKER AND ASSEMBLY	=	15.7	FT
	BP - TOTAL LENGTH OF BOTTOM PACKER AND ASSEMBLY	=	4.65	FT
	D - DISTANCE BETWEEN GROUND SURFACE AND TOP OF THE TEST ZONE	=	83.6	FT
	PIP - PACKER INFLATION PRESSURE (D PSI **+ 50 PSI**)	=	180	PSI
	H1- DISTANCE BETWEEN WATER PRESSURE GAUGE AND GROUND SURFACE	=	89.11	FT
	H2- DISTANCE BETWEEN GROUND SURFACE AND GROUND WATER TABLE	=	9.15	FT

GZA

BORING NO. /TEST NO. MW-54 T8

PACKER TEST LOG

GZA GEOENVIRONMENTAL OF NEW YORK 440 NINTH AVENUE, 18th FLOOR NEW YORK, NEW YORK 10001 SCIENTISTS AND ENGINEERS	Client Entergy Indian Point Energy Cente Buchanan, NY	BORING NO./TEST NO.	MW-54 T9
		SHEET	1 of 1
		FILE NO.	41.0017869.01
		PROJECT LOCATION	Indian Point

CONTRACTOR	Aquifer Drilling & Testing, Inc.	BORING COORDINATES	N 462935.7461	E 604551.9223	
FOREMAN	Paul Gaddis	GROUND SURFACE EL.(FT)	14.99	DATUM	NGVD 29
GZA ENG.	Sara Covelli	FINAL BORING DEPTH (FT)	206	DATE START/END	9/28/06
DIAMETER OF DRILLED BOREHOLE	3.83 INCH	GROUND WATER DEPTH (STATIC WATER LEVEL DEPTH)	8.89 (below grade)	0.75 FT ground to casing	
I.D. OF DRILLING RODS	2 INCH				

TESTED INTERVAL FROM / TO (FT)	TIME (HR:MIN)	ELAPSED TIME (Δt MIN)	DEPTH UNDER WATER (FT)	DEPTH TO WATER (FT)	CUMULATIVE RECOVERY (ΔH FT)	RECOVERY RATE (ΔH/Δt)
101.0-110.7	1349	0	81.408	25.08	0.00	-
L= 9.7 ft	1350	1	83.522	22.97	2.11	2.11400
	1351	2	85.506	20.98	4.10	2.04900
	1352	3	87.204	19.29	5.80	1.93200
	1353	4	88.656	17.83	7.25	1.81200
	1354	5	89.994	16.50	8.59	1.71720
	1355	6	91.116	15.37	9.71	1.61800
	1356	7	92.195	14.30	10.79	1.54100
	1357	8	92.986	13.50	11.58	1.44725
	1358	9	93.835	12.66	12.43	1.38078
	1359	10	94.454	12.04	13.05	1.30460
	1400	11	94.928	11.56	13.52	1.22909
	1401	12	95.533	10.96	14.13	1.17708
	1402	13	95.820	10.67	14.41	1.10862
	1403	14	96.281	10.21	14.87	1.06236
	1404	15	96.597	9.89	15.19	1.01260
	1405	16	96.712	9.78	15.30	0.95650
	1406	17	96.971	9.52	15.56	0.91547
	1407	18	97.273	9.22	15.87	0.88139
	1408	19	97.317	9.17	15.91	0.83732
	1409	20	97.633	8.86	16.23	0.81125

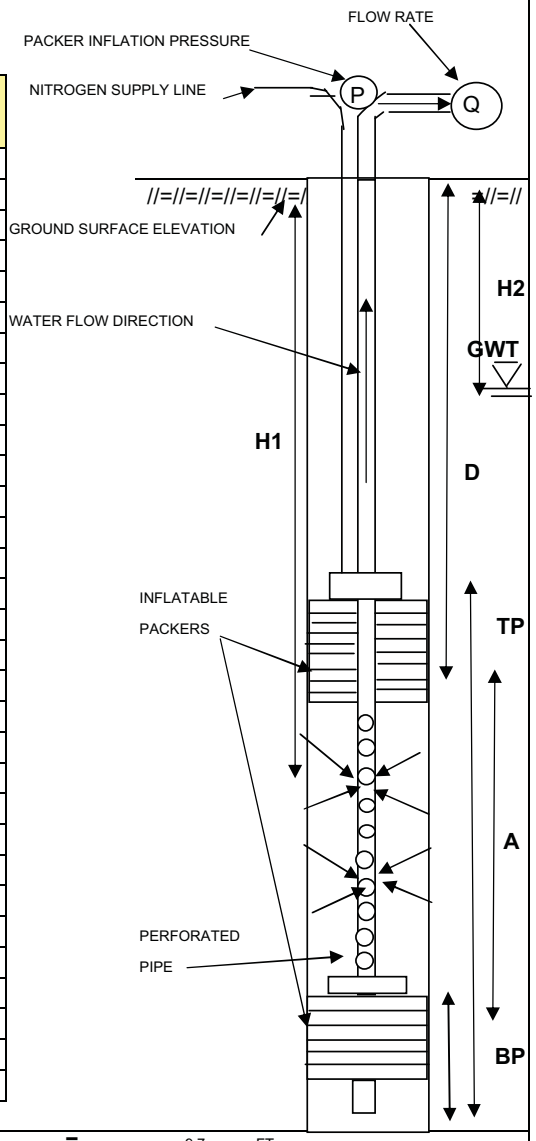

LEGEND:				
A - TOTAL LENGTH OF TEST SECTION (FT)	=	9.7	FT
TP - TOTAL LENGTH OF TOP PACKER AND ASSEMBLY	=	15.7	FT
BP - TOTAL LENGTH OF BOTTOM PACKER AND ASSEMBLY	=	4.65	FT
D - DISTANCE BETWEEN GROUND SURFACE AND TOP OF THE TEST ZONE	=	101	FT
PIP - PACKER INFLATION PRESSURE (D PSI **+ 50 PSI**)	=	180	PSI
H1- DISTANCE BETWEEN WATER PRESSURE GAUGE AND GROUND SURFACE	=	106.49	FT
H2- DISTANCE BETWEEN GROUND SURFACE AND GROUND WATER TABLE	=	8.89	FT

GZA

BORING NO. /TEST NO. MW-54 T9

PACKER TEST LOG

GZA GEOENVIRONMENTAL OF NEW YORK 440 NINTH AVENUE, 18th FLOOR NEW YORK, NEW YORK 10001 SCIENTISTS AND ENGINEERS	Client Entergy Indian Point Energy Cente Buchanan, NY	BORING NO./TEST NO.	MW-54 T10
		SHEET	1 of 1
		FILE NO.	41.0017869.01
		PROJECT LOCATION	Indian Point

CONTRACTOR	Aquifer Drilling & Testing, Inc.	BORING COORDINATES	N 462935.7461	E 604551.9223	
FOREMAN	Paul Gaddis	GROUND SURFACE EL.(FT)	14.99	DATUM	NGVD 29
GZA ENG.	Sara Covelli	FINAL BORING DEPTH (FT)	206	DATE START/END	9/29/06
DIAMETER OF DRILLED BOREHOLE	3.83 INCH	GROUND WATER DEPTH (STATIC WATER LEVEL DEPTH)	9.04 (below grade)	0.75 FT ground to casing	
I.D. OF DRILLING RODS	2 INCH				

TESTED INTERVAL FROM / TO (FT)	TIME (HR:MIN)	ELAPSED TIME (Δt MIN)	DEPTH UNDER WATER (FT)	DEPTH TO WATER (FT)	CUMULATIVE RECOVERY (ΔH FT)	RECOVERY RATE (ΔH/Δt)
110.7-120.4	814	0	90.670	25.43	0.00	-
L= 9.7 ft	815	1	93.389	22.71	2.72	2.71900
	816	2	95.676	20.42	5.01	2.50300
	817	3	97.633	18.47	6.96	2.32100
	818	4	99.302	16.80	8.63	2.15800
	819	5	100.669	15.43	10.00	1.99980
	820	6	101.835	14.27	11.17	1.86083
	821	7	102.813	13.29	12.14	1.73471
	822	8	103.662	12.44	12.99	1.62400
	823	9	104.339	11.76	13.67	1.51878
	824	10	104.929	11.17	14.26	1.42590
	825	11	105.418	10.68	14.75	1.34073
	826	12	105.835	10.27	15.17	1.26375
	827	13	106.166	9.93	15.50	1.19200
	828	14	106.454	9.65	15.78	1.12743
	829	15	106.685	9.41	16.02	1.06767

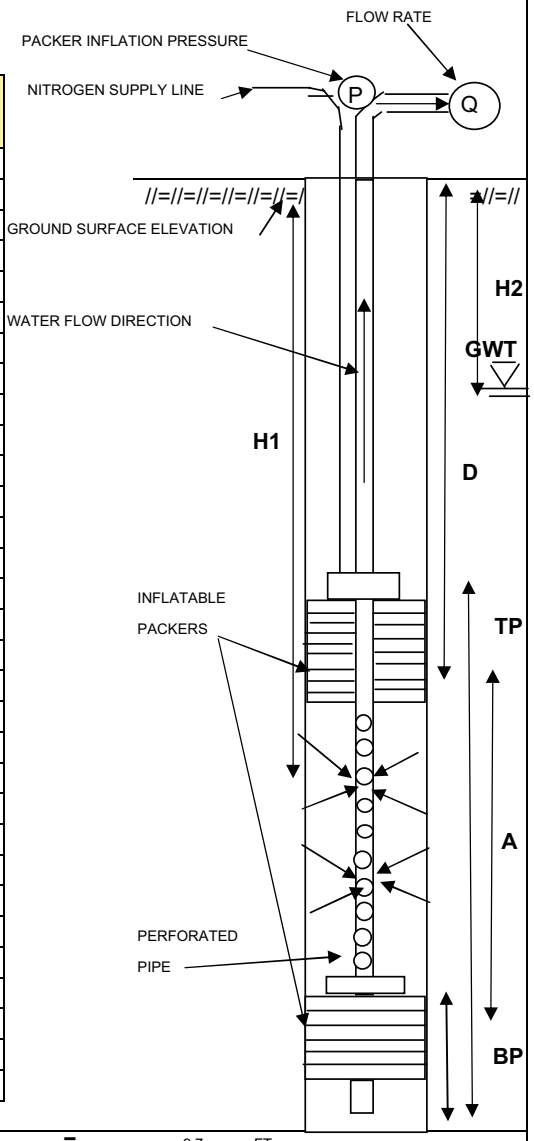

LEGEND:				
	A - TOTAL LENGTH OF TEST SECTION (FT)	=	9.7	FT
	TP - TOTAL LENGTH OF TOP PACKER AND ASSEMBLY	=	15.7	FT
	BP - TOTAL LENGTH OF BOTTOM PACKER AND ASSEMBLY	=	4.65	FT
	D - DISTANCE BETWEEN GROUND SURFACE AND TOP OF THE TEST ZONE	=	110.7	FT
	PIP - PACKER INFLATION PRESSURE (D PSI **+ 50 PSI**)	=	180	PSI
	H1- DISTANCE BETWEEN WATER PRESSURE GAUGE AND GROUND SURFACE	=	116.10	FT
	H2- DISTANCE BETWEEN GROUND SURFACE AND GROUND WATER TABLE	=	9.04	FT

GZA

BORING NO. /TEST NO. MW-54 T10

PACKER TEST LOG

GZA GEOENVIRONMENTAL OF NEW YORK 440 NINTH AVENUE, 18th FLOOR NEW YORK, NEW YORK 10001 SCIENTISTS AND ENGINEERS	Client Entergy Indian Point Energy Cente Buchanan, NY	BORING NO./TEST NO.	MW-54 T11
		SHEET	1 of 1
		FILE NO.	41.0017869.01
		PROJECT LOCATION	Indian Point

CONTRACTOR	Aquifer Drilling & Testing, Inc.	BORING COORDINATES	N 462935.7461	E 604551.9223	
FOREMAN	Paul Gaddis	GROUND SURFACE EL.(FT)	14.99	DATUM	NGVD 29
GZA ENG.	Sara Covelli	FINAL BORING DEPTH (FT)	206	DATE START/END	9/29/06
DIAMETER OF DRILLED BOREHOLE	3.83 INCH	GROUND WATER DEPTH (STATIC WATER LEVEL DEPTH)	9.19	(below grade)	0.75 FT ground to casing
I.D. OF DRILLING RODS	2 INCH				

TESTED INTERVAL FROM / TO (FT)	TIME (HR:MIN)	ELAPSED TIME (Δt MIN)	DEPTH UNDER WATER (FT)	DEPTH TO WATER (FT)	CUMULATIVE RECOVERY (ΔH FT)	RECOVERY RATE (ΔH/Δt)
120.4-130.1	10:16:00	0.0	101.115	24.77	0.00	-
L= 9.7 ft	10:16:30	0.5	104.914	20.97	3.80	7.59800
	10:17:00	1.0	109.131	16.75	8.02	8.01600
	10:17:30	1.5	111.953	13.93	10.84	7.22533
	10:18:00	2.0	113.738	12.14	12.62	6.31150
	10:18:30	2.5	114.803	11.08	13.69	5.47520
	10:19:00	3.0	115.422	10.46	14.31	4.76900
	10:19:30	3.5	115.782	10.10	14.67	4.19057
	10:20:00	4.0	115.983	9.90	14.87	3.71700
	10:20:30	4.5	116.113	9.77	15.00	3.33289
	10:21:00	5.0	116.185	9.69	15.07	3.01400
	10:21:30	5.5	116.242	9.64	15.13	2.75036
	10:22:00	6.0	116.271	9.61	15.16	2.52600
	10:22:30	6.5	116.314	9.57	15.20	2.33831
	10:23:00	7.0	116.358	9.52	15.24	2.17757

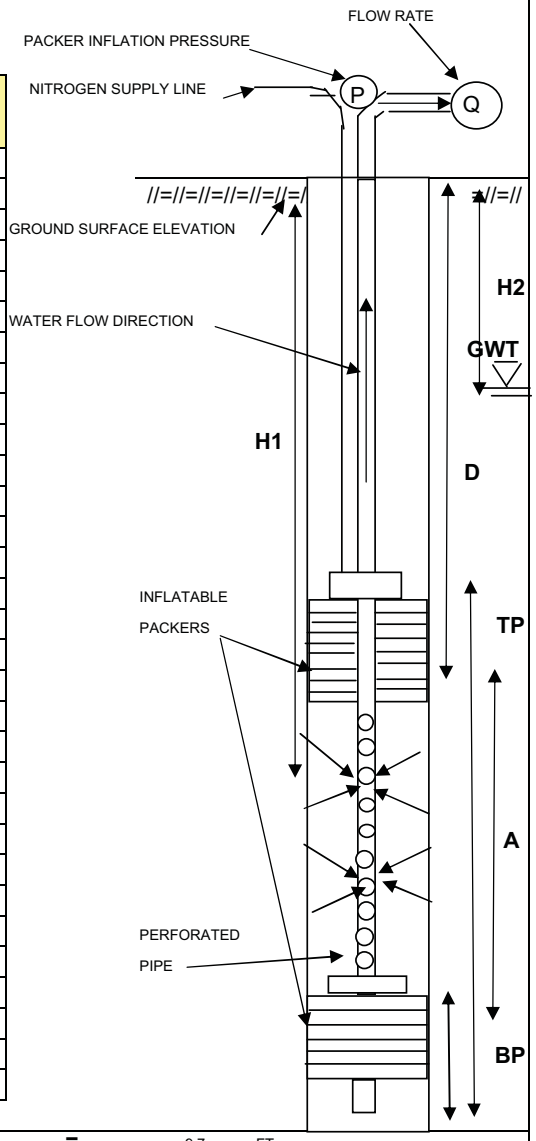

LEGEND:				
	A - TOTAL LENGTH OF TEST SECTION (FT)	=	9.7	FT
	TP - TOTAL LENGTH OF TOP PACKER AND ASSEMBLY	=	15.7	FT
	BP - TOTAL LENGTH OF BOTTOM PACKER AND ASSEMBLY	=	4.65	FT
	D - DISTANCE BETWEEN GROUND SURFACE AND TOP OF THE TEST ZONE	=	120.4	FT
	PIP - PACKER INFLATION PRESSURE (D PSI **+ 50 PSI**)	=	180	PSI
	H1- DISTANCE BETWEEN WATER PRESSURE GAUGE AND GROUND SURFACE	=	125.88	FT
	H2- DISTANCE BETWEEN GROUND SURFACE AND GROUND WATER TABLE	=	9.19	FT

NOTE: A constant head test was also run at this interval.

GZA

BORING NO. /TEST NO. MW-54 T11

PACKER TEST LOG

GZA GEOENVIRONMENTAL OF NEW YORK 440 NINTH AVENUE, 18th FLOOR NEW YORK, NEW YORK 10001 SCIENTISTS AND ENGINEERS	Client Entergy Indian Point Energy Cente Buchanan, NY	BORING NO./TEST NO. MW-54 T11 SHEET 1 of 1 FILE NO. 41.0017869.01 PROJECT LOCATION Indian Point

CONTRACTOR	Aquifer Drilling & Testing, Inc.	BORING COORDINATES	N 462935.7461	E 604551.9223	
FOREMAN	Paul Gaddis	GROUND SURFACE EL.(FT)	14.99	DATUM	NGVD 29
GZA ENG.	Sara Covelli	FINAL BORING DEPTH (FT)	206	DATE START/END	9/29/06
DIAMETER OF DRILLED BOREHOLE	3.83 INCH	GROUND WATER DEPTH (STATIC WATER LEVEL DEPTH)	9.19 FT (from manhole)		0.75 FT manhole to casing
I.D. OF DRILLING RODS	2 INCH				

TESTED INTERVAL FROM / TO (FT)	TIME (HR:MIN:SEC)	ELAPSED TIME (Δt MIN)	DEPTH UNDER WATER (FT)	DEPTH TO WATER (FT)	DRAWDOWN (ΔH FT)	PUMPING RATE (gal/min)	SPECIFIC CAPACITY (Q/s)
120.4-130.1	1028	0	100.022	25.86	16.668	2.400	0.144
L= 9.7 ft	1029	1	99.259	26.62	17.431	2.300	0.132
	1030	2	98.986	26.89	17.704	2.000	0.113
	1031	3	99.086	26.79	17.604	2.000	0.114
	1032	4	100.497	25.38	16.193	2.000	0.124
	1033	5	101.216	24.66	15.474	2.000	0.129
	1034	6	101.202	24.68	15.488	2.000	0.129
	1035	7	101.158	24.72	15.532	2.000	0.129
	1036	8	101.101	24.78	15.589	2.000	0.128
	1037	9	101.072	24.81	15.618	2.000	0.128
	1038	10	101.029	24.85	15.661	2.000	0.128
	1039	11	101.000	24.88	15.69	2.000	0.127
	1040	12	100.971	24.91	15.719	2.000	0.127
	1041	13	100.943	24.94	15.747	2.000	0.127
	1042	14	100.928	24.95	15.762	2.000	0.127
	1043	15	100.899	24.98	15.791	2.000	0.127
	1044	16	100.885	25.00	15.805	2.000	0.127
	1045	17	100.842	25.04	15.848	2.000	0.126
	1046	18	100.828	25.05	15.862	2.000	0.126
	1047	19	100.828	25.05	15.862	2.000	0.126
	1048	20	100.856	25.02	15.834	2.000	0.126
	1049	21	100.842	25.04	15.848	2.000	0.126
	1050	22	100.828	25.05	15.862	2.000	0.126
	1051	23	100.813	25.07	15.877	2.000	0.126
	1052	24	100.813	25.07	15.877	2.000	0.126
	1053	25	100.813	25.07	15.877	2.000	0.126
	1054	26	100.799	25.08	15.891	2.000	0.126
	1055	27	100.784	25.10	15.906	2.000	0.126
	1056	28	100.770	25.11	15.92	2.000	0.126
	1057	29	100.770	25.11	15.92	2.000	0.126
	1058	30	100.756	25.12	15.934	2.000	0.126

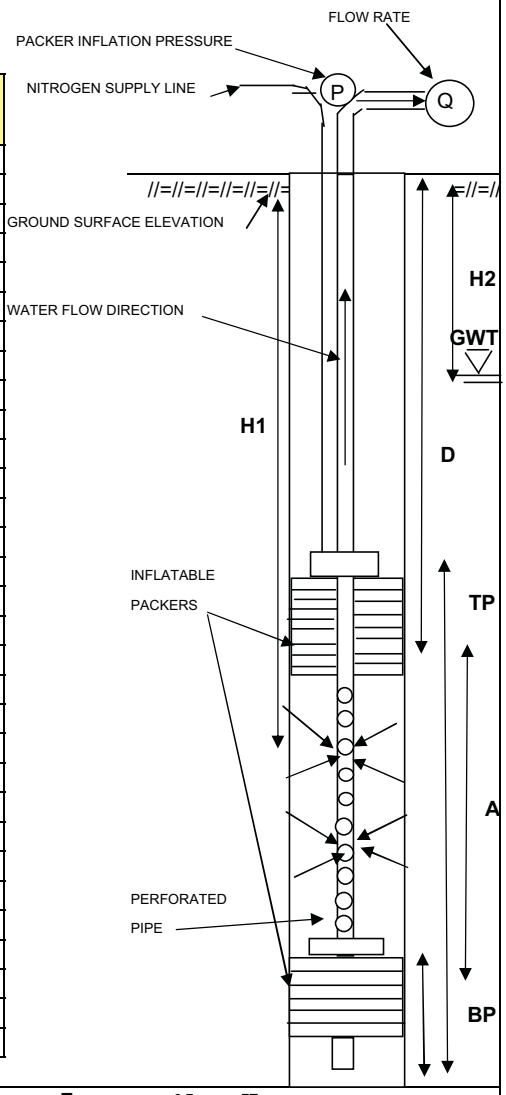

LEGEND:			
A - TOTAL LENGTH OF TEST SECTION (FT)	=	9.7	FT
TP - TOTAL LENGTH OF TOP PACKER AND ASSEMBLY	=	15.7	FT
BP - TOTAL LENGTH OF BOTTOM BACKER AND ASSEMBLY	=	4.65	FT
D - DISTANCE BETWEEN GROUND SURFACE AND TOP OF THE TEST ZONE	=	120.4	FT
PIP - PACKER INFLATION PRESSURE (D PSI **+ 50 PSI**)	=	180	PSI
H1- DISTANCE BETWEEN WATER PRESSURE GAUGE AND GROUND SURFACE	=	125.88	FT
H2- DISTANCE BETWEEN GROUND SURFACE AND GROUND WATER TABLE	=	9.19	FT

NOTE: A recovery test was also run at this interval.

GZA

BORING NO. /TEST NO. MW-54 T11

PACKER TEST LOG

GZA GEOENVIRONMENTAL OF NEW YORK 440 NINTH AVENUE, 18th FLOOR NEW YORK, NEW YORK 10001 SCIENTISTS AND ENGINEERS	Client Entergy Indian Point Energy Cente Buchanan, NY	BORING NO./TEST NO.	MW-54 T12
		SHEET	1 of 1
		FILE NO.	41.0017869.01
		PROJECT LOCATION	Indian Point

CONTRACTOR	Aquifer Drilling & Testing, Inc.	BORING COORDINATES	N 462935.7461	E 604551.9223	
FOREMAN	Paul Gaddis	GROUND SURFACE EL.(FT)	14.99	DATUM	NGVD 29
GZA ENG.	Sara Covelli	FINAL BORING DEPTH (FT)	206	DATE START/END	9/29/06
DIAMETER OF DRILLED BOREHOLE	3.83 INCH	GROUND WATER DEPTH (STATIC WATER LEVEL DEPTH)	9.25 (below grade)	0.75 FT ground to casing	
I.D. OF DRILLING RODS	2 INCH				

TESTED INTERVAL FROM / TO (FT)	TIME (HR:MIN)	ELAPSED TIME (Δt MIN)	DEPTH UNDER WATER (FT)	DEPTH TO WATER (FT)	CUMULATIVE RECOVERY (ΔH FT)	RECOVERY RATE (ΔH/Δt)
136.3-146.0	11:52:30	0.0	115.998	25.60	0.00	-
L= 9.7 ft	11:53:00	0.5	120.187	21.41	4.19	8.37800
	11:53:30	1.0	124.723	16.88	8.72	8.72500
	11:54:00	1.5	127.690	13.91	11.69	7.79467
	11:54:30	2.0	129.605	12.00	13.61	6.80350
	11:55:00	2.5	130.757	10.84	14.76	5.90360
	11:55:30	3.0	131.334	10.27	15.34	5.11200
	11:56:00	3.5	131.650	9.95	15.65	4.47200
	11:56:30	4.0	131.794	9.81	15.80	3.94900
	11:57:00	4.5	131.895	9.70	15.90	3.53267

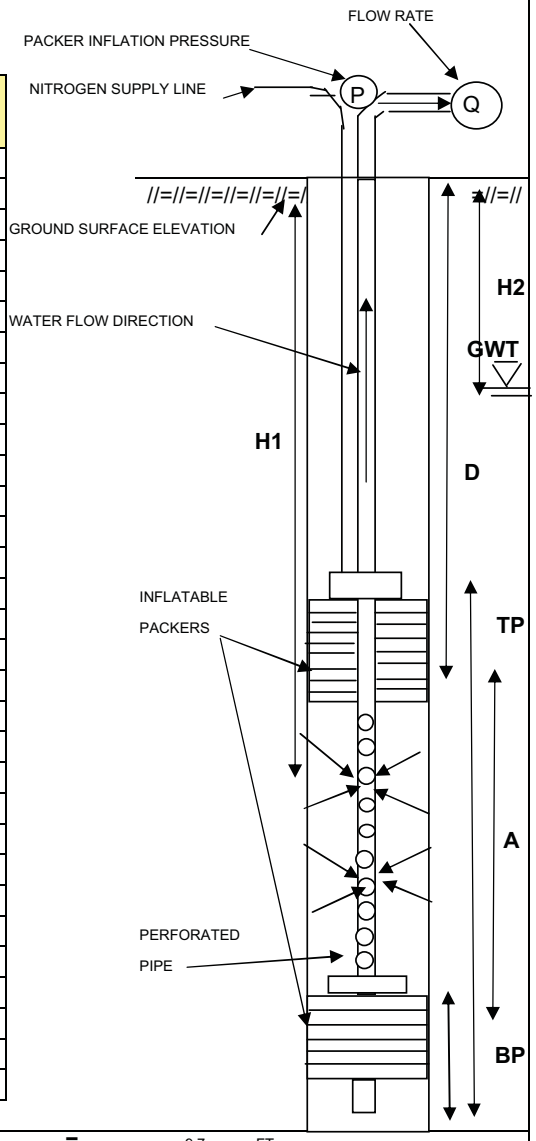

LEGEND:				
A - TOTAL LENGTH OF TEST SECTION (FT)	=	9.7	FT
TP - TOTAL LENGTH OF TOP PACKER AND ASSEMBLY	=	15.7	FT
BP - TOTAL LENGTH OF BOTTOM PACKER AND ASSEMBLY	=	4.65	FT
D - DISTANCE BETWEEN GROUND SURFACE AND TOP OF THE TEST ZONE	=	136.3	FT
PIP - PACKER INFLATION PRESSURE (D PSI **+ 50 PSI**)	=	180	PSI
H1- DISTANCE BETWEEN WATER PRESSURE GAUGE AND GROUND SURFACE	=	141.60	FT
H2- DISTANCE BETWEEN GROUND SURFACE AND GROUND WATER TABLE	=	9.25	FT

NOTE: A constant head test was also run at this interval.

GZA

BORING NO. /TEST NO. MW-54 T12

PACKER TEST LOG

GZA GEOENVIRONMENTAL OF NEW YORK 440 NINTH AVENUE, 18th FLOOR NEW YORK, NEW YORK 10001 SCIENTISTS AND ENGINEERS	Client Entergy Indian Point Energy Cente Buchanan, NY	BORING NO./TEST NO. MW-54 T12 SHEET 1 of 1 FILE NO. 41.0017869.01 PROJECT LOCATION Indian Point

CONTRACTOR	Aquifer Drilling & Testing, Inc.	BORING COORDINATES	N 462935.7461	E 604551.9223	
FOREMAN	Paul Gaddis	GROUND SURFACE EL.(FT)	14.99	DATUM	NGVD 29
GZA ENG.	Sara Covelli	FINAL BORING DEPTH (FT)	206	DATE START/END	9/29/06
DIAMETER OF DRILLED BOREHOLE	3.83 INCH	GROUND WATER DEPTH (STATIC WATER LEVEL DEPTH)	9.25 FT (from manhole)		0.75 FT manhole to casing
I.D. OF DRILLING RODS	2 INCH				

TESTED INTERVAL FROM / TO (FT)	TIME (HR:MIN:SEC)	ELAPSED TIME (Δt MIN)	DEPTH UNDER WATER (FT)	DEPTH TO WATER (FT)	DRAWDOWN (ΔH FT)	PUMPING RATE (gal/min)	SPECIFIC CAPACITY (Q/s)
136.3-146.0	1203	0	113.939	27.66	18.411	2.500	0.136
L= 9.7 ft	1204	1	113.925	27.68	18.425	2.300	0.125
	1205	2	114.184	27.42	18.166	2.300	0.127
	1206	3	113.867	27.73	18.483	2.400	0.130
	1207	4	113.536	28.06	18.814	2.400	0.128
	1208	5	113.306	28.29	19.044	2.400	0.126
	1209	6	113.147	28.45	19.203	2.400	0.125
	1210	7	113.140	28.46	19.21	2.400	0.125
	1211	8	113.032	28.57	19.318	2.400	0.124
	1212	9	112.931	28.67	19.419	2.400	0.124
	1213	10	112.802	28.80	19.548	2.400	0.123
	1214	11	112.701	28.90	19.649	2.400	0.122
	1215	12	112.672	28.93	19.678	2.400	0.122
	1216	13	112.672	28.93	19.678	2.400	0.122
	1217	14	112.586	29.01	19.764	2.400	0.121
	1218	15	112.514	29.09	19.836	2.400	0.121
	1219	16	112.500	29.10	19.85	2.400	0.121
	1220	17	112.456	29.14	19.894	2.400	0.121
	1221	18	112.370	29.23	19.98	2.400	0.120
	1222	19	112.312	29.29	20.038	2.400	0.120
	1223	20	112.284	29.32	20.066	2.400	0.120
	1224	21	112.284	29.32	20.066	2.350	0.117
	1225	22	112.240	29.36	20.11	2.350	0.117
	1226	23	112.226	29.37	20.124	2.350	0.117
	1227	24	112.269	29.33	20.081	2.350	0.117
	1228	25	112.255	29.35	20.095	2.350	0.117
	1229	26	112.255	29.35	20.095	2.350	0.117
	1230	27	112.240	29.36	20.11	2.350	0.117
	1232	29	112.255	29.35	20.095	2.350	0.117
	1234	31	112.212	29.39	20.138	2.350	0.117

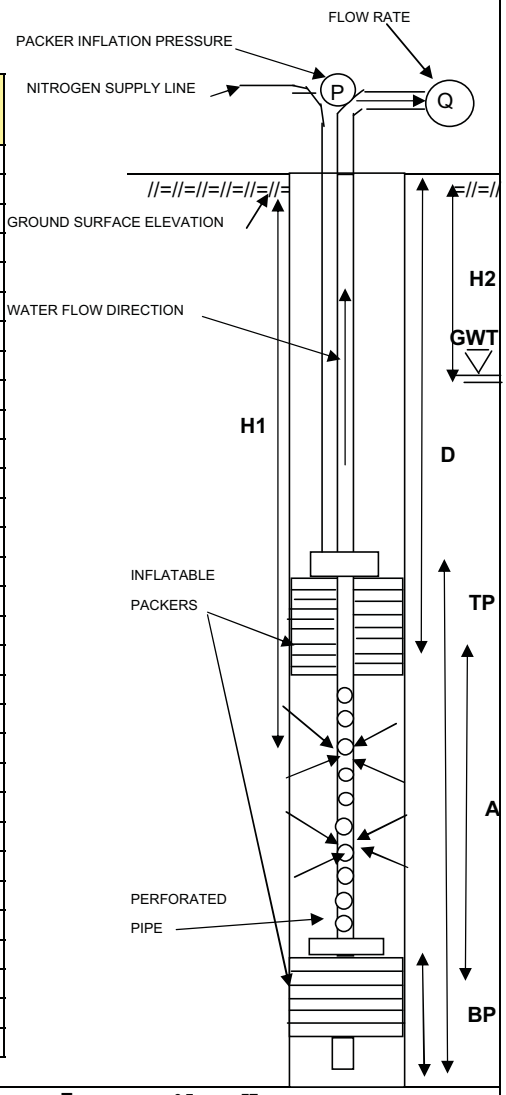

LEGEND:			
A - TOTAL LENGTH OF TEST SECTION (FT)	=	9.7	FT
TP - TOTAL LENGTH OF TOP PACKER AND ASSEMBLY	=	15.7	FT
BP - TOTAL LENGTH OF BOTTOM BACKER AND ASSEMBLY	=	4.65	FT
D - DISTANCE BETWEEN GROUND SURFACE AND TOP OF THE TEST ZONE	=	136.3	FT
PIP - PACKER INFLATION PRESSURE (D PSI **+ 50 PSI**)	=	180	PSI
H1- DISTANCE BETWEEN WATER PRESSURE GAUGE AND GROUND SURFACE	=	141.60	FT
H2- DISTANCE BETWEEN GROUND SURFACE AND GROUND WATER TABLE	=	9.25	FT

NOTE: A recovery test was also run at this interval.

GZA

BORING NO. /TEST NO. MW-54 T12

PACKER TEST LOG

GZA GEOENVIRONMENTAL OF NEW YORK 440 NINTH AVENUE, 18th FLOOR NEW YORK, NEW YORK 10001 SCIENTISTS AND ENGINEERS	Client Entergy Indian Point Energy Cente Buchanan, NY	BORING NO./TEST NO.	MW-54 T13
		SHEET	1 of 1
		FILE NO.	41.0017869.01
		PROJECT LOCATION	Indian Point

CONTRACTOR	Aquifer Drilling & Testing, Inc.	BORING COORDINATES	N 462935.7461	E 604551.9223	
FOREMAN	Paul Gaddis	GROUND SURFACE EL.(FT)	14.99	DATUM	NGVD 29
GZA ENG.	Sara Covelli	FINAL BORING DEPTH (FT)	206	DATE START/END	9/29/06
DIAMETER OF DRILLED BOREHOLE	3.83 INCH	GROUND WATER DEPTH (STATIC WATER LEVEL DEPTH)	9.14	(below grade)	0.75 FT ground to casing
I.D. OF DRILLING RODS	2 INCH				

TESTED INTERVAL FROM / TO (FT)	TIME (HR:MIN)	ELAPSED TIME (Δt MIN)	DEPTH UNDER WATER (FT)	DEPTH TO WATER (FT)	CUMULATIVE RECOVERY (ΔH FT)	RECOVERY RATE (ΔH/Δt)
146.0-155.7	13:58:00	0.0	124.536	26.89	0.00	-
L= 9.7 ft	13:58:30	0.5	128.280	23.15	3.74	7.48800
	13:59:00	1.0	132.572	18.86	8.04	8.03600
	13:59:30	1.5	135.655	15.78	11.12	7.41267
	14:00:00	2.0	137.830	13.60	13.29	6.64700
	14:00:30	2.5	139.285	12.15	14.75	5.89960
	14:01:00	3.0	140.250	11.18	15.71	5.23800
	14:01:30	3.5	140.884	10.55	16.35	4.67086
	14:02:00	4.0	141.302	10.13	16.77	4.19150
	14:02:30	4.5	141.576	9.85	17.04	3.78667
	14:03:00	5.0	141.749	9.68	17.21	3.44260
	14:03:30	5.5	141.864	9.57	17.33	3.15055
	14:04:00	6.0	141.951	9.48	17.42	2.90250
	14:05:00	7.0	142.066	9.36	17.53	2.50429
	14:06:00	8.0	142.123	9.31	17.59	2.19838
	14:07:00	9.0	142.152	9.28	17.62	1.95733
	14:08:00	10.0	142.210	9.22	17.67	1.76740
	14:09:00	11.0	142.224	9.21	17.69	1.60800

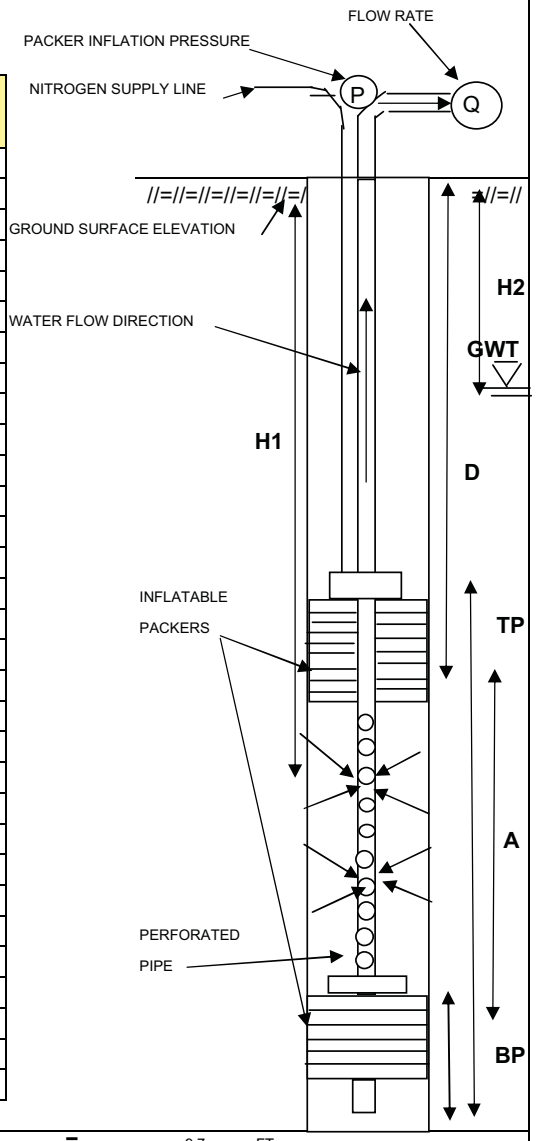

LEGEND:				
A - TOTAL LENGTH OF TEST SECTION (FT)	=	9.7	FT
TP - TOTAL LENGTH OF TOP PACKER AND ASSEMBLY	=	15.7	FT
BP - TOTAL LENGTH OF BOTTOM PACKER AND ASSEMBLY	=	4.65	FT
D - DISTANCE BETWEEN GROUND SURFACE AND TOP OF THE TEST ZONE	=	146	FT
PIP - PACKER INFLATION PRESSURE (D PSI **+ 50 PSI**)	=	185	PSI
H1- DISTANCE BETWEEN WATER PRESSURE GAUGE AND GROUND SURFACE	=	151.43	FT
H2- DISTANCE BETWEEN GROUND SURFACE AND GROUND WATER TABLE	=	9.14	FT

NOTE: A constant head test was also run at this interval.

GZA

BORING NO. /TEST NO. MW-54 T13

PACKER TEST LOG

GZA GEOENVIRONMENTAL OF NEW YORK 440 NINTH AVENUE, 18th FLOOR NEW YORK, NEW YORK 10001 SCIENTISTS AND ENGINEERS	Client Entergy Indian Point Energy Cente Buchanan, NY	BORING NO./TEST NO. MW-54 T13 SHEET 1 of 1 FILE NO. 41.0017869.01 PROJECT LOCATION Indian Point

CONTRACTOR	Aquifer Drilling & Testing, Inc.	BORING COORDINATES	N 462935.7461	E 604551.9223	
FOREMAN	Paul Gaddis	GROUND SURFACE EL.(FT)	14.99	DATUM	NGVD 29
GZA ENG.	Sara Covelli	FINAL BORING DEPTH (FT)	206	DATE START/END	9/29/06
DIAMETER OF DRILLED BOREHOLE	3.83 INCH	GROUND WATER DEPTH (STATIC WATER LEVEL DEPTH)	9.14 FT (from manhole)		0.75 FT manhole to casing
I.D. OF DRILLING RODS	2 INCH				

TESTED INTERVAL FROM / TO (FT)	TIME (HR:MIN:SEC)	ELAPSED TIME (Δt MIN)	DEPTH UNDER WATER (FT)	DEPTH TO WATER (FT)	DRAWDOWN (ΔH FT)	PUMPING RATE (gal/min)	SPECIFIC CAPACITY (Q/s)
146.0-155.7	1412	0	124.997	26.43	17.293	2.500	0.145
L= 9.7 ft	1413	1	123.110	28.32	19.18	2.500	0.130
	1414	2	122.549	28.88	19.741	2.100	0.106
	1415	3	122.448	28.98	19.842	2.100	0.106
	1416	4	122.275	29.16	20.015	2.100	0.105
	1417	5	122.362	29.07	19.928	2.100	0.105
	1418	6	122.347	29.08	19.943	2.100	0.105
	1419	7	122.275	29.16	20.015	2.100	0.105
	1420	8	122.232	29.20	20.058	2.100	0.105
	1421	9	122.218	29.21	20.072	2.100	0.105
	1422	10	122.232	29.20	20.058	2.100	0.105
	1423	11	122.218	29.21	20.072	2.100	0.105

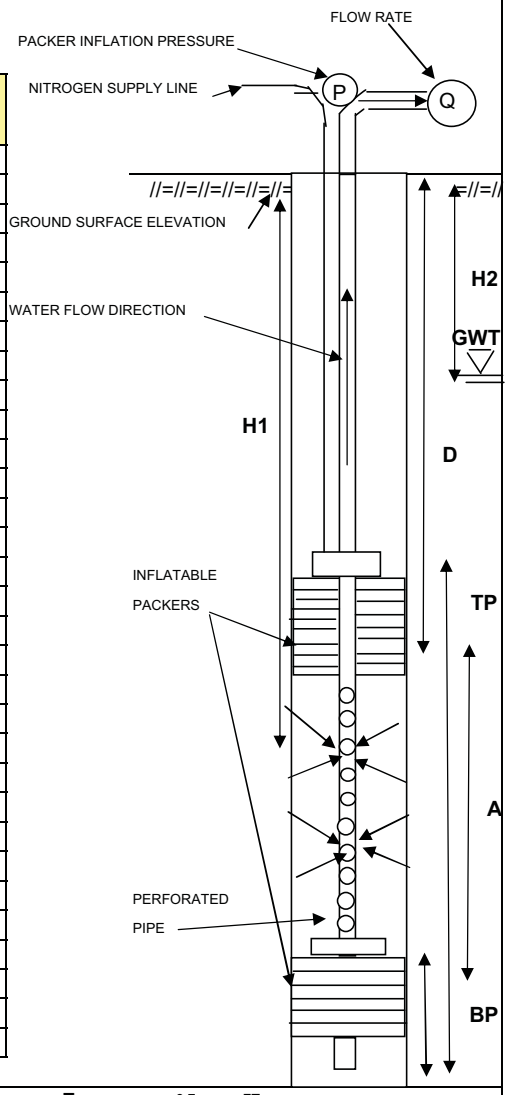

LEGEND:			
A - TOTAL LENGTH OF TEST SECTION (FT)	=	9.7	FT
TP - TOTAL LENGTH OF TOP PACKER AND ASSEMBLY	=	15.7	FT
BP - TOTAL LENGTH OF BOTTOM BACKER AND ASSEMBLY	=	4.65	FT
D - DISTANCE BETWEEN GROUND SURFACE AND TOP OF THE TEST ZONE	=	146	FT
PIP - PACKER INFLATION PRESSURE (D PSI + **50 PSI**)	=	185	PSI
H1- DISTANCE BETWEEN WATER PRESSURE GAUGE AND GROUND SURFACE	=	151.43	FT
H2- DISTANCE BETWEEN GROUND SURFACE AND GROUND WATER TABLE	=	9.14	FT

NOTE: A recovery test was also run at this interval.

GZA

BORING NO. /TEST NO. MW-54 T13

PACKER TEST LOG

GZA GEOENVIRONMENTAL OF NEW YORK 440 NINTH AVENUE, 18th FLOOR NEW YORK, NEW YORK 10001 SCIENTISTS AND ENGINEERS	Client Entergy Indian Point Energy Cente Buchanan, NY	BORING NO./TEST NO.	MW-54 T14
		SHEET	1 of 1
		FILE NO.	41.0017869.01
		PROJECT LOCATION	Indian Point

CONTRACTOR	Aquifer Drilling & Testing, Inc.	BORING COORDINATES	N 462935.7461	E 604551.9223	
FOREMAN	Paul Gaddis	GROUND SURFACE EL.(FT)	14.99	DATUM	NGVD 29
GZA ENG.	Sara Covelli	FINAL BORING DEPTH (FT)	206	DATE START/END	10/2/06
DIAMETER OF DRILLED BOREHOLE	3.83 INCH	GROUND WATER DEPTH (STATIC WATER LEVEL DEPTH)	9.04 (below grade)	0.75 FT ground to casing	
I.D. OF DRILLING RODS	2 INCH				

TESTED INTERVAL FROM / TO (FT)	TIME (HR:MIN)	ELAPSED TIME (Δt MIN)	DEPTH UNDER WATER (FT)	DEPTH TO WATER (FT)	CUMULATIVE RECOVERY (ΔH FT)	RECOVERY RATE (ΔH/Δt)
157.4-167.1	8:24:00	0.0	135.871	26.87	0.00	-
L= 9.7 ft	8:24:30	0.5	138.608	24.13	2.74	5.47400
	8:25:00	1.0	141.000	21.74	5.13	5.12900
	8:25:30	1.5	143.089	19.65	7.22	4.81200
	8:26:00	2.0	144.876	17.86	9.01	4.50250
	8:26:30	2.5	146.389	16.35	10.52	4.20720
	8:27:00	3.0	147.700	15.04	11.83	3.94300
	8:27:30	3.5	148.781	13.96	12.91	3.68857
	8:28:00	4.0	149.689	13.05	13.82	3.45450
	8:28:30	4.5	150.654	12.09	14.78	3.28511
	8:29:00	5.0	151.043	11.70	15.17	3.03440
	8:29:30	5.5	151.548	11.19	15.68	2.85036
	8:30:00	6.0	151.937	10.80	16.07	2.67767
	8:30:30	7.0	152.297	10.44	16.43	2.34657
	8:31:00	8.0	152.542	10.20	16.67	2.08388
	8:31:30	9.0	152.759	9.98	16.89	1.87644
	8:32:00	10.0	152.917	9.82	17.05	1.70460
	8:32:30	11.0	153.061	9.68	17.19	1.56273
	8:33:00	11.5	153.162	9.58	17.29	1.50357
	8:33:30	12.0	153.277	9.46	17.41	1.45050

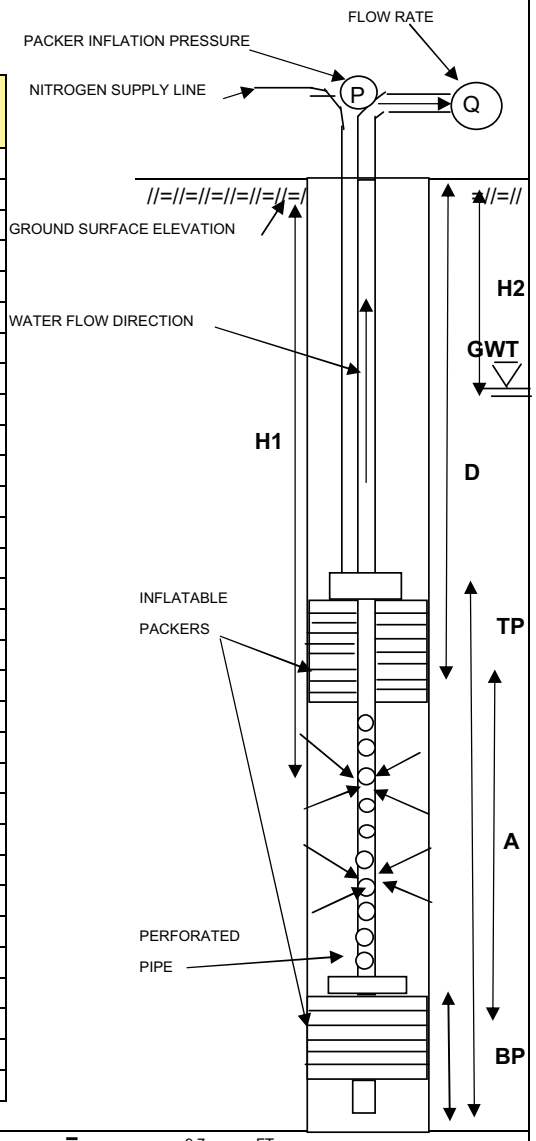

LEGEND:				
A - TOTAL LENGTH OF TEST SECTION (FT)	=	9.7	FT
TP - TOTAL LENGTH OF TOP PACKER AND ASSEMBLY	=	15.7	FT
BP - TOTAL LENGTH OF BOTTOM PACKER AND ASSEMBLY	=	4.65	FT
D - DISTANCE BETWEEN GROUND SURFACE AND TOP OF THE TEST ZONE	=	157.4	FT
PIP - PACKER INFLATION PRESSURE (D PSI **+ 50 PSI**)	=	190	PSI
H1- DISTANCE BETWEEN WATER PRESSURE GAUGE AND GROUND SURFACE	=	162.74	FT
H2- DISTANCE BETWEEN GROUND SURFACE AND GROUND WATER TABLE	=	9.14	FT

GZA

BORING NO. /TEST NO. MW-54 T14

PACKER TEST LOG

GZA GEOENVIRONMENTAL OF NEW YORK 440 NINTH AVENUE, 18th FLOOR NEW YORK, NEW YORK 10001 SCIENTISTS AND ENGINEERS	Client Entergy Indian Point Energy Cente Buchanan, NY	BORING NO./TEST NO.	MW-54 T15
		SHEET	1 of 1
		FILE NO.	41.0017869.01
		PROJECT LOCATION	Indian Point

CONTRACTOR	Aquifer Drilling & Testing, Inc.	BORING COORDINATES	N 462935.7461	E 604551.9223	
FOREMAN	Paul Gaddis	GROUND SURFACE EL.(FT)	14.99	DATUM	NGVD 29
GZA ENG.	Sara Covelli	FINAL BORING DEPTH (FT)	206	DATE START/END	10/2/06
DIAMETER OF DRILLED BOREHOLE	3.83 INCH	GROUND WATER DEPTH (STATIC WATER LEVEL DEPTH)	9.17	(below grade)	0.75 FT ground to casing
I.D. OF DRILLING RODS	2 INCH				

TESTED INTERVAL FROM / TO (FT)	TIME (HR:MIN)	ELAPSED TIME (Δt MIN)	DEPTH UNDER WATER (FT)	DEPTH TO WATER (FT)	CUMULATIVE RECOVERY (ΔH FT)	RECOVERY RATE (ΔH/Δt)
172.3-182.0	10:20:00	0.0	154.099	23.50	0.00	-
L= 9.7 ft	10:20:30	0.5	154.142	23.46	0.04	0.08600
	10:21:00	1.0	157.933	19.67	3.83	3.83400
	10:21:30	1.5	161.725	15.88	7.63	5.08400
	10:22:00	2.0	164.046	13.55	9.95	4.97350
	10:22:30	2.5	165.445	12.16	11.35	4.53840
	10:23:00	3.0	166.310	11.29	12.21	4.07033
	10:23:30	3.5	166.829	10.77	12.73	3.63714
	10:24:00	4.0	167.175	10.43	13.08	3.26900
	10:24:30	4.5	167.406	10.19	13.31	2.95711
	10:25:00	5.0	167.579	10.02	13.48	2.69600
	10:25:30	5.5	167.694	9.91	13.60	2.47182
	10:26:00	6.0	167.780	9.82	13.68	2.28017
	10:26:30	6.5	167.838	9.76	13.74	2.11369
	10:27:00	7.0	167.896	9.70	13.80	1.97100

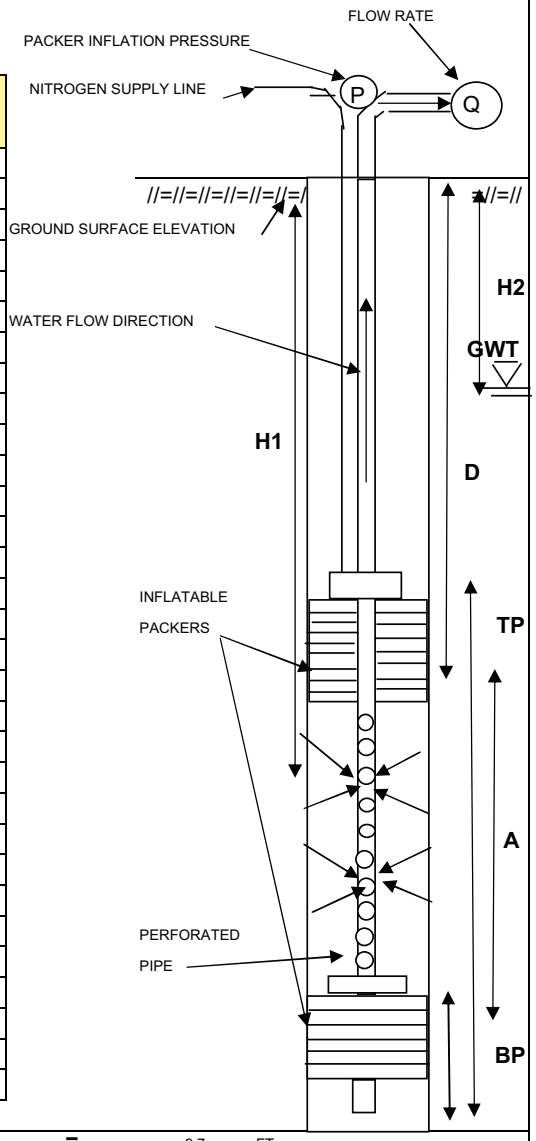

LEGEND:				
A - TOTAL LENGTH OF TEST SECTION (FT)	=	9.7	FT
TP - TOTAL LENGTH OF TOP PACKER AND ASSEMBLY	=	15.7	FT
BP - TOTAL LENGTH OF BOTTOM PACKER AND ASSEMBLY	=	4.65	FT
D - DISTANCE BETWEEN GROUND SURFACE AND TOP OF THE TEST ZONE	=	172.3	FT
PIP - PACKER INFLATION PRESSURE (D PSI **+ 50 PSI**)	=	180	PSI
H1- DISTANCE BETWEEN WATER PRESSURE GAUGE AND GROUND SURFACE	=	177.6	FT
H2- DISTANCE BETWEEN GROUND SURFACE AND GROUND WATER TABLE	=	9.17	FT

NOTE: A constant head test was also run at this interval.

GZA

BORING NO. /TEST NO. MW-54 T15

PACKER TEST LOG

GZA GEOENVIRONMENTAL OF NEW YORK 440 NINTH AVENUE, 18th FLOOR NEW YORK, NEW YORK 10001 SCIENTISTS AND ENGINEERS	Client Entergy Indian Point Energy Cente Buchanan, NY	BORING NO./TEST NO. MW-54 T15 SHEET 1 of 1 FILE NO. 41.0017869.01 PROJECT LOCATION Indian Point

CONTRACTOR	Aquifer Drilling & Testing, Inc.	BORING COORDINATES	N 462935.7461	E 604551.9223	
FOREMAN	Paul Gaddis	GROUND SURFACE EL.(FT)	14.99	DATUM	NGVD 29
GZA ENG.	Sara Covelli	FINAL BORING DEPTH (FT)	206	DATE START/END	10/2/06
DIAMETER OF DRILLED BOREHOLE	3.83 INCH	GROUND WATER DEPTH (STATIC WATER LEVEL DEPTH)	9.17 FT (from manhole)		0.75 FT manhole to casing
I.D. OF DRILLING RODS	2 INCH				

TESTED INTERVAL FROM / TO (FT)	TIME (HR:MIN:SEC)	ELAPSED TIME (Δt MIN)	DEPTH UNDER WATER (FT)	DEPTH TO WATER (FT)	DRAWDOWN (ΔH FT)	PUMPING RATE (gal/min)	SPECIFIC CAPACITY (Q/s)
172.3-182.0	1052	0	156.362	21.24	12.068	2.500	0.207
L= 9.7 ft	1053	1	154.474	23.13	13.956	2.500	0.179
	1054	2	154.041	23.56	14.389	2.250	0.156
	1055	3	153.825	23.78	14.605	2.250	0.154
	1056	4	153.681	23.92	14.749	2.250	0.153
	1057	5	153.566	24.03	14.864	2.250	0.151
	1058	6	153.681	23.92	14.749	2.250	0.153
	1059	7	153.695	23.91	14.735	2.250	0.153
	1100	8	153.595	24.01	14.835	2.250	0.152
	1101	9	153.522	24.08	14.908	2.250	0.151
	1102	10	153.479	24.12	14.951	2.250	0.150
	1103	11	153.465	24.14	14.965	2.250	0.150
	1104	12	153.436	24.16	14.994	2.250	0.150
	1105	13	153.436	24.16	14.994	2.250	0.150
	1106	14	153.407	24.19	15.023	2.250	0.150
	1107	15	153.407	24.19	15.023	2.250	0.150
	1108	16	153.349	24.25	15.081	2.250	0.149
	1109	17	153.335	24.27	15.095	2.250	0.149
	1110	18	153.335	24.27	15.095	2.250	0.149
	1111	19	153.349	24.25	15.081	2.250	0.149
	1112	20	153.349	24.25	15.081	2.250	0.149
	1113	21	153.321	24.28	15.109	2.250	0.149
	1114	22	153.292	24.31	15.138	2.250	0.149
	1115	23	153.234	24.37	15.196	2.250	0.148
	1116	24	153.220	24.38	15.21	2.250	0.148
	1117	25	153.220	24.38	15.21	2.250	0.148
	1118	26	153.234	24.37	15.196	2.250	0.148
	1119	27	153.220	24.38	15.21	2.250	0.148
	1120	28	153.220	24.38	15.21	2.250	0.148

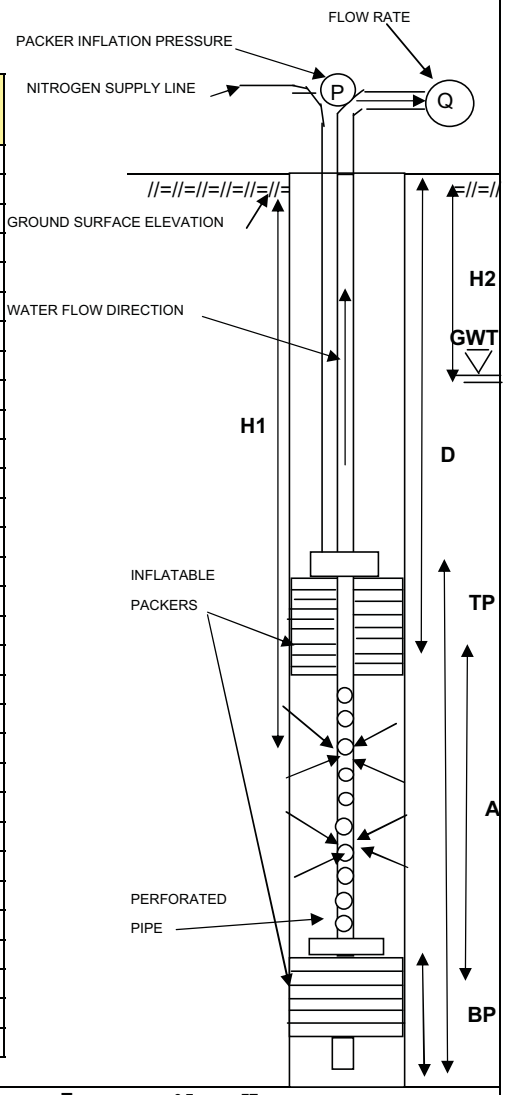

LEGEND:				
A - TO	0	=	9.7	FT
TP - TOTAL LENGTH OF TOP PACKER AND ASSEMBLY		=	15.7	FT
BP - TOTAL LENGTH OF BOTTOM BACKER AND ASSEMBLY		=	4.65	FT
D - DISTANCE BETWEEN GROUND SURFACE AND TOP OF THE TEST ZONE		=	172.3	FT
PIP - PACKER INFLATION PRESSURE (D PSI + **50 PSI**)		=	180	PSI
H1- DISTANCE BETWEEN WATER PRESSURE GAUGE AND GROUND SURFACE		=	177.6	FT
H2- DISTANCE BETWEEN GROUND SURFACE AND GROUND WATER TABLE		=	9.17	FT

NOTE: A recovery test was also run at this interval.

GZA

BORING NO. /TEST NO. MW-54 T15

PACKER TEST LOG

GZA GEOENVIRONMENTAL OF NEW YORK 440 NINTH AVENUE, 18th FLOOR NEW YORK, NEW YORK 10001 SCIENTISTS AND ENGINEERS	Client Entergy Indian Point Energy Cente Buchanan, NY	BORING NO./TEST NO.	MW-54 T16
		SHEET	1 of 1
		FILE NO.	41.0017869.01
		PROJECT LOCATION	Indian Point

CONTRACTOR	Aquifer Drilling & Testing, Inc.	BORING COORDINATES	N 462935.7461	E 604551.9223	
FOREMAN	Paul Gaddis	GROUND SURFACE EL.(FT)	14.99	DATUM	NGVD 29
GZA ENG.	Sara Covelli	FINAL BORING DEPTH (FT)	206	DATE START/END	10/2/06
DIAMETER OF DRILLED BOREHOLE	3.83 INCH	GROUND WATER DEPTH (STATIC WATER LEVEL DEPTH)	9.55 (below grade)	0.75 FT ground to casing	
I.D. OF DRILLING RODS	2 INCH				

TESTED INTERVAL FROM / TO (FT)	TIME (HR:MIN)	ELAPSED TIME (Δt MIN)	DEPTH UNDER WATER (FT)	DEPTH TO WATER (FT)	CUMULATIVE RECOVERY (ΔH FT)	RECOVERY RATE (ΔH/Δt)
182.0-bottom	12:24:30	0.0	161.754	25.60	0.00	-
L= 24 ft	12:25:00	0.5	163.772	23.58	2.02	4.03600
	12:25:30	1.0	168.473	18.88	6.72	6.71900
	12:26:00	1.5	171.602	15.75	9.85	6.56533
	12:26:30	2.0	173.650	13.70	11.90	5.94800
	12:27:00	2.5	174.948	12.40	13.19	5.27760
	12:27:30	3.0	175.756	11.59	14.00	4.66733
	12:28:00	3.5	176.275	11.08	14.52	4.14886
	12:28:30	4.0	176.607	10.74	14.85	3.71325
	12:29:00	4.5	176.852	10.50	15.10	3.35511
	12:29:30	5.0	176.996	10.35	15.24	3.04840
	12:30:30	6.0	177.212	10.14	15.46	2.57633
	12:31:30	7.0	177.328	10.02	15.57	2.22486
	12:32:30	8.0	177.414	9.94	15.66	1.95750
	12:37:30	13.0	177.573	9.78	15.82	1.21685
	12:42:30	18.0	177.660	9.69	15.91	0.88367

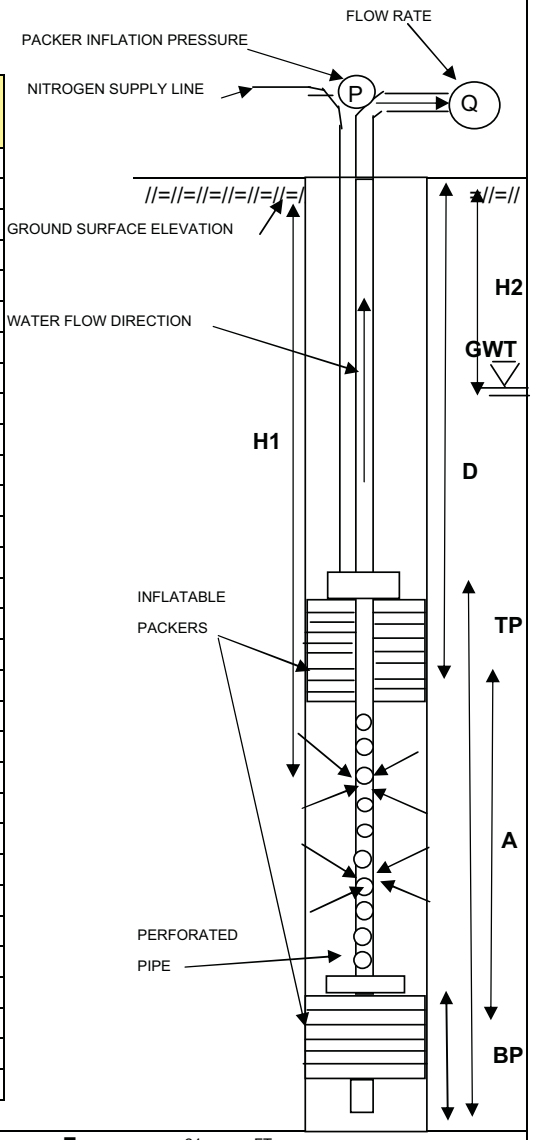

LEGEND:				
	A - TOTAL LENGTH OF TEST SECTION (FT)	=	24	FT
	TP - TOTAL LENGTH OF TOP PACKER AND ASSEMBLY	=	15.7	FT
	BP - TOTAL LENGTH OF BOTTOM PACKER AND ASSEMBLY	=	4.65	FT
	D - DISTANCE BETWEEN GROUND SURFACE AND TOP OF THE TEST ZONE	=	182	FT
	PIP - PACKER INFLATION PRESSURE (D PSI **+ 50 PSI**)	=	180	PSI
	H1- DISTANCE BETWEEN WATER PRESSURE GAUGE AND GROUND SURFACE	=	187.35	FT
	H2- DISTANCE BETWEEN GROUND SURFACE AND GROUND WATER TABLE	=	9.55	FT

NOTE: Only the top packer was inflated for this test. The interval tested here may be considered from 182.0 ft b/g to the bottom of the well (206 ft b/g).
A constant head test was also run at this interval.

GZA

BORING NO. /TEST NO. MW-54 T16

PACKER TEST LOG

GZA GEOENVIRONMENTAL OF NEW YORK 440 NINTH AVENUE, 18th FLOOR NEW YORK, NEW YORK 10001 SCIENTISTS AND ENGINEERS	Client Entergy Indian Point Energy Cente Buchanan, NY	BORING NO./TEST NO. MW-54 T16 SHEET 1 of 1 FILE NO. 41.0017869.01 PROJECT LOCATION Indian Point

CONTRACTOR	Aquifer Drilling & Testing, Inc.	BORING COORDINATES	N 462935.7461	E 604551.9223	
FOREMAN	Paul Gaddis	GROUND SURFACE EL.(FT)	14.99	DATUM	NGVD 29
GZA ENG.	Sara Covelli	FINAL BORING DEPTH (FT)	206	DATE START/END	10/2/06
DIAMETER OF DRILLED BOREHOLE	3.83 INCH	GROUND WATER DEPTH (STATIC WATER LEVEL DEPTH)	9.55 FT (from manhole)		0.75 FT manhole to casing
I.D. OF DRILLING RODS	2 INCH				

TESTED INTERVAL FROM / TO (FT)	TIME (HR:MIN:SEC)	ELAPSED TIME (Δt MIN)	DEPTH UNDER WATER (FT)	DEPTH TO WATER (FT)	DRAWDOWN (ΔH FT)	PUMPING RATE (gal/min)	SPECIFIC CAPACITY (Q/s)
182.0-bottom	1206	0	162.431	24.92	15.369	2.250	0.146
L= 24.0 ft	1207	1	162.345	25.01	15.455	2.250	0.146
	1208	2	162.301	25.05	15.499	2.250	0.145
	1209	3	162.229	25.12	15.571	2.250	0.144
	1210	4	162.128	25.22	15.672	2.250	0.144
	1211	5	162.056	25.29	15.744	2.250	0.143
	1212	6	162.027	25.32	15.773	2.250	0.143
	1213	7	161.970	25.38	15.83	2.250	0.142
	1214	8	161.883	25.47	15.917	2.200	0.138
	1215	9	161.840	25.51	15.96	2.200	0.138
	1216	10	161.840	25.51	15.96	2.200	0.138
	1217	11	161.826	25.52	15.974	2.200	0.138
	1218	12	161.826	25.52	15.974	2.200	0.138
	1219	13	161.811	25.54	15.989	2.200	0.138
	1220	14	161.782	25.57	16.018	2.200	0.137
	1221	15	161.797	25.55	16.003	2.200	0.137
	1222	16	161.782	25.57	16.018	2.200	0.137
	1223	17	161.768	25.58	16.032	2.200	0.137
	1224	18	161.754	25.60	16.046	2.200	0.137

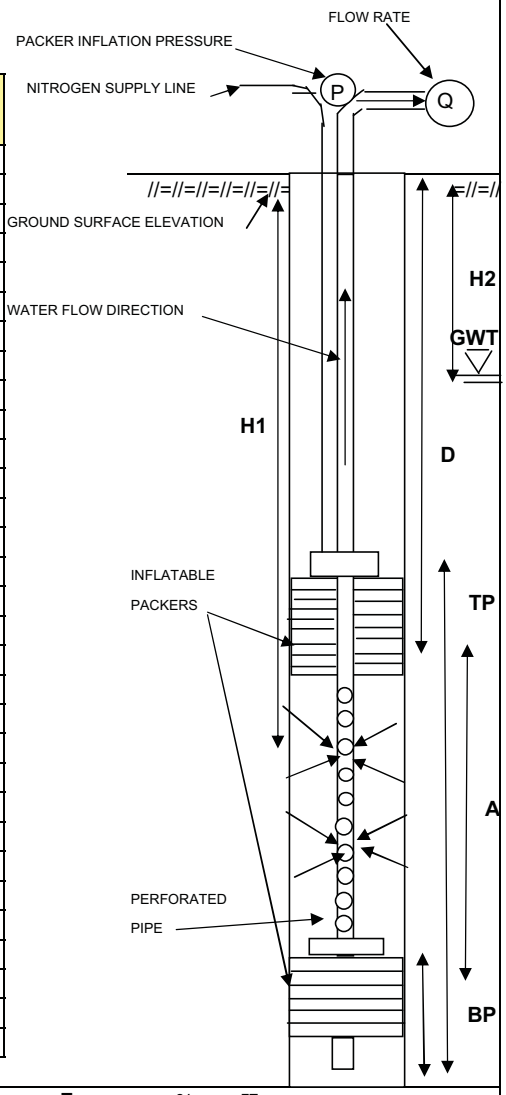

LEGEND:			
A - TOTAL LENGTH OF TEST SECTION (FT)	=	24	FT
TP - TOTAL LENGTH OF TOP PACKER AND ASSEMBLY	=	15.7	FT
BP - TOTAL LENGTH OF BOTTOM BACKER AND ASSEMBLY	=	4.65	FT
D - DISTANCE BETWEEN GROUND SURFACE AND TOP OF THE TEST ZONE	=	182	FT
PIP - PACKER INFLATION PRESSURE (D PSI + **50 PSI**)	=	180	PSI
H1- DISTANCE BETWEEN WATER PRESSURE GAUGE AND GROUND SURFACE	=	187.35	FT
H2- DISTANCE BETWEEN GROUND SURFACE AND GROUND WATER TABLE	=	9.55	FT

NOTE: A recovery test was also run at this interval.

GZA

BORING NO. /TEST NO. MW-54 T16

PACKER TEST LOG

GZA GEOENVIRONMENTAL OF NEW YORK 440 NINTH AVENUE, 18th FLOOR NEW YORK, NEW YORK 10001 SCIENTISTS AND ENGINEERS	Client Entergy Indian Point Energy Cente Buchanan, NY	BORING NO./TEST NO.	MW-54 T17
		SHEET	1 of 1
		FILE NO.	41.0017869.01
		PROJECT LOCATION	Indian Point

CONTRACTOR	Aquifer Drilling & Testing, Inc.	BORING COORDINATES	N 462935.7461	E 604551.9223	
FOREMAN	Paul Gaddis	GROUND SURFACE EL.(FT)	14.99	DATUM	NGVD 29
GZA ENG.	Sara Covelli	FINAL BORING DEPTH (FT)	206	DATE START/END	10/2/06
DIAMETER OF DRILLED BOREHOLE	3.83 INCH	GROUND WATER DEPTH (STATIC WATER LEVEL DEPTH)	9.22	(below grade)	0.75 FT ground to casing
I.D. OF DRILLING RODS	2 INCH				

TESTED INTERVAL FROM / TO (FT)	TIME (HR:MIN)	ELAPSED TIME (Δt MIN)	DEPTH UNDER WATER (FT)	DEPTH TO WATER (FT)	CUMULATIVE RECOVERY (ΔH FT)	RECOVERY RATE (ΔH/Δt)
187.0-bottom	13:55:30	0.0	167.074	26.13	0.00	-
L= 24 ft	13:56:00 PM	0.5	171.645	21.56	4.57	9.14200
	13:56:30 PM	1.0	175.943	17.26	8.87	8.86900
	13:57:00 PM	1.5	178.713	14.49	11.64	7.75933
	13:57:30 PM	2.0	180.429	12.77	13.36	6.67750
	13:58:00 PM	2.5	181.554	11.65	14.48	5.79200
	13:58:30 PM	3.0	182.247	10.95	15.17	5.05767
	13:59:00 PM	3.5	182.694	10.51	15.62	4.46286
	13:59:30 PM	4.0	182.983	10.22	15.91	3.97725
	14:00:00	4.5	183.170	10.03	16.10	3.57689
	14:00:30	5.0	183.314	9.89	16.24	3.24800
	14:01:30	6.0	183.502	9.70	16.43	2.73800
	14:02:30	7.0	183.589	9.61	16.52	2.35929
	14:03:30	8.0	183.675	9.52	16.60	2.07513
	14:08:30	13.0	183.819	9.38	16.75	1.28808

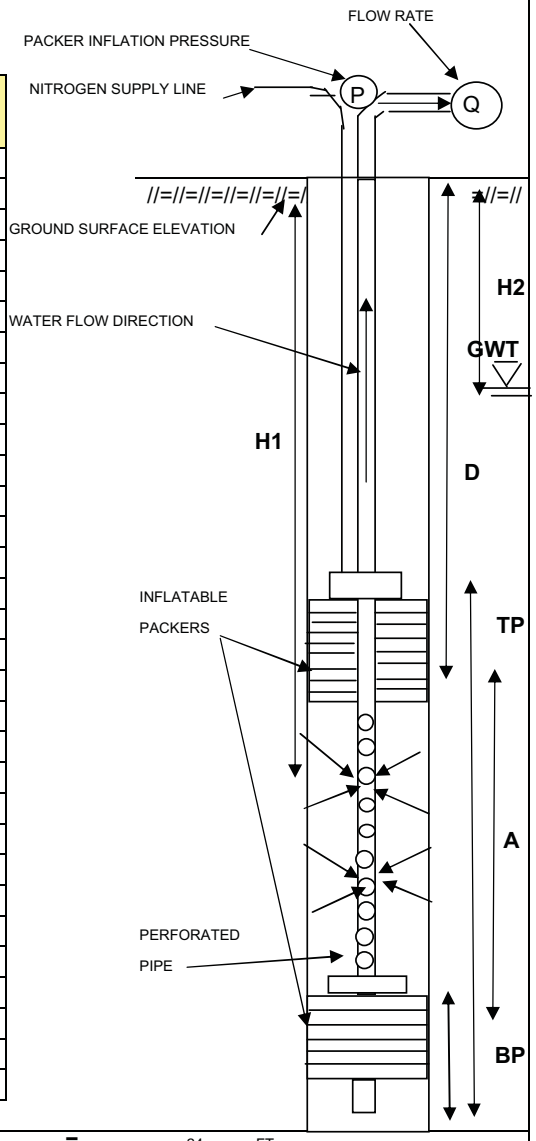

LEGEND:				
A - TOTAL LENGTH OF TEST SECTION (FT)	=	24	FT
TP - TOTAL LENGTH OF TOP PACKER AND ASSEMBLY	=	15.7	FT
BP - TOTAL LENGTH OF BOTTOM PACKER AND ASSEMBLY	=	4.65	FT
D - DISTANCE BETWEEN GROUND SURFACE AND TOP OF THE TEST ZONE	=	187	FT
PIP - PACKER INFLATION PRESSURE (D PSI **+ 50 PSI**)	=	180	PSI
H1- DISTANCE BETWEEN WATER PRESSURE GAUGE AND GROUND SURFACE	=	193.20	FT
H2- DISTANCE BETWEEN GROUND SURFACE AND GROUND WATER TABLE	=	9.22	FT

NOTE: Only the top packer was inflated for this test. The interval tested here may be considered from 187.0 ft b/g to the bottom of the well (206 ft b/g).

PACKER TEST LOG

GZA GEOENVIRONMENTAL OF NEW YORK 440 NINTH AVENUE, 18th FLOOR NEW YORK, NEW YORK 10001 SCIENTISTS AND ENGINEERS	Client Entergy Indian Point Energy Cente Buchanan, NY	BORING NO./TEST NO.	MW-60 T1
		SHEET	1 of 1
		FILE NO.	41.0017869.01
		PROJECT LOCATION	Indian Point

CONTRACTOR	Aquifer Drilling & Testing, Inc.	BORING COORDINATES	N 463382.5093	E	604586.4889
FOREMAN	Dave Carter	GROUND SURFACE EL.(FT)	14.31	DATUM	NGVD 29
GZA ENG.	Sara Covelli	FINAL BORING DEPTH (FT)	202	DATE START/END	12/7/06
DIAMETER OF DRILLED BOREHOLE	3.83 INCH	GROUND WATER DEPTH (STATIC WATER LEVEL DEPTH)	11.35 (below grade)		1.83 FT ground to casing
I.D. OF DRILLING RODS	2 INCH				

TESTED INTERVAL FROM / TO (FT)	TIME (HR:MIN)	ELAPSED TIME (Δt MIN)	DEPTH UNDER WATER (FT)	DEPTH TO WATER (FT)	CUMULATIVE RECOVERY (ΔH FT)	RECOVERY RATE (ΔH/Δt)
188.2-202.0'	12:33:00	0.0	158.351	35.35	0.00	-
L= 13.8 ft	12:34:00	1.0	159.014	34.69	0.66	0.66300
	12:35:00	2.0	159.620	34.08	1.27	0.63450
	12:36:00	3.0	160.182	33.52	1.83	0.61033
	12:37:00	4.0	160.701	33.00	2.35	0.58750
	12:38:00	5.0	161.177	32.52	2.83	0.56520
	12:39:00	6.0	161.537	32.16	3.19	0.53100
	12:40:00	7.0	161.883	31.82	3.53	0.50457
	12:41:00	8.0	161.999	31.70	3.65	0.45600
	12:42:00	9.0	162.157	31.54	3.81	0.42289
	12:43:00	10.0	162.273	31.43	3.92	0.39220
	12:44:00	11.0	162.373	31.33	4.02	0.36564
	12:45:00	12.0	162.446	31.25	4.10	0.34125
	12:46:00	13.0	162.503	31.20	4.15	0.31938
	12:47:00	14.0	162.546	31.15	4.19	0.29964
	12:48:00	15.0	162.590	31.11	4.24	0.28260
	12:53:00	20.0	162.748	30.95	4.40	0.21985
	12:58:00	25.0	162.921	30.78	4.57	0.18280
	13:03:00	30.0	163.094	30.61	4.74	0.15810
	13:08:00	35.0	163.267	30.43	4.92	0.14046
	13:13:00	40.0	163.412	30.29	5.06	0.12653
	13:18:00	45.0	163.570	30.13	5.22	0.11598
	13:23:00	50.0	163.700	30.00	5.35	0.10698
	13:28:00	55.0	163.844	29.86	5.49	0.09987
	13:33:00	60.0	164.003	29.70	5.65	0.09420
	13:38:00	65.0	164.262	29.44	5.91	0.09094

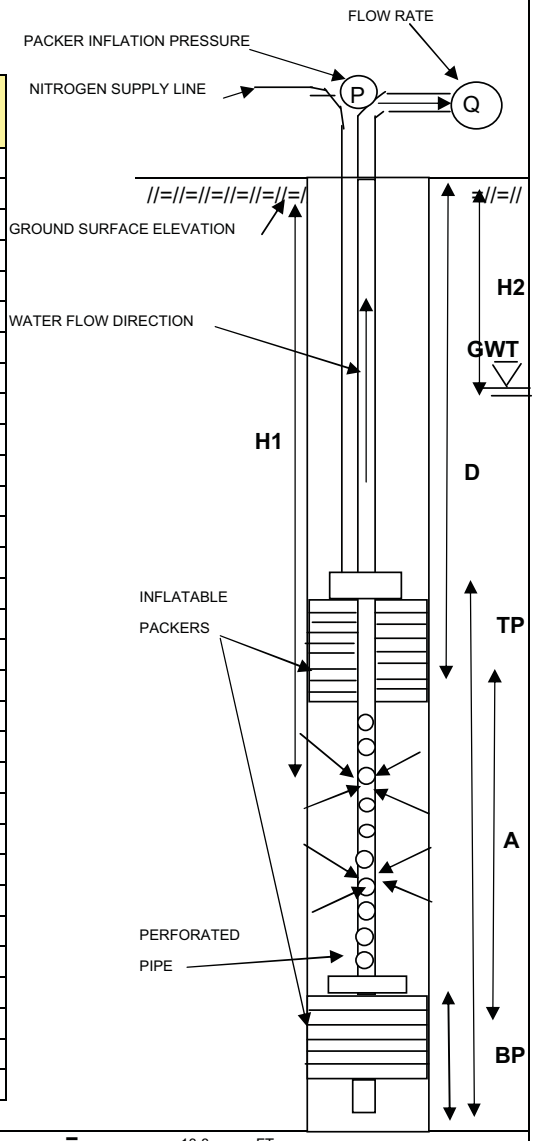

LEGEND:				
A - TOTAL LENGTH OF TEST SECTION (FT)	=	13.8	FT
TP - TOTAL LENGTH OF TOP PACKER AND ASSEMBLY	=	15.7	FT
BP - TOTAL LENGTH OF BOTTOM PACKER AND ASSEMBLY	=	4.65	FT
D - DISTANCE BETWEEN GROUND SURFACE AND TOP OF THE TEST ZONE	=	188.2	FT
PIP - PACKER INFLATION PRESSURE (D PSI **+ 50 PSI**)	=	180	PSI
H1- DISTANCE BETWEEN WATER PRESSURE GAUGE AND GROUND SURFACE	=	193.7	FT
H2- DISTANCE BETWEEN GROUND SURFACE AND GROUND WATER TABLE	=	11.35	FT

NOTE: Only the top packer was inflated for this test. The interval tested here may be considered from 188.2' b/g to bottom of well.

GZA

BORING NO. /TEST NO. MW-60 T1

PACKER TEST LOG

GZA GEOENVIRONMENTAL OF NEW YORK 440 NINTH AVENUE, 18th FLOOR NEW YORK, NEW YORK 10001 SCIENTISTS AND ENGINEERS	Client Entergy Indian Point Energy Cente Buchanan, NY	BORING NO./TEST NO.	MW-60 T2
		SHEET	1 of 1
		FILE NO.	41.0017869.01
		PROJECT LOCATION	Indian Point

CONTRACTOR	Aquifer Drilling & Testing, Inc.	BORING COORDINATES	N 463382.5093	E	604586.4889
FOREMAN	Dave Carter	GROUND SURFACE EL.(FT)	14.31	DATUM	NGVD 29
GZA ENG.	Sara Covelli	FINAL BORING DEPTH (FT)	202	DATE START/END	12/7/06
DIAMETER OF DRILLED BOREHOLE	3.83 INCH	GROUND WATER DEPTH (STATIC WATER LEVEL DEPTH)	11.95 (below grade)		1.83 FT ground to casing
I.D. OF DRILLING RODS	2 INCH				

TESTED INTERVAL FROM / TO (FT)	TIME (HR:MIN)	ELAPSED TIME (Δt MIN)	DEPTH UNDER WATER (FT)	DEPTH TO WATER (FT)	CUMULATIVE RECOVERY (ΔH FT)	RECOVERY RATE (ΔH/Δt)
172.3-182.0	14:40:00	0.0	144.054	33.55	0.00	-
L= 9.7 ft	14:41:00	1.0	144.328	33.27	0.27	0.27400
	14:42:00	2.0	144.530	33.07	0.48	0.23800
	14:43:00	3.0	144.731	32.87	0.68	0.22567
	14:44:00	4.0	144.904	32.70	0.85	0.21250
	14:45:00	5.0	145.063	32.54	1.01	0.20180
	14:46:00	6.0	145.236	32.36	1.18	0.19700
	14:47:00	7.0	145.380	32.22	1.33	0.18943
	14:48:00	8.0	145.495	32.11	1.44	0.18013
	14:49:00	9.0	145.610	31.99	1.56	0.17289
	14:50:00	10.0	145.726	31.87	1.67	0.16720
	14:51:00	11.0	145.841	31.76	1.79	0.16245
	14:52:00	12.0	145.927	31.67	1.87	0.15608
	14:53:00	13.0	146.028	31.57	1.97	0.15185
	14:54:00	14.0	146.129	31.47	2.07	0.14821
	14:55:00	15.0	146.230	31.37	2.18	0.14507
	15:00:00	20.0	146.691	30.91	2.64	0.13185
	15:05:00	25.0	147.167	30.43	3.11	0.12452
	15:10:00	30.0	147.570	30.03	3.52	0.11720
	15:15:00	35.0	147.988	29.61	3.93	0.11240
	15:20:00	40.0	148.421	29.18	4.37	0.10918

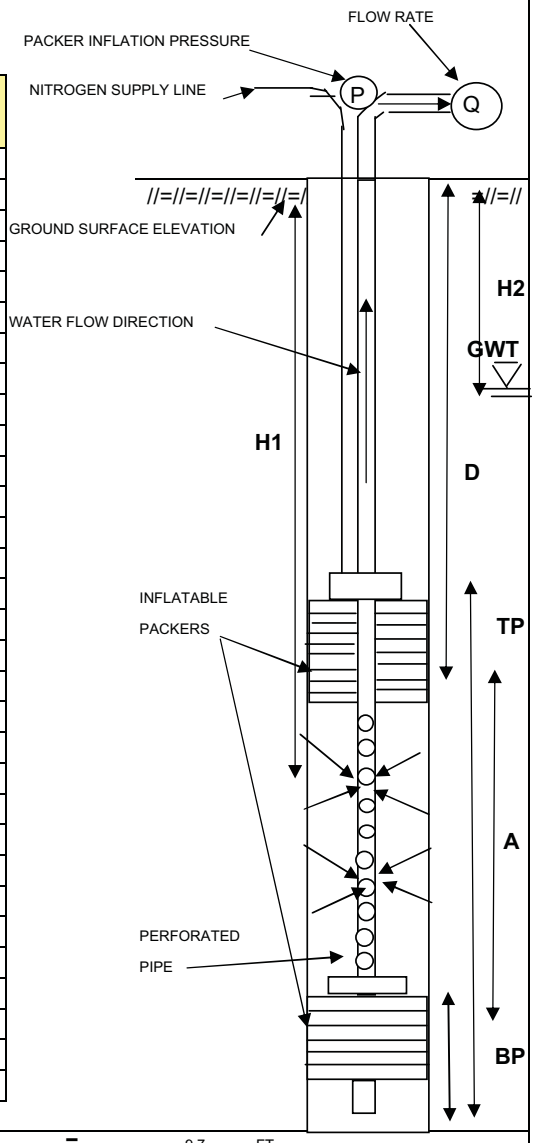

LEGEND:				
	A - TOTAL LENGTH OF TEST SECTION (FT)	=	9.7	FT
	TP - TOTAL LENGTH OF TOP PACKER AND ASSEMBLY	=	15.7	FT
	BP - TOTAL LENGTH OF BOTTOM PACKER AND ASSEMBLY	=	4.65	FT
	D - DISTANCE BETWEEN GROUND SURFACE AND TOP OF THE TEST ZONE	=	172.3	FT
	PIP - PACKER INFLATION PRESSURE (D PSI **+ 50 PSI**)	=	180	PSI
	H1- DISTANCE BETWEEN WATER PRESSURE GAUGE AND GROUND SURFACE	=	177.6	FT
	H2- DISTANCE BETWEEN GROUND SURFACE AND GROUND WATER TABLE	=	11.95	FT

NOTE: Upon packer inflation, Below Zone transducer pressure increased to 241+ ft/water. High connectivity between Below Zone and In Zone was observed during pumping and recovery. Integrity of bottom packer was verified by deflating top packer and discontinuing air pressure on bottom packer. Pressure within bottom packer maintained 180psi. Drill rig winch line holding packer assembly was also slackened to verify integrity of bottom packer.

PACKER TEST LOG

GZA GEOENVIRONMENTAL OF NEW YORK 440 NINTH AVENUE, 18th FLOOR NEW YORK, NEW YORK 10001 SCIENTISTS AND ENGINEERS	Client Entergy Indian Point Energy Cente Buchanan, NY	BORING NO./TEST NO.	MW-60 T3
		SHEET	1 of 1
		FILE NO.	41.0017869.01
		PROJECT LOCATION	Indian Point

CONTRACTOR	Aquifer Drilling & Testing, Inc.	BORING COORDINATES	N 463382.5093	E	604586.4889
FOREMAN	Dave Carter	GROUND SURFACE EL.(FT)	14.31	DATUM	NGVD 29
GZA ENG.	Sara Covelli	FINAL BORING DEPTH (FT)	202	DATE START/END	12/11/06
DIAMETER OF DRILLED BOREHOLE	3.83 INCH	GROUND WATER DEPTH (STATIC WATER LEVEL DEPTH)	13.90	(below grade)	1.83 FT ground to casing
I.D. OF DRILLING RODS	2 INCH				

TESTED INTERVAL FROM / TO (FT)	TIME (HR:MIN)	ELAPSED TIME (Δt MIN)	DEPTH UNDER WATER (FT)	DEPTH TO WATER (FT)	CUMULATIVE RECOVERY (ΔH FT)	RECOVERY RATE (ΔH/Δt)
161.3'-171.0'	11:53:00	0.0	127.834	38.97	0.00	-
L= 9.7 ft	11:54:00	1.0	129.332	37.47	1.50	1.49800
	11:55:00	2.0	130.325	36.48	2.49	1.24550
	11:56:00	3.0	131.175	35.63	3.34	1.11367
	11:57:00	4.0	131.809	34.99	3.97	0.99375
	11:58:00	5.0	132.399	34.40	4.57	0.91300
	11:59:00	6.0	132.947	33.85	5.11	0.85217
	12:00:00	7.0	133.509	33.29	5.67	0.81071
	12:01:00	8.0	134.042	32.76	6.21	0.77600
	12:02:00	9.0	134.560	32.24	6.73	0.74733
	12:03:00	10.0	135.064	31.74	7.23	0.72300
	12:04:00	11.0	135.554	31.25	7.72	0.70182
	12:05:00	12.0	136.044	30.76	8.21	0.68417
	12:06:00	13.0	136.519	30.28	8.69	0.66808
	12:07:00	14.0	136.980	29.82	9.15	0.65329
	12:08:00	15.0	137.441	29.36	9.61	0.64047
	12:09:00	16.0	137.873	28.93	10.04	0.62744
	12:10:00	17.0	138.291	28.51	10.46	0.61512
	12:11:00	18.0	138.723	28.08	10.89	0.60494
	12:12:00	19.0	139.127	27.67	11.29	0.59437
	12:13:00	20.0	139.530	27.27	11.70	0.58480
	12:18:00	25.0	141.389	25.41	13.56	0.54220
	12:23:00	30.0	143.060	23.74	15.23	0.50753
	12:28:00	35.0	144.458	22.34	16.62	0.47497
	12:33:00	40.0	145.711	21.09	17.88	0.44693
	12:38:00	45.0	146.821	19.98	18.99	0.42193
	12:43:00	50.0	147.786	19.01	19.95	0.39904
	12:48:00	55.0	148.622	18.18	20.79	0.37796
	12:52:00	59.0	149.228	17.57	21.39	0.36261

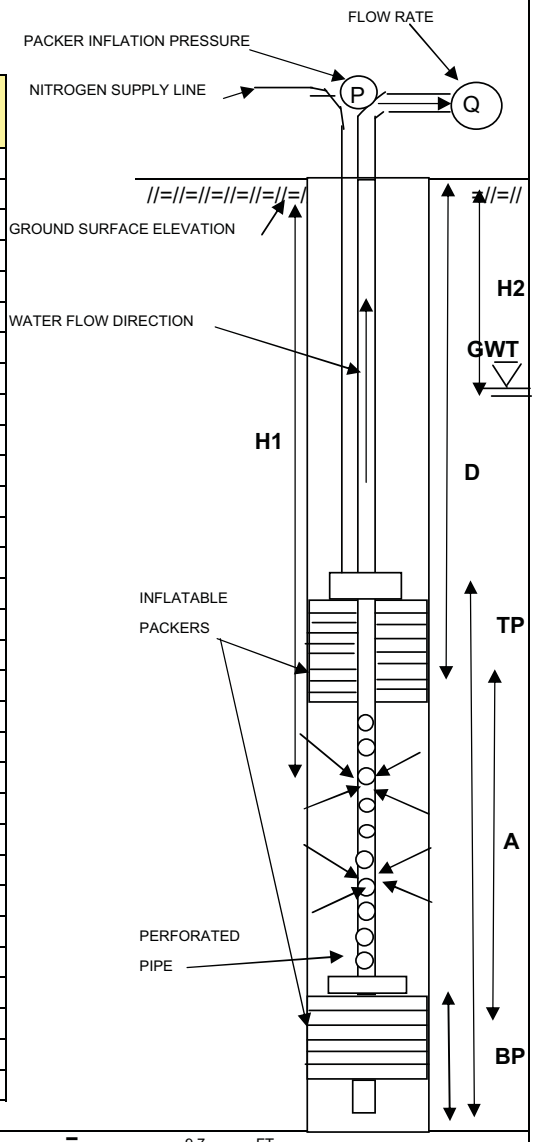

LEGEND:				
	A - TOTAL LENGTH OF TEST SECTION (FT)	=	9.7	FT
	TP - TOTAL LENGTH OF TOP PACKER AND ASSEMBLY	=	15.7	FT
	BP - TOTAL LENGTH OF BOTTOM PACKER AND ASSEMBLY	=	4.65	FT
	D - DISTANCE BETWEEN GROUND SURFACE AND TOP OF THE TEST ZONE	=	161.3	FT
	PIP - PACKER INFLATION PRESSURE (D PSI **+ 50 PSI**)	=	185	PSI
	H1- DISTANCE BETWEEN WATER PRESSURE GAUGE AND GROUND SURFACE	=	166.8	FT
	H2- DISTANCE BETWEEN GROUND SURFACE AND GROUND WATER TABLE	=	13.90	FT

GZA

BORING NO. /TEST NO. MW-60 T3

PACKER TEST LOG

GZA GEOENVIRONMENTAL OF NEW YORK 440 NINTH AVENUE, 18th FLOOR NEW YORK, NEW YORK 10001 SCIENTISTS AND ENGINEERS	Client Entergy Indian Point Energy Cente Buchanan, NY	BORING NO./TEST NO.	MW-60 T4
		SHEET	1 of 1
		FILE NO.	41.0017869.01
		PROJECT LOCATION	Indian Point

CONTRACTOR	Aquifer Drilling & Testing, Inc.	BORING COORDINATES	N 463382.5093	E	604586.4889
FOREMAN	Dave Carter	GROUND SURFACE EL.(FT)	14.31	DATUM	NGVD 29
GZA ENG.	Sara Covelli	FINAL BORING DEPTH (FT)	202	DATE START/END	12/11/06
DIAMETER OF DRILLED BOREHOLE	3.83 INCH	GROUND WATER DEPTH (STATIC WATER LEVEL DEPTH)	13.48 (below grade)		1.83 FT ground to casing
I.D. OF DRILLING RODS	2 INCH				

TESTED INTERVAL FROM / TO (FT)	TIME (HR:MIN)	ELAPSED TIME (Δt MIN)	DEPTH UNDER WATER (FT)	DEPTH TO WATER (FT)	CUMULATIVE RECOVERY (ΔH FT)	RECOVERY RATE (ΔH/Δt)
151.3'-161.0'	13:43:00	0.0	126.451	30.25	0.00	-
L= 9.7 ft	13:44:00	1.0	132.688	24.01	6.24	6.23700
	13:45:00	2.0	136.058	20.64	9.61	4.80350
	13:46:00	3.0	137.816	18.88	11.37	3.78833
	13:47:00	4.0	138.997	17.70	12.55	3.13650
	13:48:00	5.0	139.861	16.84	13.41	2.68200
	13:49:00	6.0	140.524	16.18	14.07	2.34550
	13:50:00	7.0	141.043	15.66	14.59	2.08457
	13:51:00	8.0	141.461	15.24	15.01	1.87625
	13:52:00	9.0	141.792	14.91	15.34	1.70456
	13:53:00	10.0	142.051	14.65	15.60	1.56000
	13:54:00	11.0	142.268	14.43	15.82	1.43791
	13:55:00	12.0	142.455	14.25	16.00	1.33367
	13:56:00	13.0	142.613	14.09	16.16	1.24323
	13:57:00	14.0	142.743	13.96	16.29	1.16371

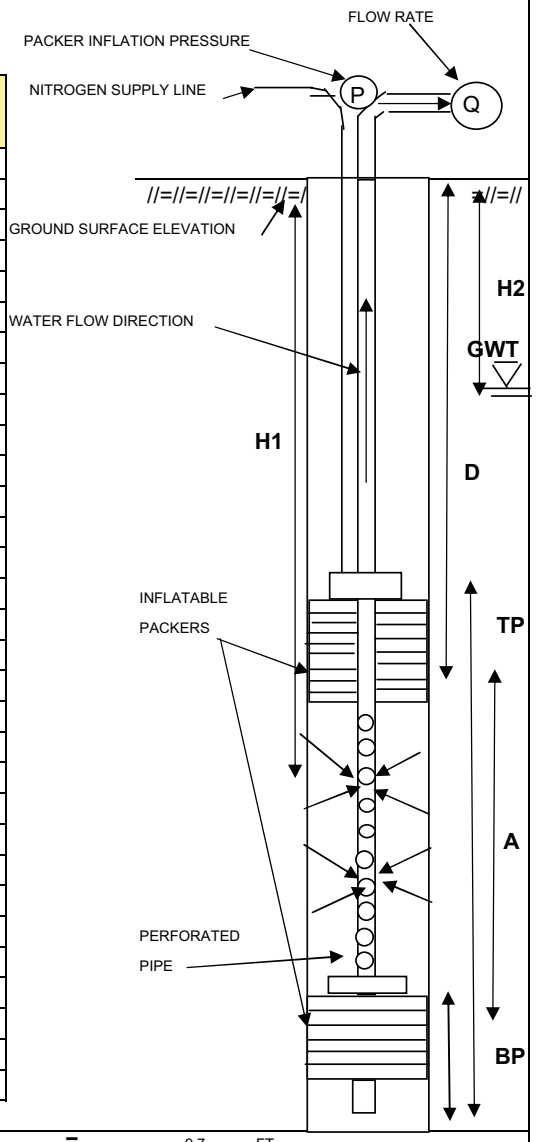

LEGEND:				
	A - TOTAL LENGTH OF TEST SECTION (FT)	=	9.7	FT
	TP - TOTAL LENGTH OF TOP PACKER AND ASSEMBLY	=	15.7	FT
	BP - TOTAL LENGTH OF BOTTOM PACKER AND ASSEMBLY	=	4.65	FT
	D - DISTANCE BETWEEN GROUND SURFACE AND TOP OF THE TEST ZONE	=	151.3	FT
	PIP - PACKER INFLATION PRESSURE (D PSI **+ 50 PSI**)	=	190	PSI
	H1- DISTANCE BETWEEN WATER PRESSURE GAUGE AND GROUND SURFACE	=	156.7	FT
	H2- DISTANCE BETWEEN GROUND SURFACE AND GROUND WATER TABLE	=	13.48	FT

GZA

BORING NO. /TEST NO. MW-60 T4

PACKER TEST LOG

GZA GEOENVIRONMENTAL OF NEW YORK 440 NINTH AVENUE, 18th FLOOR NEW YORK, NEW YORK 10001 SCIENTISTS AND ENGINEERS	Client Entergy Indian Point Energy Cente Buchanan, NY	BORING NO./TEST NO.	MW-60 T5
		SHEET	1 of 1
		FILE NO.	41.0017869.01
		PROJECT LOCATION	Indian Point

CONTRACTOR	Aquifer Drilling & Testing, Inc.	BORING COORDINATES	N 463382.5093	E	604586.4889
FOREMAN	Dave Carter	GROUND SURFACE EL.(FT)	14.31	DATUM	NGVD 29
GZA ENG.	Sara Covelli	FINAL BORING DEPTH (FT)	202	DATE START/END	12/11/06
DIAMETER OF DRILLED BOREHOLE	3.83 INCH	GROUND WATER DEPTH (STATIC WATER LEVEL DEPTH)	12.80 (below grade)		1.83 FT ground to casing
I.D. OF DRILLING RODS	2 INCH				

TESTED INTERVAL FROM / TO (FT)	TIME (HR:MIN)	ELAPSED TIME (Δt MIN)	DEPTH UNDER WATER (FT)	DEPTH TO WATER (FT)	CUMULATIVE RECOVERY (ΔH FT)	RECOVERY RATE (ΔH/Δt)
135.0'-144.7'	15:02:00	0.0	115.004	25.50	0.00	-
L= 9.7 ft	15:03:00	1.0	116.343	24.16	1.34	1.33900
	15:04:00	2.0	117.553	22.95	2.55	1.27450
	15:05:00	3.0	118.632	21.87	3.63	1.20933
	15:06:00	4.0	119.583	20.92	4.58	1.14475
	15:07:00	5.0	120.446	20.05	5.44	1.08840
	15:08:00	6.0	121.238	19.26	6.23	1.03900
	15:09:00	7.0	121.958	18.54	6.95	0.99343
	15:10:00	8.0	122.606	17.89	7.60	0.95025
	15:11:00	9.0	123.182	17.32	8.18	0.90867
	15:12:00	10.0	123.686	16.81	8.68	0.86820
	15:13:00	11.0	124.162	16.34	9.16	0.83255
	15:14:00	12.0	124.594	15.91	9.59	0.79917
	15:15:00	13.0	124.954	15.55	9.95	0.76538
	15:16:00	14.0	125.299	15.20	10.30	0.73536
	15:17:00	15.0	125.587	14.91	10.58	0.70553
	15:18:00	16.0	125.861	14.64	10.86	0.67856
	15:19:00	17.0	126.091	14.41	11.09	0.65218
	15:20:00	18.0	126.293	14.21	11.29	0.62717
	15:21:00	19.0	126.494	14.01	11.49	0.60474
	15:22:00	20.0	126.653	13.85	11.65	0.58245
	15:23:00	21.0	126.797	13.70	11.79	0.56157
	15:24:00	22.0	126.941	13.56	11.94	0.54259
	15:25:00	23.0	127.042	13.46	12.04	0.52339

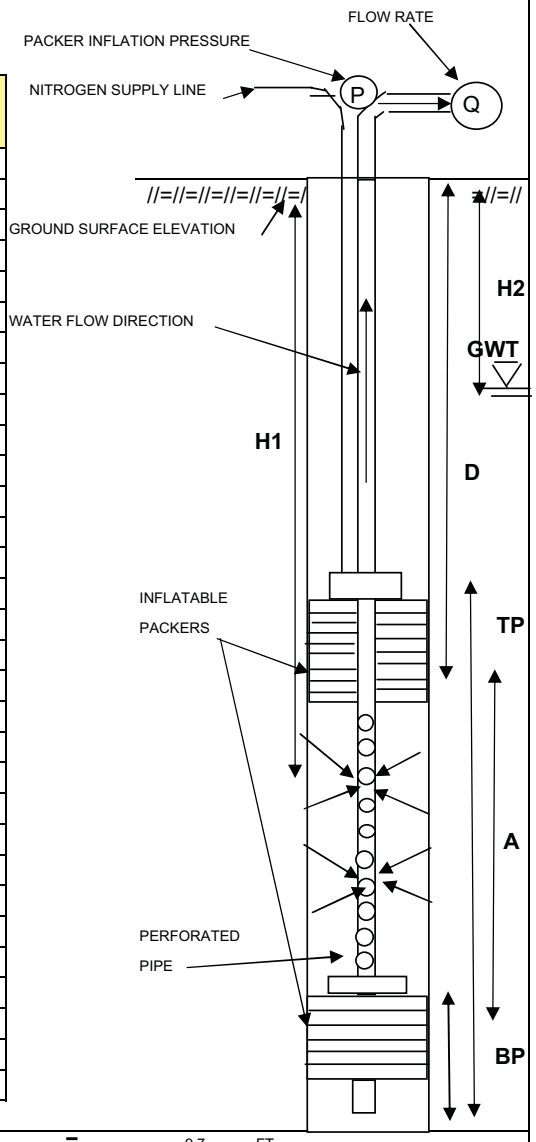

LEGEND:				
	A - TOTAL LENGTH OF TEST SECTION (FT)	=	9.7	FT
	TP - TOTAL LENGTH OF TOP PACKER AND ASSEMBLY	=	15.7	FT
	BP - TOTAL LENGTH OF BOTTOM PACKER AND ASSEMBLY	=	4.65	FT
	D - DISTANCE BETWEEN GROUND SURFACE AND TOP OF THE TEST ZONE	=	135.0	FT
	PIP - PACKER INFLATION PRESSURE (D PSI **+ 50 PSI**)	=	180	PSI
	H1- DISTANCE BETWEEN WATER PRESSURE GAUGE AND GROUND SURFACE	=	140.5	FT
	H2- DISTANCE BETWEEN GROUND SURFACE AND GROUND WATER TABLE	=	12.80	FT

GZA

BORING NO. /TEST NO. MW-60 T5

PACKER TEST LOG

GZA GEOENVIRONMENTAL OF NEW YORK 440 NINTH AVENUE, 18th FLOOR NEW YORK, NEW YORK 10001 SCIENTISTS AND ENGINEERS	Client Entergy Indian Point Energy Cente Buchanan, NY	BORING NO./TEST NO.	MW-60 T6
		SHEET	1 of 1
		FILE NO.	41.0017869.01
		PROJECT LOCATION	Indian Point

CONTRACTOR	Aquifer Drilling & Testing, Inc.	BORING COORDINATES	N 463382.5093	E	604586.4889
FOREMAN	Dave Carter	GROUND SURFACE EL.(FT)	14.31	DATUM	NGVD 29
GZA ENG.	Sara Covelli	FINAL BORING DEPTH (FT)	202	DATE START/END	12/12/06
DIAMETER OF DRILLED BOREHOLE	3.83 INCH	GROUND WATER DEPTH (STATIC WATER LEVEL DEPTH)	13.20 (below grade)		1.83 FT ground to casing
I.D. OF DRILLING RODS	2 INCH				

TESTED INTERVAL FROM / TO (FT)	TIME (HR:MIN)	ELAPSED TIME (Δt MIN)	DEPTH UNDER WATER (FT)	DEPTH TO WATER (FT)	CUMULATIVE RECOVERY (ΔH FT)	RECOVERY RATE (ΔH/Δt)
115.3'-125.0'	9:08:00	0.0	84.701	36.10	0.00	-
L= 9.7 ft	9:09:00	1.0	85.276	35.52	0.58	0.57500
	9:10:00	2.0	85.593	35.21	0.89	0.44600
	9:11:00	3.0	85.808	34.99	1.11	0.36900
	9:12:00	4.0	85.981	34.82	1.28	0.32000
	9:13:00	5.0	86.154	34.65	1.45	0.29060
	9:14:00	6.0	86.312	34.49	1.61	0.26850
	9:15:00	7.0	86.499	34.30	1.80	0.25686
	9:16:00	8.0	86.671	34.13	1.97	0.24625
	9:17:00	9.0	86.830	33.97	2.13	0.23656
	9:18:00	10.0	86.988	33.81	2.29	0.22870
	9:19:00	11.0	87.146	33.65	2.45	0.22227
	9:20:00	12.0	87.304	33.50	2.60	0.21692
	9:21:00	13.0	87.448	33.35	2.75	0.21131
	9:22:00	14.0	87.592	33.21	2.89	0.20650
	9:23:00	15.0	87.750	33.05	3.05	0.20327
	9:24:00	16.0	87.894	32.91	3.19	0.19956
	9:25:00	17.0	88.038	32.76	3.34	0.19629
	9:26:00	18.0	88.196	32.60	3.50	0.19417
	9:27:00	19.0	88.340	32.46	3.64	0.19153
	9:28:00	20.0	88.498	32.30	3.80	0.18985
	9:33:00	25.0	89.189	31.61	4.49	0.17952
	9:38:00	30.0	89.850	30.95	5.15	0.17163
	9:43:00	35.0	90.483	30.32	5.78	0.16520
	9:48:00	40.0	91.217	29.58	6.52	0.16290
	9:53:00	45.0	91.807	28.99	7.11	0.15791

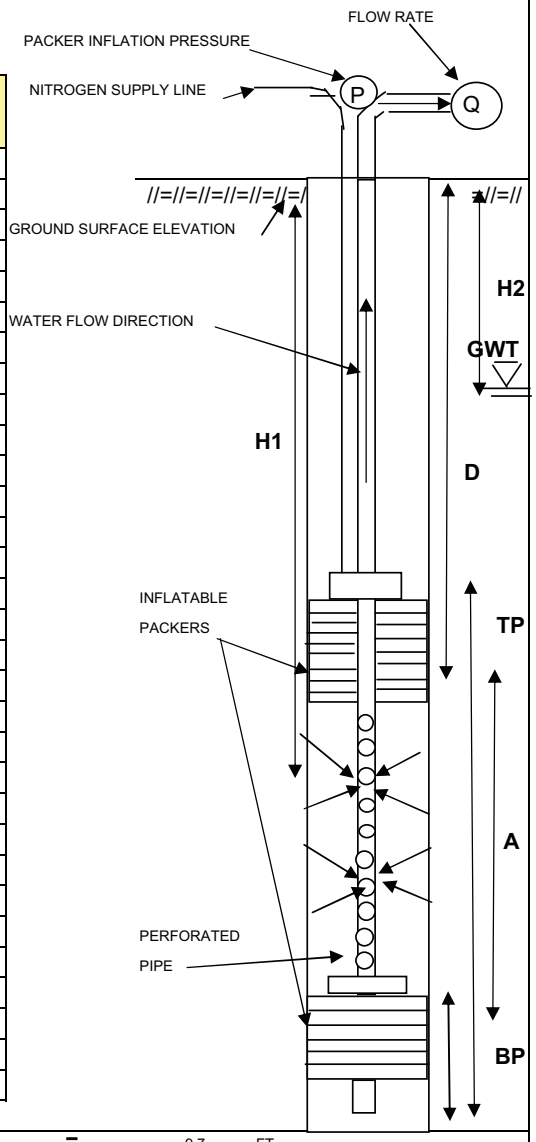

LEGEND:				
	A - TOTAL LENGTH OF TEST SECTION (FT)	=	9.7	FT
	TP - TOTAL LENGTH OF TOP PACKER AND ASSEMBLY	=	15.7	FT
	BP - TOTAL LENGTH OF BOTTOM PACKER AND ASSEMBLY	=	4.65	FT
	D - DISTANCE BETWEEN GROUND SURFACE AND TOP OF THE TEST ZONE	=	115.3	FT
	PIP - PACKER INFLATION PRESSURE (D PSI **+ 50 PSI**)	=	185	PSI
	H1- DISTANCE BETWEEN WATER PRESSURE GAUGE AND GROUND SURFACE	=	120.8	FT
	H2- DISTANCE BETWEEN GROUND SURFACE AND GROUND WATER TABLE	=	13.20	FT

GZA

BORING NO. /TEST NO. MW-60 T6

PACKER TEST LOG

GZA GEOENVIRONMENTAL OF NEW YORK 440 NINTH AVENUE, 18th FLOOR NEW YORK, NEW YORK 10001 SCIENTISTS AND ENGINEERS	Client Entergy Indian Point Energy Cente Buchanan, NY	BORING NO./TEST NO.	MW-60 T7
		SHEET	1 of 1
		FILE NO.	41.0017869.01
		PROJECT LOCATION	Indian Point

CONTRACTOR	Aquifer Drilling & Testing, Inc.	BORING COORDINATES	N 463382.5093	E	604586.4889
FOREMAN	Dave Carter	GROUND SURFACE EL.(FT)	14.31	DATUM	NGVD 29
GZA ENG.	Sara Covelli	FINAL BORING DEPTH (FT)	202	DATE START/END	12/12/06
DIAMETER OF DRILLED BOREHOLE	3.83 INCH	GROUND WATER DEPTH (STATIC WATER LEVEL DEPTH)	13.65 (below grade)		1.83 FT ground to casing
I.D. OF DRILLING RODS	2 INCH				

TESTED INTERVAL FROM / TO (FT)	TIME (HR:MIN)	ELAPSED TIME (Δt MIN)	DEPTH UNDER WATER (FT)	DEPTH TO WATER (FT)	CUMULATIVE RECOVERY (ΔH FT)	RECOVERY RATE (ΔH/Δt)
99.3'-109.0'	10:42:00	0.0	71.558	33.24	0.00	-
L= 9.7 ft	10:43:00	1.0	72.335	32.47	0.78	0.77700
	10:44:00	2.0	73.140	31.66	1.58	0.79100
	10:45:00	3.0	73.873	30.93	2.32	0.77167
	10:46:00	4.0	74.563	30.24	3.01	0.75125
	10:47:00	5.0	75.239	29.56	3.68	0.73620
	10:48:00	6.0	75.871	28.93	4.31	0.71883
	10:49:00	7.0	76.490	28.31	4.93	0.70457
	10:50:00	8.0	77.065	27.74	5.51	0.68837
	10:51:00	9.0	77.654	27.15	6.10	0.67733
	10:52:00	10.0	78.201	26.60	6.64	0.66430
	10:53:00	11.0	78.747	26.05	7.19	0.65355
	10:54:00	12.0	79.251	25.55	7.69	0.64108
	10:55:00	13.0	79.739	25.06	8.18	0.62931
	10:56:00	14.0	80.228	24.57	8.67	0.61929
	10:57:00	15.0	80.689	24.11	9.13	0.60873
	10:58:00	16.0	81.134	23.67	9.58	0.59850
	10:59:00	17.0	81.551	23.25	9.99	0.58782
	11:00:00	18.0	81.968	22.83	10.41	0.57833
	11:01:00	19.0	82.371	22.43	10.81	0.56911
	11:02:00	20.0	82.759	22.04	11.20	0.56005
	11:03:00	21.0	83.119	21.68	11.56	0.55052
	11:04:00	22.0	83.493	21.31	11.94	0.54250
	11:05:00	23.0	83.824	20.98	12.27	0.53330
	11:06:00	24.0	84.169	20.63	12.61	0.52546
	11:07:00	25.0	84.471	20.33	12.91	0.51652
	11:09:00	27.0	85.075	19.73	13.52	0.50063
	11:11:00	29.0	85.621	19.18	14.06	0.48493
	11:13:00	31.0	86.139	18.66	14.58	0.47035
	11:15:00	33.0	86.599	18.20	15.04	0.45579

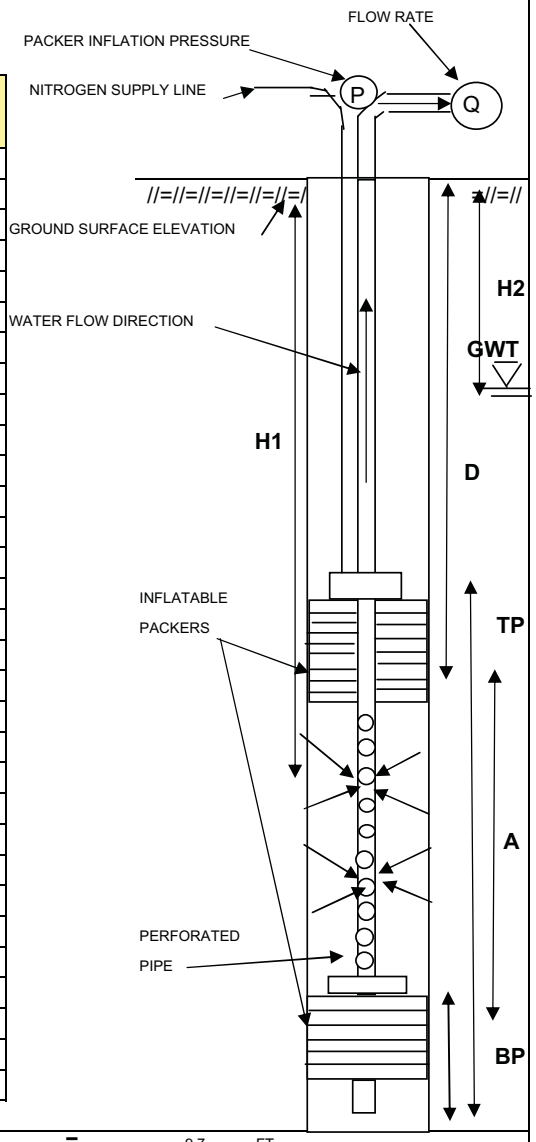

LEGEND:				
	A - TOTAL LENGTH OF TEST SECTION (FT)	=	9.7	FT
	TP - TOTAL LENGTH OF TOP PACKER AND ASSEMBLY	=	15.7	FT
	BP - TOTAL LENGTH OF BOTTOM PACKER AND ASSEMBLY	=	4.65	FT
	D - DISTANCE BETWEEN GROUND SURFACE AND TOP OF THE TEST ZONE	=	99.3	FT
	PIP - PACKER INFLATION PRESSURE (D PSI **+ 50 PSI**)	=	180	PSI
	H1- DISTANCE BETWEEN WATER PRESSURE GAUGE AND GROUND SURFACE	=	104.8	FT
	H2- DISTANCE BETWEEN GROUND SURFACE AND GROUND WATER TABLE	=	13.65	FT

GZA

BORING NO. /TEST NO. MW-60 T7

PACKER TEST LOG

GZA GEOENVIRONMENTAL OF NEW YORK 440 NINTH AVENUE, 18th FLOOR NEW YORK, NEW YORK 10001 SCIENTISTS AND ENGINEERS	Client Entergy Indian Point Energy Cente Buchanan, NY	BORING NO./TEST NO.	MW-60 T8
		SHEET	1 of 1
		FILE NO.	41.0017869.01
		PROJECT LOCATION	Indian Point

CONTRACTOR	Aquifer Drilling & Testing, Inc.	BORING COORDINATES	N 463382.5093	E	604586.4889
FOREMAN	Dave Carter	GROUND SURFACE EL.(FT)	14.31	DATUM	NGVD 29
GZA ENG.	Sara Covelli	FINAL BORING DEPTH (FT)	202	DATE START/END	12/12/06
DIAMETER OF DRILLED BOREHOLE	3.83 INCH	GROUND WATER DEPTH (STATIC WATER LEVEL DEPTH)	14.00 (below grade)		1.83 FT ground to casing
I.D. OF DRILLING RODS	2 INCH				

TESTED INTERVAL FROM / TO (FT)	TIME (HR:MIN)	ELAPSED TIME (Δt MIN)	DEPTH UNDER WATER (FT)	DEPTH TO WATER (FT)	CUMULATIVE RECOVERY (ΔH FT)	RECOVERY RATE (ΔH/Δt)
88.3'-98.0'	11:59:00	0.0	59.010	34.85	0.00	-
L= 9.7 ft	12:00:00	1.0	60.893	32.96	1.88	1.88300
	12:01:00	2.0	62.632	31.22	3.62	1.81100
	12:02:00	3.0	64.199	29.66	5.19	1.72967
	12:03:00	4.0	65.607	28.25	6.60	1.64925
	12:04:00	5.0	66.901	26.95	7.89	1.57820
	12:05:00	6.0	68.079	25.78	9.07	1.51150
	12:06:00	7.0	69.172	24.68	10.16	1.45171
	12:07:00	8.0	70.149	23.71	11.14	1.39238
	12:08:00	9.0	71.070	22.79	12.06	1.34000
	12:09:00	10.0	71.903	21.95	12.89	1.28930
	12:10:00	11.0	72.665	21.19	13.66	1.24136
	12:11:00	12.0	73.384	20.47	14.37	1.19783
	12:12:00	13.0	74.031	19.82	15.02	1.15546
	12:13:00	14.0	74.606	19.25	15.60	1.11400
	12:14:00	15.0	75.153	18.70	16.14	1.07620
	12:15:00	16.0	75.656	18.20	16.65	1.04038
	12:16:00	17.0	76.102	17.75	17.09	1.00541
	12:17:00	18.0	76.518	17.34	17.51	0.97267
	12:18:00	19.0	76.907	16.95	17.90	0.94195
	12:19:00	20.0	77.266	16.59	18.26	0.91280
	12:20:00	21.0	77.583	16.27	18.57	0.88443
	12:21:00	22.0	77.856	16.00	18.85	0.85664
	12:22:00	23.0	78.199	15.66	19.19	0.83430
	12:23:00	24.0	78.388	15.47	19.38	0.80742
	12:24:00	25.0	78.603	15.25	19.59	0.78372
	12:29:00	30.0	79.581	14.27	20.57	0.68570
	12:34:00	35.0	80.070	13.79	21.06	0.60171
	12:39:00	40.0	80.387	13.47	21.38	0.53443
	12:44:00	45.0	80.559	13.30	21.55	0.47887

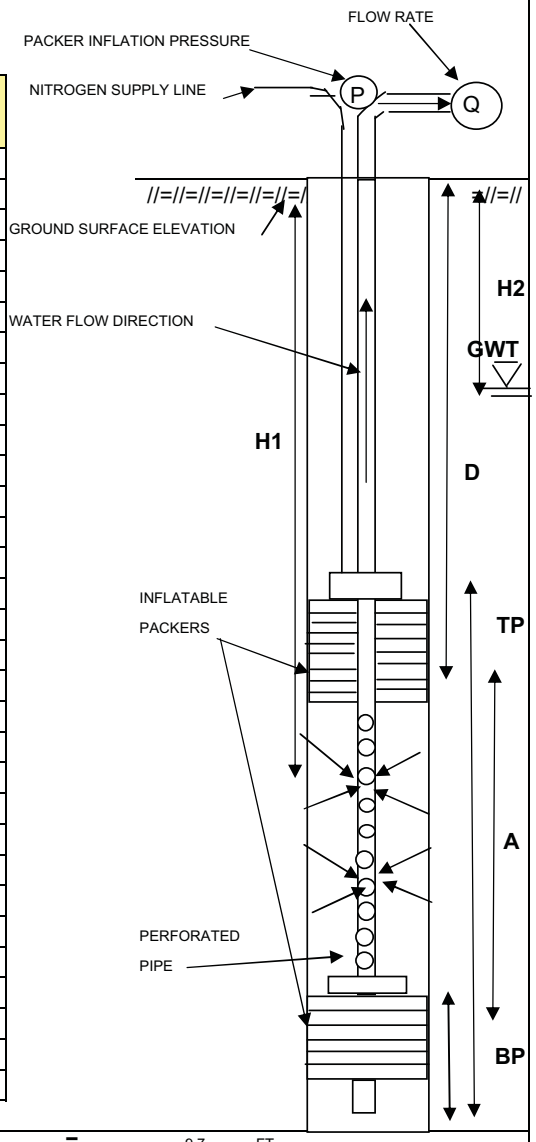

LEGEND:				
	A - TOTAL LENGTH OF TEST SECTION (FT)	=	9.7	FT
	TP - TOTAL LENGTH OF TOP PACKER AND ASSEMBLY	=	15.7	FT
	BP - TOTAL LENGTH OF BOTTOM PACKER AND ASSEMBLY	=	4.65	FT
	D - DISTANCE BETWEEN GROUND SURFACE AND TOP OF THE TEST ZONE	=	88.3	FT
	PIP - PACKER INFLATION PRESSURE (D PSI **+ 50 PSI**)	=	180	PSI
	H1- DISTANCE BETWEEN WATER PRESSURE GAUGE AND GROUND SURFACE	=	93.855	FT
	H2- DISTANCE BETWEEN GROUND SURFACE AND GROUND WATER TABLE	=	14.00	FT

GZA

BORING NO. /TEST NO. MW-60 T8

PACKER TEST LOG

GZA GEOENVIRONMENTAL OF NEW YORK 440 NINTH AVENUE, 18th FLOOR NEW YORK, NEW YORK 10001 SCIENTISTS AND ENGINEERS	Client Entergy Indian Point Energy Cente Buchanan, NY	BORING NO./TEST NO.	MW-60 T9
		SHEET	1 of 1
		FILE NO.	41.0017869.01
		PROJECT LOCATION	Indian Point

CONTRACTOR	Aquifer Drilling & Testing, Inc.	BORING COORDINATES	N 463382.5093	E	604586.4889
FOREMAN	Dave Carter	GROUND SURFACE EL.(FT)	14.31	DATUM	NGVD 29
GZA ENG.	Sara Covelli	FINAL BORING DEPTH (FT)	202	DATE START/END	12/13/06
DIAMETER OF DRILLED BOREHOLE	3.83 INCH	GROUND WATER DEPTH (STATIC WATER LEVEL DEPTH)	12.25 (below grade)		1.83 FT ground to casing
I.D. OF DRILLING RODS	2 INCH				

TESTED INTERVAL FROM / TO (FT)	TIME (HR:MIN)	ELAPSED TIME (Δt MIN)	DEPTH UNDER WATER (FT)	DEPTH TO WATER (FT)	CUMULATIVE RECOVERY (ΔH FT)	RECOVERY RATE (ΔH/Δt)
69.0-78.7'	9:28:00	0.0	42.072	32.43	0.00	-
L= 9.7 ft	9:29:00	1.0	44.643	29.86	2.57	2.57100
	9:30:00	2.0	46.941	27.56	4.87	2.43450
	9:31:00	3.0	48.938	25.56	6.87	2.28867
	9:32:00	4.0	50.720	23.78	8.65	2.16200
	9:33:00	5.0	52.257	22.24	10.19	2.03700
	9:34:00	6.0	53.636	20.86	11.56	1.92733
	9:35:00	7.0	54.814	19.69	12.74	1.82029
	9:36:00	8.0	55.849	18.65	13.78	1.72213
	9:37:00	9.0	56.754	17.75	14.68	1.63133
	9:38:00	10.0	57.530	16.97	15.46	1.54580
	9:39:00	11.0	58.220	16.28	16.15	1.46800
	9:40:00	12.0	58.780	15.72	16.71	1.39233
	9:41:00	13.0	59.283	15.22	17.21	1.32392
	9:42:00	14.0	59.700	14.80	17.63	1.25914
	9:43:00	15.0	60.074	14.43	18.00	1.20013
	9:44:00	16.0	60.361	14.14	18.29	1.14306
	9:45:00	17.0	60.634	13.87	18.56	1.09188
	9:46:00	18.0	60.864	13.64	18.79	1.04400
	9:47:00	19.0	61.037	13.46	18.97	0.99816
	9:48:00	20.0	61.195	13.31	19.12	0.95615
	9:49:00	21.0	61.310	13.19	19.24	0.91610
	9:50:00	22.0	61.425	13.08	19.35	0.87968
	9:51:00	23.0	61.511	12.99	19.44	0.84517
	9:52:00	24.0	61.611	12.89	19.54	0.81413
	9:53:00	25.0	61.683	12.82	19.61	0.78444
	9:54:00	26.0	61.726	12.77	19.65	0.75592

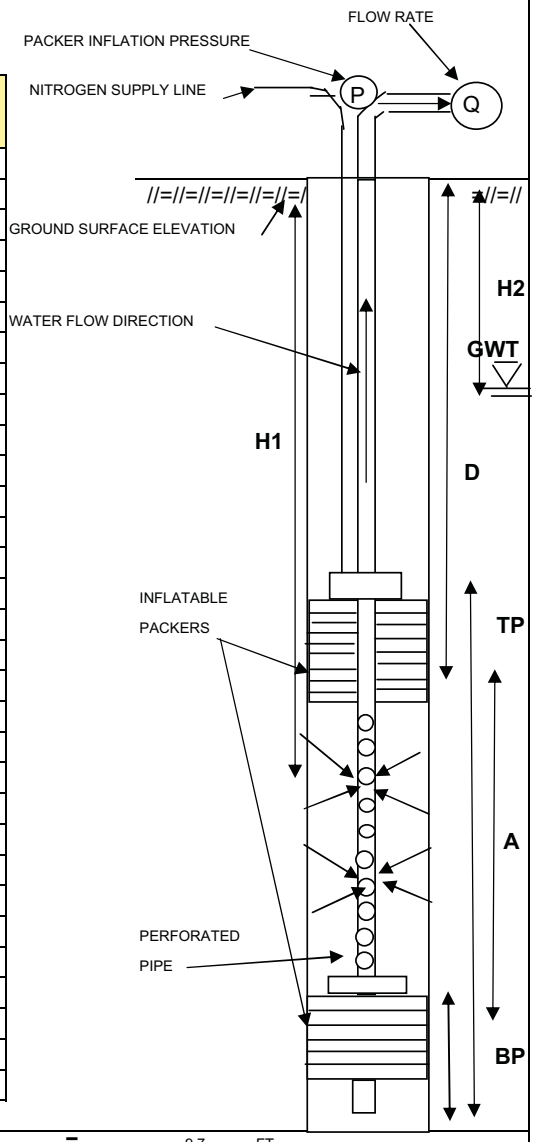

LEGEND:				
	A - TOTAL LENGTH OF TEST SECTION (FT)	=	9.7	FT
	TP - TOTAL LENGTH OF TOP PACKER AND ASSEMBLY	=	15.7	FT
	BP - TOTAL LENGTH OF BOTTOM PACKER AND ASSEMBLY	=	4.65	FT
	D - DISTANCE BETWEEN GROUND SURFACE AND TOP OF THE TEST ZONE	=	69.0	FT
	PIP - PACKER INFLATION PRESSURE (D PSI **+ 50 PSI**)	=	180	PSI
	H1- DISTANCE BETWEEN WATER PRESSURE GAUGE AND GROUND SURFACE	=	74.5	FT
	H2- DISTANCE BETWEEN GROUND SURFACE AND GROUND WATER TABLE	=	12.25	FT

GZA

BORING NO. /TEST NO. MW-60 T9

PACKER TEST LOG

GZA GEOENVIRONMENTAL OF NEW YORK 440 NINTH AVENUE, 18th FLOOR NEW YORK, NEW YORK 10001 SCIENTISTS AND ENGINEERS	Client Entergy Indian Point Energy Cente Buchanan, NY	BORING NO./TEST NO.	MW-60 T10
		SHEET	1 of 1
		FILE NO.	41.0017869.01
		PROJECT LOCATION	Indian Point

CONTRACTOR	Aquifer Drilling & Testing, Inc.	BORING COORDINATES	N 463382.5093	E	604586.4889
FOREMAN	Dave Carter	GROUND SURFACE EL.(FT)	14.31	DATUM	NGVD 29
GZA ENG.	Sara Covelli	FINAL BORING DEPTH (FT)	202	DATE START/END	12/13/06
DIAMETER OF DRILLED BOREHOLE	3.83 INCH	GROUND WATER DEPTH (STATIC WATER LEVEL DEPTH)	13.13	(below grade)	1.83 FT ground to casing
I.D. OF DRILLING RODS	2 INCH				

TESTED INTERVAL FROM / TO (FT)	TIME (HR:MIN)	ELAPSED TIME (Δt MIN)	DEPTH UNDER WATER (FT)	DEPTH TO WATER (FT)	CUMULATIVE RECOVERY (ΔH FT)	RECOVERY RATE (ΔH/Δt)
50.3-60.0	10:40:00	0.0	28.617	27.28	0.00	-
L= 9.7 ft	10:41:00	1.0	32.651	23.25	4.03	4.03400
	10:42:00	2.0	35.523	20.38	6.91	3.45300
	10:43:00	3.0	37.562	18.34	8.95	2.98167
	10:44:00	4.0	39.027	16.87	10.41	2.60250
	10:45:00	5.0	40.047	15.85	11.43	2.28600
	10:46:00	6.0	40.779	15.12	12.16	2.02700
	10:47:00	7.0	41.325	14.58	12.71	1.81543
	10:48:00	8.0	41.698	14.20	13.08	1.63513
	10:49:00	9.0	41.971	13.93	13.35	1.48378
	10:50:00	10.0	42.187	13.71	13.57	1.35700
	10:51:00	11.0	42.330	13.57	13.71	1.24664
	10:52:00	12.0	42.460	13.44	13.84	1.15358
	10:53:00	13.0	42.546	13.35	13.93	1.07146
	10:54:00	14.0	42.603	13.30	13.99	0.99900
	10:55:00	15.0	42.661	13.24	14.04	0.93627

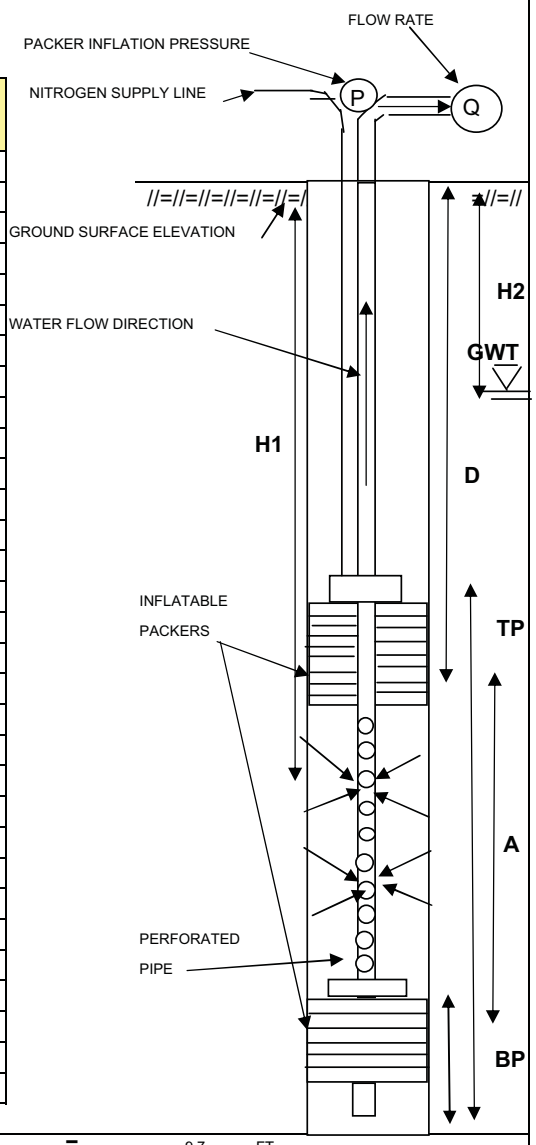

LEGEND:				
	A - TOTAL LENGTH OF TEST SECTION (FT)	=	9.7	FT
	TP - TOTAL LENGTH OF TOP PACKER AND ASSEMBLY	=	15.7	FT
	BP - TOTAL LENGTH OF BOTTOM PACKER AND ASSEMBLY	=	4.65	FT
	D - DISTANCE BETWEEN GROUND SURFACE AND TOP OF THE TEST ZONE	=	50.3	FT
	PIP - PACKER INFLATION PRESSURE (D PSI **+ 50 PSI**)	=	180	PSI
	H1- DISTANCE BETWEEN WATER PRESSURE GAUGE AND GROUND SURFACE	=	55.9	FT
	H2- DISTANCE BETWEEN GROUND SURFACE AND GROUND WATER TABLE	=	13.13	FT

GZA

BORING NO. /TEST NO. MW-60 T10

PACKER TEST LOG

GZA GEOENVIRONMENTAL OF NEW YORK 440 NINTH AVENUE, 18th FLOOR NEW YORK, NEW YORK 10001 SCIENTISTS AND ENGINEERS	Client Entergy Indian Point Energy Cente Buchanan, NY	BORING NO./TEST NO.	MW-60 T11
		SHEET	1 of 1
		FILE NO.	41.0017869.01
		PROJECT LOCATION	Indian Point

CONTRACTOR	Aquifer Drilling & Testing, Inc.	BORING COORDINATES	N 463382.5093	E	604586.4889
FOREMAN	Dave Carter	GROUND SURFACE EL.(FT)	14.31	DATUM	NGVD 29
GZA ENG.	Sara Covelli	FINAL BORING DEPTH (FT)	202	DATE START/END	12/13/06
DIAMETER OF DRILLED BOREHOLE	3.83 INCH	GROUND WATER DEPTH (STATIC WATER LEVEL DEPTH)	13.51 (below grade)		1.83 FT ground to casing
I.D. OF DRILLING RODS	2 INCH				

TESTED INTERVAL FROM / TO (FT)	TIME (HR:MIN)	ELAPSED TIME (Δt MIN)	DEPTH UNDER WATER (FT)	DEPTH TO WATER (FT)	CUMULATIVE RECOVERY (ΔH FT)	RECOVERY RATE (ΔH/Δt)
34.3-44.0'	11:43:00	0.0	4.047	36.05	0.00	-
L= 9.7 ft	11:44:00	1.0	4.334	35.77	0.29	0.28700
	11:45:00	2.0	4.894	35.21	0.85	0.42350
	11:46:00	3.0	5.539	34.56	1.49	0.49733
	11:47:00	4.0	6.056	34.04	2.01	0.50225
	11:48:00	5.0	6.558	33.54	2.51	0.50220
	11:49:00	6.0	7.017	33.08	2.97	0.49500
	11:50:00	7.0	7.476	32.62	3.43	0.48986
	11:51:00	8.0	7.921	32.18	3.87	0.48425
	11:52:00	9.0	8.337	31.76	4.29	0.47667
	11:53:00	10.0	8.739	31.36	4.69	0.46920
	11:54:00	11.0	8.997	31.10	4.95	0.45000
	11:55:00	12.0	9.155	30.95	5.11	0.42567
	11:56:00	13.0	9.313	30.79	5.27	0.40508
	11:57:00	14.0	9.471	30.63	5.42	0.38743
	11:58:00	15.0	9.614	30.49	5.57	0.37113
	12:03:00	20.0	10.375	29.73	6.33	0.31640
	12:08:00	25.0	11.106	28.99	7.06	0.28236
	12:13:00	30.0	11.824	28.28	7.78	0.25923
	12:18:00	35.0	12.513	27.59	8.47	0.24189
	12:23:00	40.0	13.187	26.91	9.14	0.22850
	12:28:00	45.0	13.818	26.28	9.77	0.21713
	12:33:00	50.0	14.450	25.65	10.40	0.20806
	12:38:00	55.0	15.038	25.06	10.99	0.19984
	12:43:00	60.0	15.627	24.47	11.58	0.19300
	12:48:00	65.0	16.172	23.93	12.13	0.18654
	12:53:00	70.0	16.703	23.40	12.66	0.18080
	12:58:00	75.0	17.205	22.90	13.16	0.17544
	13:03:00	80.0	17.707	22.39	13.66	0.17075
	13:08:00	85.0	18.267	21.83	14.22	0.16729

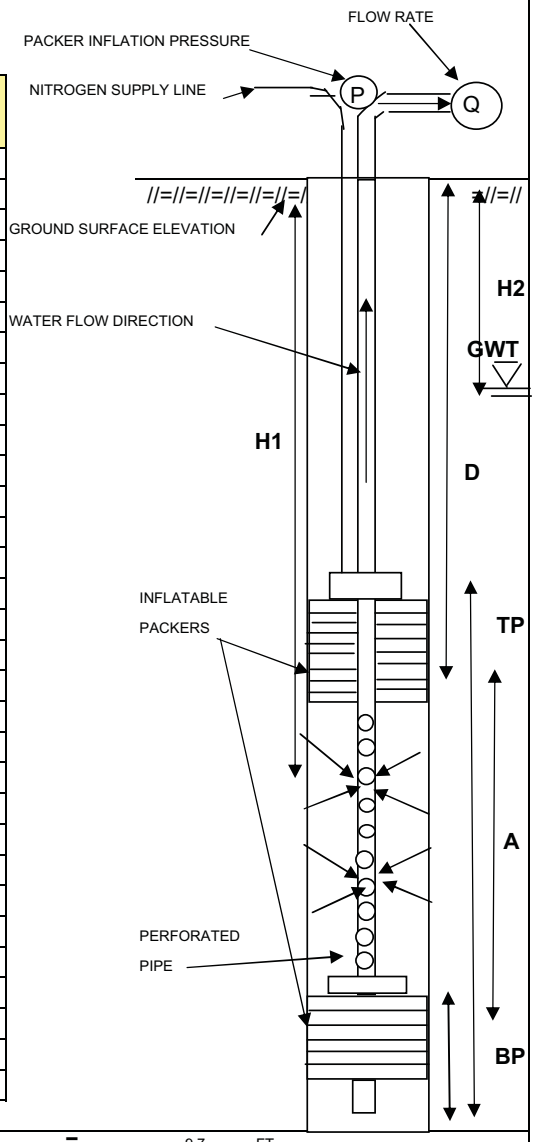

LEGEND:				
	A - TOTAL LENGTH OF TEST SECTION (FT)	=	9.7	FT
	TP - TOTAL LENGTH OF TOP PACKER AND ASSEMBLY	=	15.7	FT
	BP - TOTAL LENGTH OF BOTTOM PACKER AND ASSEMBLY	=	4.65	FT
	D - DISTANCE BETWEEN GROUND SURFACE AND TOP OF THE TEST ZONE	=	34.3	FT
	PIP - PACKER INFLATION PRESSURE (D PSI **+ 50 PSI**)	=	180	PSI
	H1- DISTANCE BETWEEN WATER PRESSURE GAUGE AND GROUND SURFACE	=	40.1	FT
	H2- DISTANCE BETWEEN GROUND SURFACE AND GROUND WATER TABLE	=	13.51	FT

GZA

BORING NO. /TEST NO. MW-60 T11

PACKER TEST LOG

GZA GEOENVIRONMENTAL OF NEW YORK 440 NINTH AVENUE, 18th FLOOR NEW YORK, NEW YORK 10001 SCIENTISTS AND ENGINEERS	Client Entergy Indian Point Energy Cente Buchanan, NY	BORING NO./TEST NO.	MW-60 T12
		SHEET	1 of 1
		FILE NO.	41.0017869.01
		PROJECT LOCATION	Indian Point

CONTRACTOR	Aquifer Drilling & Testing, Inc.	BORING COORDINATES	N 463382.5093	E	604586.4889
FOREMAN	Dave Carter	GROUND SURFACE EL.(FT)	14.31	DATUM	NGVD 29
GZA ENG.	Sara Covelli	FINAL BORING DEPTH (FT)	202	DATE START/END	12/13/06
DIAMETER OF DRILLED BOREHOLE	3.83 INCH	GROUND WATER DEPTH (STATIC WATER LEVEL DEPTH)	13.57 (below grade)		1.83 FT ground to casing
I.D. OF DRILLING RODS	2 INCH				

TESTED INTERVAL FROM / TO (FT)	TIME (HR:MIN)	ELAPSED TIME (Δt MIN)	DEPTH UNDER WATER (FT)	DEPTH TO WATER (FT)	CUMULATIVE RECOVERY (ΔH FT)	RECOVERY RATE (ΔH/Δt)
10.2-29.0'	14:50:00	0.0	3.158	22.14	0.00	-
L= 17.8 ft	14:51:00	1.0	3.158	22.14	0.00	0.00000
	14:52:00	2.0	3.172	22.13	0.01	0.00700
	14:53:00	3.0	3.244	22.06	0.09	0.02867
	14:54:00	4.0	3.273	22.03	0.11	0.02875
	14:55:00	5.0	3.287	22.01	0.13	0.02580
	15:00:00	10.0	3.258	22.04	0.10	0.01000
	15:05:00	15.0	3.244	22.06	0.09	0.00573
	15:10:00	20.0	3.258	22.04	0.10	0.00500
	15:15:00	25.0	3.287	22.01	0.13	0.00516
	15:20:00	30.0	3.330	21.97	0.17	0.00573

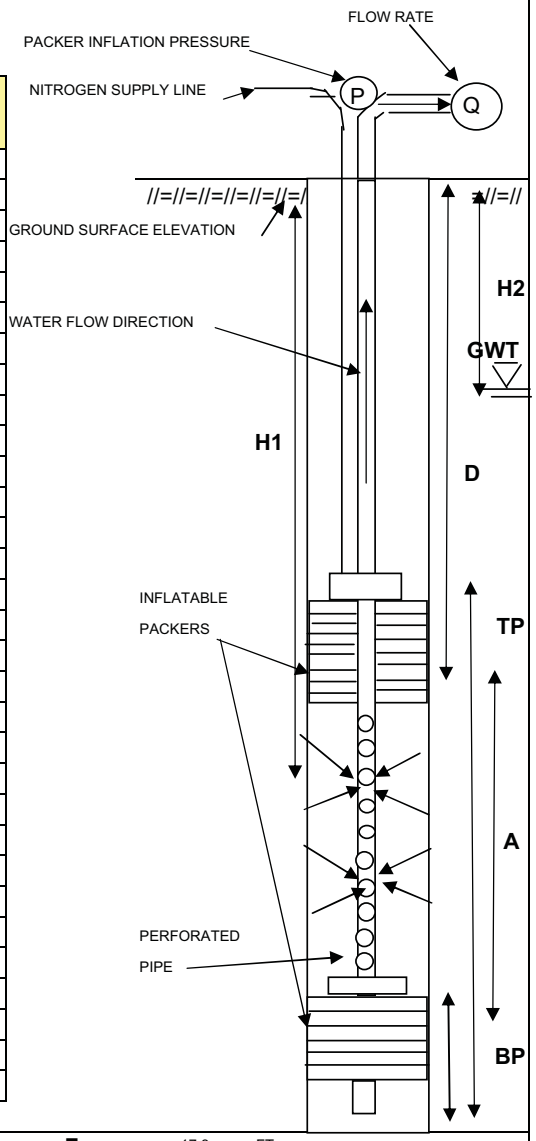

LEGEND:				
	A - TOTAL LENGTH OF TEST SECTION (FT)	=	17.8	FT
	TP - TOTAL LENGTH OF TOP PACKER AND ASSEMBLY	=	15.7	FT
	BP - TOTAL LENGTH OF BOTTOM PACKER AND ASSEMBLY	=	4.65	FT
	D - DISTANCE BETWEEN GROUND SURFACE AND TOP OF THE TEST ZONE	=	1.2	FT
	PIP - PACKER INFLATION PRESSURE (D PSI **+ 50 PSI**)	=	180	PSI
	H1- DISTANCE BETWEEN WATER PRESSURE GAUGE AND GROUND SURFACE	=	25.3	FT
	H2- DISTANCE BETWEEN GROUND SURFACE AND GROUND WATER TABLE	=	13.57	FT

NOTES:

The tested interval begins at the bottom of the well casing (10.2 ft b/g) and ends at 29.0 ft b/g.

Above zone transducer for this test was not installed until 14:35, after packers were inflated. During drawdown and recovery for this test, top packer was used only as a secondary source of data for In Zone transducer. Water level was drawn below AZ transducer.

At time of packer inflation, both packers were inflated. At 14:41, pump was run at 1.25 gpm to test connectivity between the intervals 19.3'-29.0' b/g and 10.2'-19.3' b/g. No connectivity was observed. Pump was turned off at 14:42 and top packer was deflated at 14:45.

After 3/4 hour, less than 0.3' recovery was observed at this test interval. "Recovery" sample was not taken for this test interval.

PACKER TEST LOG

GZA GEOENVIRONMENTAL OF NEW YORK 440 NINTH AVENUE, 18th FLOOR NEW YORK, NEW YORK 10001 SCIENTISTS AND ENGINEERS	Client Entergy Indian Point Energy Cente Buchanan, NY	BORING NO./TEST NO.	MW-62 T1
		SHEET	1 of 1
		FILE NO.	41.0017869.01
		PROJECT LOCATION	Indian Point

CONTRACTOR	Aquifer Drilling & Testing, Inc.	BORING COORDINATES	N 463087.4034	E	604349.9123
FOREMAN	Dave Carter	GROUND SURFACE EL.(FT)	14.69	DATUM	NGVD 29
GZA ENG.	Sara Covelli	FINAL BORING DEPTH (FT)	202	DATE START/END	12/19/06
DIAMETER OF DRILLED BOREHOLE	3.83 INCH	GROUND WATER DEPTH (STATIC WATER LEVEL DEPTH)	11.48 (below grade)		1.87 FT ground to casing
I.D. OF DRILLING RODS	2 INCH				

TESTED INTERVAL FROM / TO (FT)	TIME (HR:MIN)	ELAPSED TIME (Δt MIN)	DEPTH UNDER WATER (FT)	DEPTH TO WATER (FT)	CUMULATIVE RECOVERY (ΔH FT)	RECOVERY RATE (ΔH/Δt)
186.6-200.5'	14:22:00	0.0	153.277	34.82	0.00	-
L= 13.9 ft	14:23:00	1.0	156.996	31.10	3.72	3.71900
	14:24:00	2.0	160.297	27.80	7.02	3.51000
	14:25:00	3.0	163.022	25.08	9.75	3.24833
	14:26:00	4.0	165.315	22.79	12.04	3.00950
	14:27:00	5.0	167.204	20.90	13.93	2.78540
	14:28:00	6.0	168.833	19.27	15.56	2.59267
	14:29:00	7.0	170.160	17.94	16.88	2.41186
	14:30:00	8.0	171.270	16.83	17.99	2.24913
	14:31:00	9.0	172.164	15.94	18.89	2.09856
	14:32:00	10.0	172.871	15.23	19.59	1.95940
	14:33:00	11.0	173.448	14.65	20.17	1.83373
	14:34:00	12.0	173.967	14.13	20.69	1.72417
	14:35:00	13.0	174.371	13.73	21.09	1.62262
	14:36:00	14.0	174.732	13.37	21.46	1.53250
	14:37:00	15.0	175.034	13.07	21.76	1.45047

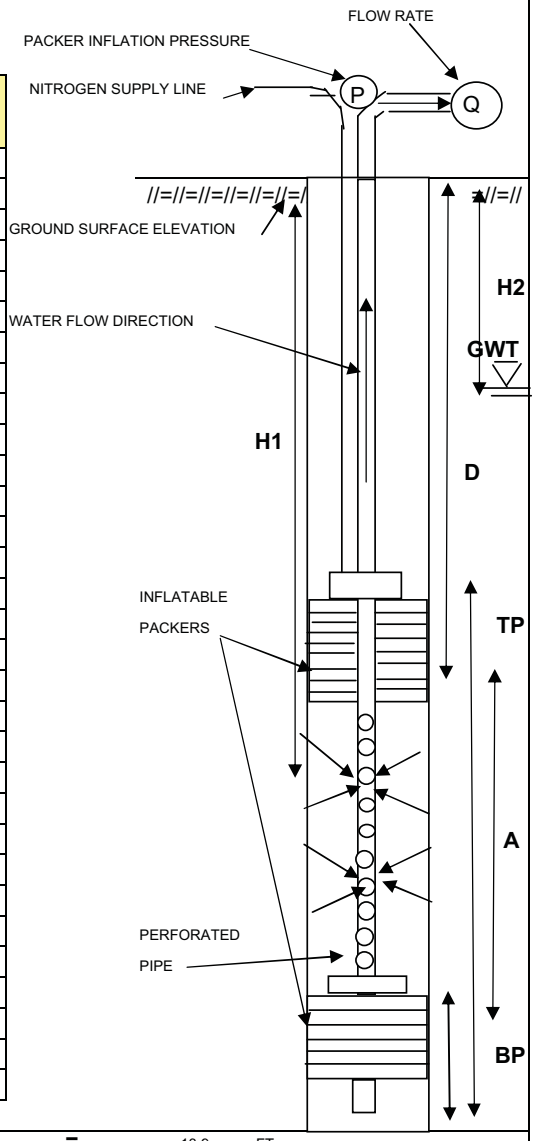

LEGEND:				
A - TOTAL LENGTH OF TEST SECTION (FT)	=	13.9	FT
TP - TOTAL LENGTH OF TOP PACKER AND ASSEMBLY	=	15.7	FT
BP - TOTAL LENGTH OF BOTTOM PACKER AND ASSEMBLY	=	4.65	FT
D - DISTANCE BETWEEN GROUND SURFACE AND TOP OF THE TEST ZONE	=	186.6	FT
PIP - PACKER INFLATION PRESSURE (D PSI **+ 50 PSI**)	=	180	PSI
H1- DISTANCE BETWEEN WATER PRESSURE GAUGE AND GROUND SURFACE	=	188.1	FT
H2- DISTANCE BETWEEN GROUND SURFACE AND GROUND WATER TABLE	=	11.48	FT

NOTE: Only the top packer was inflated for this test. The interval tested here may be considered from 186.6' b/g to bottom of well.

GZA

BORING NO. /TEST NO. MW-62 T1

PACKER TEST LOG

GZA GEOENVIRONMENTAL OF NEW YORK 440 NINTH AVENUE, 18th FLOOR NEW YORK, NEW YORK 10001 SCIENTISTS AND ENGINEERS	Client Entergy Indian Point Energy Cente Buchanan, NY	BORING NO./TEST NO.	MW-62 T2
		SHEET	1 of 1
		FILE NO.	41.0017869.01
		PROJECT LOCATION	Indian Point

CONTRACTOR	Aquifer Drilling & Testing, Inc.	BORING COORDINATES	N 463087.4034	E	604349.9123
FOREMAN	Dave Carter	GROUND SURFACE EL.(FT)	14.69	DATUM	NGVD 29
GZA ENG.	Sara Covelli	FINAL BORING DEPTH (FT)	202	DATE START/END	12/19/06
DIAMETER OF DRILLED BOREHOLE	3.83 INCH	GROUND WATER DEPTH (STATIC WATER LEVEL DEPTH)	12.35	(below grade)	1.87 FT ground to casing
I.D. OF DRILLING RODS	2 INCH				

TESTED INTERVAL FROM / TO (FT)	TIME (HR:MIN)	ELAPSED TIME (Δt MIN)	DEPTH UNDER WATER (FT)	DEPTH TO WATER (FT)	CUMULATIVE RECOVERY (ΔH FT)	RECOVERY RATE (ΔH/Δt)
176.0-185.7	10:05:00	0.0	142.037	36.66	0.00	-
L= 9.7 ft	10:06:00	1.0	146.951	31.75	4.91	4.91400
	10:07:00	2.0	151.101	27.60	9.06	4.53200
	10:08:00	3.0	154.531	24.17	12.49	4.16467
	10:09:00	4.0	157.328	21.37	15.29	3.82275
	10:10:00	5.0	159.548	19.15	17.51	3.50220
	10:11:00	6.0	161.307	17.39	19.27	3.21167
	10:12:00	7.0	162.647	16.05	20.61	2.94429
	10:13:00	8.0	163.671	15.03	21.63	2.70425
	10:14:00	9.0	164.435	14.27	22.40	2.48867
	10:15:00	10.0	164.998	13.70	22.96	2.29610
	10:16:00	11.0	165.401	13.30	23.36	2.12400
	10:17:00	12.0	165.690	13.01	23.65	1.97108
	10:18:00	13.0	165.892	12.81	23.86	1.83500
	10:19:00	14.0	166.050	12.65	24.01	1.71521
	10:20:00	15.0	166.151	12.55	24.11	1.60760
	10:21:00	16.0	166.238	12.46	24.20	1.51256
	10:22:00	17.0	166.295	12.41	24.26	1.42694
	10:23:00	18.0	166.324	12.38	24.29	1.34928
	10:24:00	19.0	166.382	12.32	24.35	1.28132
	10:25:00	20.0	166.411	12.29	24.37	1.21870
	10:26:00	21.0	166.425	12.28	24.39	1.16133
	10:27:00	22.0	166.454	12.25	24.42	1.10986

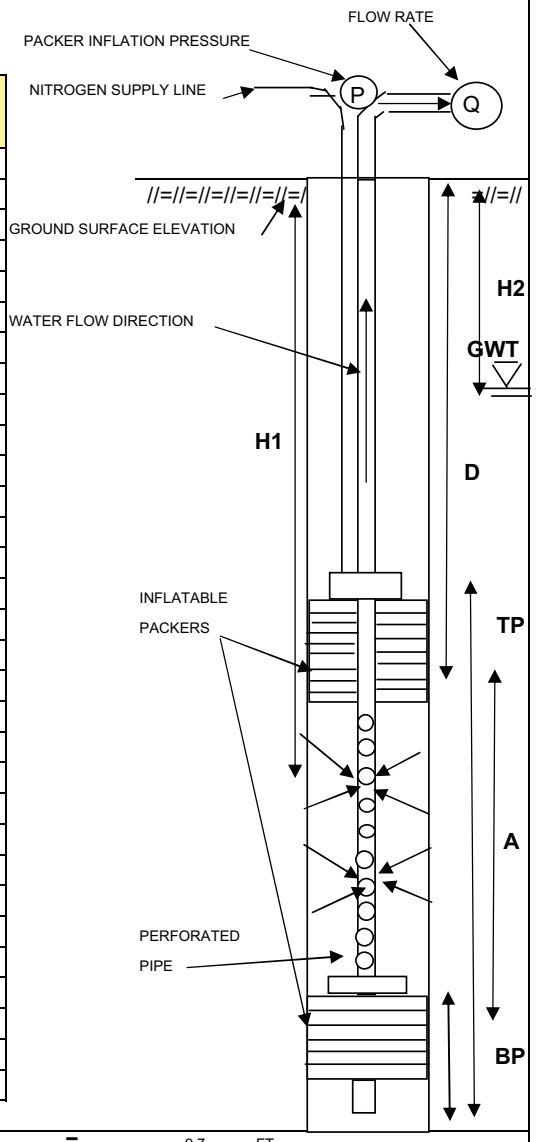

LEGEND:				
	A - TOTAL LENGTH OF TEST SECTION (FT)	=	9.7	FT
	TP - TOTAL LENGTH OF TOP PACKER AND ASSEMBLY	=	15.7	FT
	BP - TOTAL LENGTH OF BOTTOM PACKER AND ASSEMBLY	=	4.65	FT
	D - DISTANCE BETWEEN GROUND SURFACE AND TOP OF THE TEST ZONE	=	176.0	FT
	PIP - PACKER INFLATION PRESSURE (D PSI **+ 50 PSI**)	=	180	PSI
	H1- DISTANCE BETWEEN WATER PRESSURE GAUGE AND GROUND SURFACE	=	178.7	FT
	H2- DISTANCE BETWEEN GROUND SURFACE AND GROUND WATER TABLE	=	12.35	FT

GZA

BORING NO. /TEST NO. MW-62 T2

PACKER TEST LOG

GZA GEOENVIRONMENTAL OF NEW YORK 440 NINTH AVENUE, 18th FLOOR NEW YORK, NEW YORK 10001 SCIENTISTS AND ENGINEERS	Client Entergy Indian Point Energy Cente Buchanan, NY	BORING NO./TEST NO.	MW-62 T3
		SHEET	1 of 1
		FILE NO.	41.0017869.01
		PROJECT LOCATION	Indian Point

CONTRACTOR	Aquifer Drilling & Testing, Inc.	BORING COORDINATES	N 463087.4034	E	604349.9123
FOREMAN	Dave Carter	GROUND SURFACE EL.(FT)	14.69	DATUM	NGVD 29
GZA ENG.	Sara Covelli	FINAL BORING DEPTH (FT)	202	DATE START/END	12/19/06
DIAMETER OF DRILLED BOREHOLE	3.83 INCH	GROUND WATER DEPTH (STATIC WATER LEVEL DEPTH)	12.20 (below grade)		1.87 FT ground to casing
I.D. OF DRILLING RODS	2 INCH				

TESTED INTERVAL FROM / TO (FT)	TIME (HR:MIN)	ELAPSED TIME (Δt MIN)	DEPTH UNDER WATER (FT)	DEPTH TO WATER (FT)	CUMULATIVE RECOVERY (ΔH FT)	RECOVERY RATE (ΔH/Δt)
167.7-177.4	11:37:00	0.0	138.522	31.88	0.00	-
L= 9.7 ft	11:38:00	1.0	140.539	29.86	2.02	2.01700
	11:39:00	2.0	142.513	27.89	3.99	1.99550
	11:40:00	3.0	144.270	26.13	5.75	1.91600
	11:41:00	4.0	145.855	24.55	7.33	1.83325
	11:42:00	5.0	147.253	23.15	8.73	1.74620
	11:43:00	6.0	148.536	21.86	10.01	1.66900
	11:44:00	7.0	149.660	20.74	11.14	1.59114
	11:45:00	8.0	150.669	19.73	12.15	1.51838
	11:46:00	9.0	151.577	18.82	13.06	1.45056
	11:47:00	10.0	152.369	18.03	13.85	1.38470
	11:48:00	11.0	153.104	17.30	14.58	1.32564
	11:49:00	12.0	153.724	16.68	15.20	1.26683
	11:50:00	13.0	154.286	16.11	15.76	1.21262
	11:51:00	14.0	154.791	15.61	16.27	1.16207
	11:52:00	15.0	155.238	15.16	16.72	1.11440
	11:53:00	16.0	155.627	14.77	17.11	1.06906
	11:54:00	17.0	155.973	14.43	17.45	1.02653
	11:55:00	18.0	156.290	14.11	17.77	0.98711
	11:56:00	19.0	156.535	13.87	18.01	0.94805
	11:57:00	20.0	156.794	13.61	18.27	0.91360
	11:58:00	21.0	156.996	13.40	18.47	0.87971

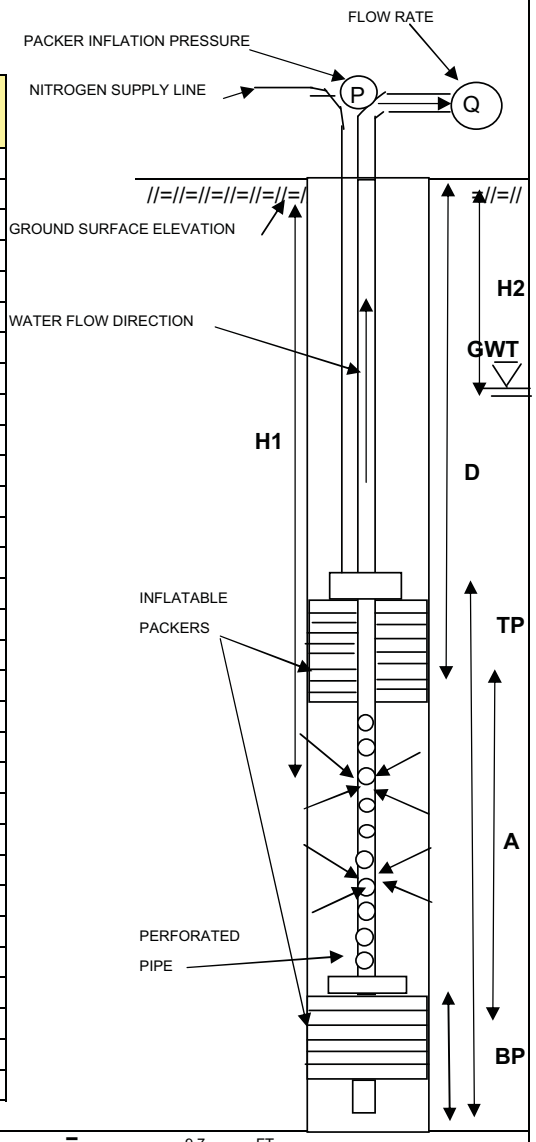

LEGEND:				
	A - TOTAL LENGTH OF TEST SECTION (FT)	=	9.7	FT
	TP - TOTAL LENGTH OF TOP PACKER AND ASSEMBLY	=	15.7	FT
	BP - TOTAL LENGTH OF BOTTOM PACKER AND ASSEMBLY	=	4.65	FT
	D - DISTANCE BETWEEN GROUND SURFACE AND TOP OF THE TEST ZONE	=	167.7	FT
	PIP - PACKER INFLATION PRESSURE (D PSI **+ 50 PSI**)	=	180	PSI
	H1- DISTANCE BETWEEN WATER PRESSURE GAUGE AND GROUND SURFACE	=	170.4	FT
	H2- DISTANCE BETWEEN GROUND SURFACE AND GROUND WATER TABLE	=	12.20	FT

GZA

BORING NO. /TEST NO. MW-62 T3

PACKER TEST LOG

GZA GEOENVIRONMENTAL OF NEW YORK 440 NINTH AVENUE, 18th FLOOR NEW YORK, NEW YORK 10001 SCIENTISTS AND ENGINEERS	Client Entergy Indian Point Energy Cente Buchanan, NY	BORING NO./TEST NO.	MW-62 T4
		SHEET	1 of 1
		FILE NO.	41.0017869.01
		PROJECT LOCATION	Indian Point

CONTRACTOR	Aquifer Drilling & Testing, Inc.	BORING COORDINATES	N 463087.4034	E	604349.9123
FOREMAN	Dave Carter	GROUND SURFACE EL.(FT)	14.69	DATUM	NGVD 29
GZA ENG.	Sara Covelli	FINAL BORING DEPTH (FT)	202	DATE START/END	12/19/06
DIAMETER OF DRILLED BOREHOLE	3.83 INCH	GROUND WATER DEPTH (STATIC WATER LEVEL DEPTH)	12.42 (below grade)		1.87 FT ground to casing
I.D. OF DRILLING RODS	2 INCH				

TESTED INTERVAL FROM / TO (FT)	TIME (HR:MIN)	ELAPSED TIME (Δt MIN)	DEPTH UNDER WATER (FT)	DEPTH TO WATER (FT)	CUMULATIVE RECOVERY (ΔH FT)	RECOVERY RATE (ΔH/Δt)
157.4-167.1'	12:40:00	0.0	128.093	32.01	0.00	-
L= 9.7 ft	12:41:00	1.0	128.453	31.65	0.36	0.36000
	12:42:00	2.0	128.770	31.33	0.68	0.33850
	12:43:00	3.0	129.058	31.04	0.97	0.32167
	12:44:00	4.0	129.360	30.74	1.27	0.31675
	12:45:00	5.0	129.663	30.44	1.57	0.31400
	12:46:00	6.0	129.951	30.15	1.86	0.30967
	12:47:00	7.0	130.225	29.88	2.13	0.30457
	12:48:00	8.0	130.498	29.60	2.41	0.30063
	12:49:00	9.0	130.786	29.31	2.69	0.29922
	12:50:00	10.0	131.031	29.07	2.94	0.29380
	12:51:00	11.0	131.290	28.81	3.20	0.29064
	12:52:00	12.0	131.564	28.54	3.47	0.28925
	12:53:00	13.0	131.794	28.31	3.70	0.28469
	12:54:00	14.0	132.039	28.06	3.95	0.28186
	12:55:00	15.0	132.284	27.82	4.19	0.27940
	12:56:00	16.0	132.515	27.59	4.42	0.27638
	12:57:00	17.0	132.760	27.34	4.67	0.27453
	12:58:00	18.0	132.976	27.12	4.88	0.27128
	12:59:00	19.0	133.220	26.88	5.13	0.26984
	13:00:00	20.0	133.437	26.66	5.34	0.26720
	13:05:00	25.0	134.502	25.60	6.41	0.25636
	13:10:00	30.0	135.468	24.63	7.38	0.24583
	13:15:00	35.0	136.390	23.71	8.30	0.23706
	13:20:00	40.0	137.225	22.88	9.13	0.22830
	13:25:00	45.0	138.003	22.10	9.91	0.22022
	13:30:00	50.0	138.723	21.38	10.63	0.21260
	13:35:00	55.0	139.357	20.74	11.26	0.20480

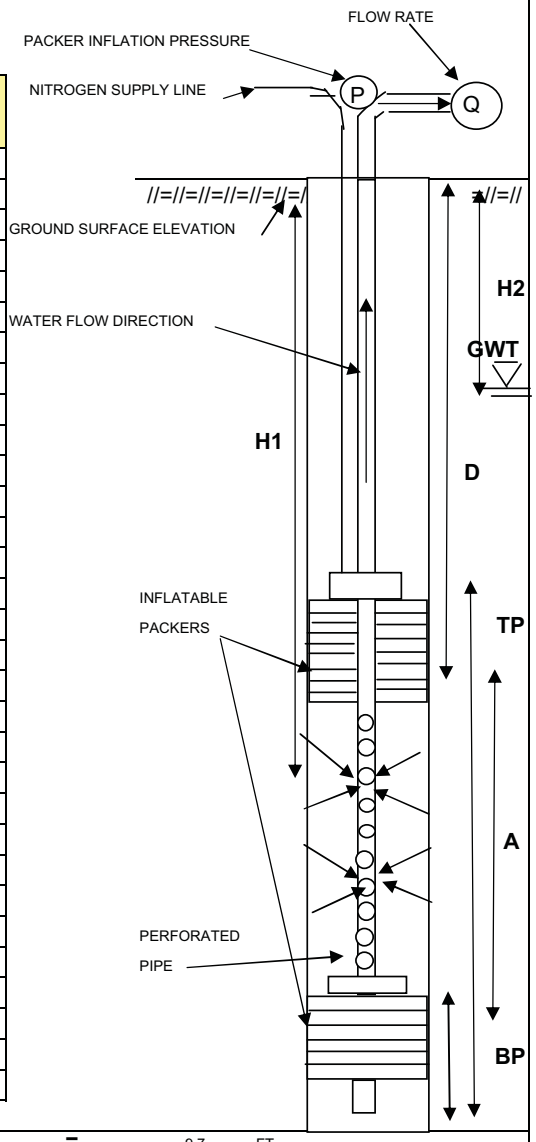

LEGEND:				
	A - TOTAL LENGTH OF TEST SECTION (FT)	=	9.7	FT
	TP - TOTAL LENGTH OF TOP PACKER AND ASSEMBLY	=	15.7	FT
	BP - TOTAL LENGTH OF BOTTOM PACKER AND ASSEMBLY	=	4.65	FT
	D - DISTANCE BETWEEN GROUND SURFACE AND TOP OF THE TEST ZONE	=	157.4	FT
	PIP - PACKER INFLATION PRESSURE (D PSI **+ 50 PSI**)	=	180	PSI
	H1- DISTANCE BETWEEN WATER PRESSURE GAUGE AND GROUND SURFACE	=	160.1	FT
	H2- DISTANCE BETWEEN GROUND SURFACE AND GROUND WATER TABLE	=	12.42	FT

GZA

BORING NO. /TEST NO. MW-62 T4

PACKER TEST LOG

GZA GEOENVIRONMENTAL OF NEW YORK 440 NINTH AVENUE, 18th FLOOR NEW YORK, NEW YORK 10001 SCIENTISTS AND ENGINEERS	Client Entergy Indian Point Energy Cente Buchanan, NY	BORING NO./TEST NO.	MW-62 T5
		SHEET	1 of 1
		FILE NO.	41.0017869.01
		PROJECT LOCATION	Indian Point

CONTRACTOR	Aquifer Drilling & Testing, Inc.	BORING COORDINATES	N 463087.4034	E	604349.9123
FOREMAN	Dave Carter	GROUND SURFACE EL.(FT)	14.69	DATUM	NGVD 29
GZA ENG.	Sara Covelli	FINAL BORING DEPTH (FT)	202	DATE START/END	12/19/06
DIAMETER OF DRILLED BOREHOLE	3.83 INCH	GROUND WATER DEPTH (STATIC WATER LEVEL DEPTH)	12.50 (below grade)		1.87 FT ground to casing
I.D. OF DRILLING RODS	2 INCH				

TESTED INTERVAL FROM / TO (FT)	TIME (HR:MIN)	ELAPSED TIME (Δt MIN)	DEPTH UNDER WATER (FT)	DEPTH TO WATER (FT)	CUMULATIVE RECOVERY (ΔH FT)	RECOVERY RATE (ΔH/Δt)
146.9-156.6'	14:55:00	0.0	118.892	30.71	0.00	-
L= 9.7 ft	14:56:00	1.0	119.453	30.15	0.56	0.56100
	14:57:00	2.0	120.043	29.56	1.15	0.57550
	14:58:00	3.0	120.619	28.98	1.73	0.57567
	14:59:00	4.0	121.181	28.42	2.29	0.57225
	15:00:00	5.0	121.699	27.90	2.81	0.56140
	15:01:00	6.0	122.203	27.40	3.31	0.55183
	15:02:00	7.0	122.722	26.88	3.83	0.54714
	15:03:00	8.0	123.182	26.42	4.29	0.53625
	15:04:00	9.0	123.658	25.94	4.77	0.52956
	15:05:00	10.0	124.104	25.50	5.21	0.52120
	15:06:00	11.0	124.536	25.06	5.64	0.51309
	15:07:00	12.0	124.954	24.65	6.06	0.50517
	15:08:00	13.0	125.342	24.26	6.45	0.49615
	15:09:00	14.0	125.731	23.87	6.84	0.48850
	15:10:00	15.0	126.100	23.50	7.21	0.48053
	15:11:00	16.0	126.480	23.12	7.59	0.47425
	15:12:00	17.0	126.826	22.77	7.93	0.46671
	15:13:00	18.0	127.171	22.43	8.28	0.45994
	15:14:00	19.0	127.488	22.11	8.60	0.45242
	15:15:00	20.0	127.819	21.78	8.93	0.44635
	15:16:00	21.0	128.136	21.46	9.24	0.44019
	15:17:00	22.0	128.424	21.18	9.53	0.43327
	15:18:00	23.0	128.712	20.89	9.82	0.42696
	15:19:00	24.0	129.000	20.60	10.11	0.42117
	15:20:00	25.0	129.260	20.34	10.37	0.41472
	15:21:00	26.0	129.533	20.07	10.64	0.40927
	15:22:00	27.0	129.792	19.81	10.90	0.40370
	15:23:00	28.0	130.023	19.58	11.13	0.39754
	15:24:00	29.0	130.253	19.35	11.36	0.39176
	15:25:00	30.0	130.469	19.13	11.58	0.38590

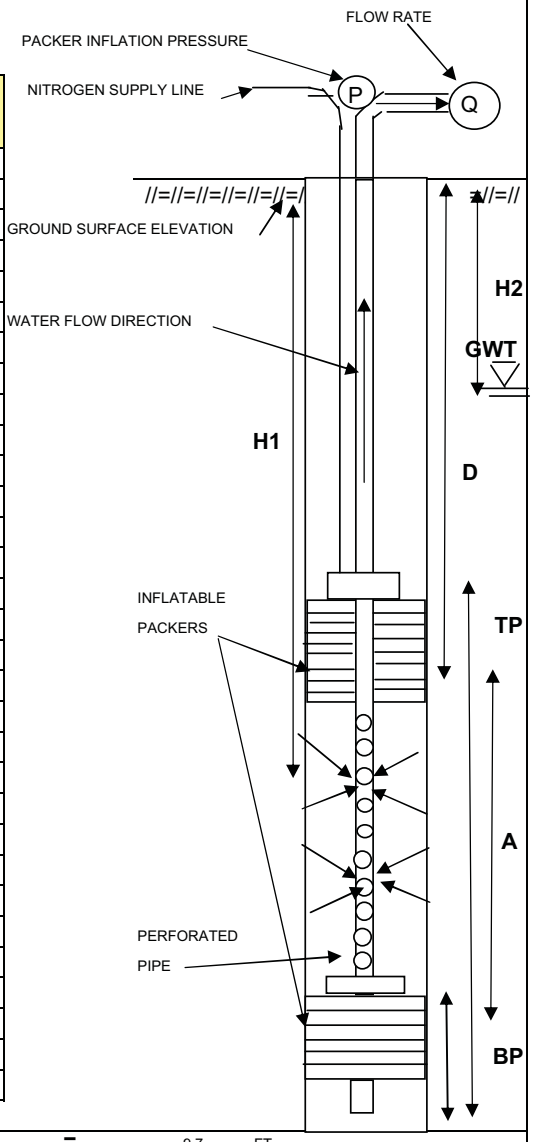

LEGEND:				
	A - TOTAL LENGTH OF TEST SECTION (FT)	=	9.7	FT
	TP - TOTAL LENGTH OF TOP PACKER AND ASSEMBLY	=	15.7	FT
	BP - TOTAL LENGTH OF BOTTOM PACKER AND ASSEMBLY	=	4.65	FT
	D - DISTANCE BETWEEN GROUND SURFACE AND TOP OF THE TEST ZONE	=	146.9	FT
	PIP - PACKER INFLATION PRESSURE (D PSI **+ 50 PSI**)	=	180	PSI
	H1- DISTANCE BETWEEN WATER PRESSURE GAUGE AND GROUND SURFACE	=	149.6	FT
	H2- DISTANCE BETWEEN GROUND SURFACE AND GROUND WATER TABLE	=	12.50	FT

GZA

BORING NO. /TEST NO. MW-62 T5

PACKER TEST LOG

GZA GEOENVIRONMENTAL OF NEW YORK 440 NINTH AVENUE, 18th FLOOR NEW YORK, NEW YORK 10001 SCIENTISTS AND ENGINEERS	Client Entergy Indian Point Energy Cente Buchanan, NY	BORING NO./TEST NO.	MW-62 T6
		SHEET	1 of 1
		FILE NO.	41.0017869.01
		PROJECT LOCATION	Indian Point

CONTRACTOR	Aquifer Drilling & Testing, Inc.	BORING COORDINATES	N 463087.4034	E	604349.9123
FOREMAN	Dave Carter	GROUND SURFACE EL.(FT)	14.69	DATUM	NGVD 29
GZA ENG.	Sara Covelli	FINAL BORING DEPTH (FT)	202	DATE START/END	12/21/06
DIAMETER OF DRILLED BOREHOLE	3.83 INCH	GROUND WATER DEPTH (STATIC WATER LEVEL DEPTH)	13.20 (below grade)		1.87 FT ground to casing
I.D. OF DRILLING RODS	2 INCH				

TESTED INTERVAL FROM / TO (FT)	TIME (HR:MIN)	ELAPSED TIME (Δt MIN)	DEPTH UNDER WATER (FT)	DEPTH TO WATER (FT)	CUMULATIVE RECOVERY (ΔH FT)	RECOVERY RATE (ΔH/Δt)
134.3-144.0'	8:46:00	0.0	103.403	33.60	0.00	-
L= 9.7 ft	8:47:00	1.0	104.886	32.11	1.48	1.48300
	8:48:00	2.0	106.253	30.75	2.85	1.42500
	8:49:00	3.0	107.534	29.47	4.13	1.37700
	8:50:00	4.0	108.714	28.29	5.31	1.32775
	8:51:00	5.0	109.837	27.16	6.43	1.28680
	8:52:00	6.0	110.873	26.13	7.47	1.24500
	8:53:00	7.0	111.837	25.16	8.43	1.20486
	8:54:00	8.0	112.744	24.26	9.34	1.16763
	8:55:00	9.0	113.579	23.42	10.18	1.13067
	8:56:00	10.0	114.385	22.62	10.98	1.09820
	8:57:00	11.0	115.134	21.87	11.73	1.06645
	8:58:00	12.0	115.811	21.19	12.41	1.03400
	8:59:00	13.0	116.473	20.53	13.07	1.00538
	9:00:00	14.0	117.049	19.95	13.65	0.97471
	9:01:00	15.0	117.625	19.38	14.22	0.94813
	9:02:00	16.0	118.128	18.87	14.73	0.92031
	9:03:00	17.0	118.560	18.44	15.16	0.89159
	9:04:00	18.0	119.093	17.91	15.69	0.87167
	9:05:00	19.0	119.511	17.49	16.11	0.84779
	9:06:00	20.0	119.899	17.10	16.50	0.82480
	9:07:00	21.0	120.259	16.74	16.86	0.80267
	9:08:00	22.0	120.605	16.40	17.20	0.78191
	9:09:00	23.0	120.907	16.09	17.50	0.76104
	9:10:00	24.0	121.210	15.79	17.81	0.74196
	9:11:00	25.0	121.483	15.52	18.08	0.72320
	9:16:00	30.0	122.520	14.48	19.12	0.63723
	9:21:00	35.0	123.226	13.77	19.82	0.56637

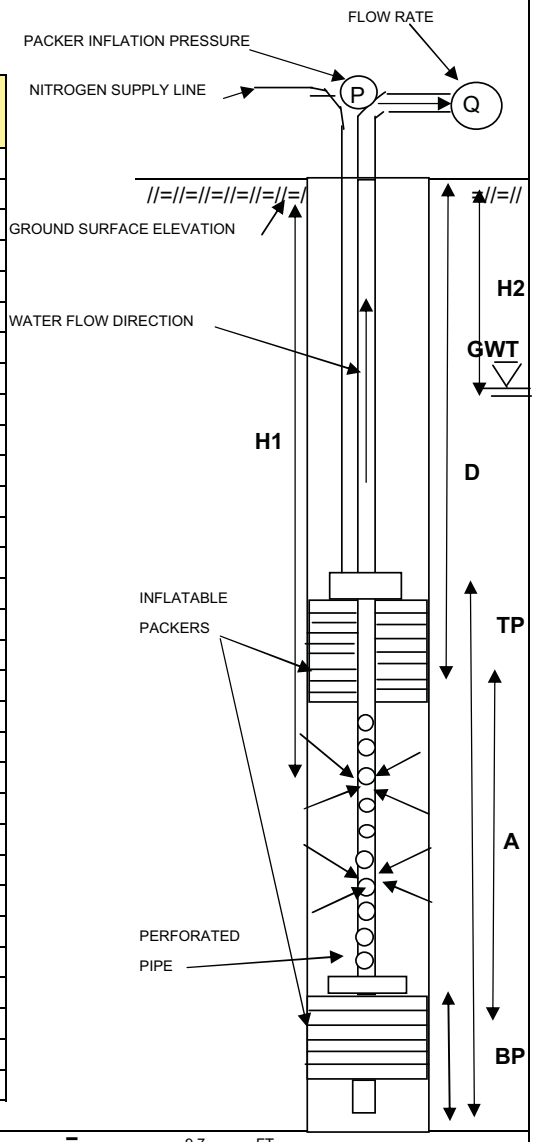

LEGEND:				
	A - TOTAL LENGTH OF TEST SECTION (FT)	=	9.7	FT
	TP - TOTAL LENGTH OF TOP PACKER AND ASSEMBLY	=	15.7	FT
	BP - TOTAL LENGTH OF BOTTOM PACKER AND ASSEMBLY	=	4.65	FT
	D - DISTANCE BETWEEN GROUND SURFACE AND TOP OF THE TEST ZONE	=	134.3	FT
	PIP - PACKER INFLATION PRESSURE (D PSI **+ 50 PSI**)	=	180	PSI
	H1- DISTANCE BETWEEN WATER PRESSURE GAUGE AND GROUND SURFACE	=	137.0	FT
	H2- DISTANCE BETWEEN GROUND SURFACE AND GROUND WATER TABLE	=	13.20	FT

GZA

BORING NO. /TEST NO. MW-62 T6

PACKER TEST LOG

GZA GEOENVIRONMENTAL OF NEW YORK 440 NINTH AVENUE, 18th FLOOR NEW YORK, NEW YORK 10001 SCIENTISTS AND ENGINEERS	Client Entergy Indian Point Energy Cente Buchanan, NY	BORING NO./TEST NO.	MW-62 T7
		SHEET	1 of 1
		FILE NO.	41.0017869.01
		PROJECT LOCATION	Indian Point

CONTRACTOR	Aquifer Drilling & Testing, Inc.	BORING COORDINATES	N 463087.4034	E	604349.9123
FOREMAN	Dave Carter	GROUND SURFACE EL.(FT)	14.69	DATUM	NGVD 29
GZA ENG.	Sara Covelli	FINAL BORING DEPTH (FT)	202	DATE START/END	12/21/06
DIAMETER OF DRILLED BOREHOLE	3.83 INCH	GROUND WATER DEPTH (STATIC WATER LEVEL DEPTH)	13.35	(below grade)	1.87 FT ground to casing
I.D. OF DRILLING RODS	2 INCH				

TESTED INTERVAL FROM / TO (FT)	TIME (HR:MIN)	ELAPSED TIME (Δt MIN)	DEPTH UNDER WATER (FT)	DEPTH TO WATER (FT)	CUMULATIVE RECOVERY (ΔH FT)	RECOVERY RATE (ΔH/Δt)
116.3-126.0'	10:15:00	0.0	84.226	34.97	0.00	-
L= 9.7 ft	10:16:00	1.0	85.780	33.42	1.55	1.55400
	10:17:00	2.0	87.204	32.00	2.98	1.48900
	10:18:00	3.0	88.570	30.63	4.34	1.44800
	10:19:00	4.0	89.821	29.38	5.60	1.39875
	10:20:00	5.0	91.001	28.20	6.78	1.35500
	10:21:00	6.0	92.094	27.11	7.87	1.31133
	10:22:00	7.0	93.130	26.07	8.90	1.27200
	10:23:00	8.0	94.094	25.11	9.87	1.23350
	10:24:00	9.0	94.972	24.23	10.75	1.19400
	10:25:00	10.0	95.820	23.38	11.59	1.15940
	10:26:00	11.0	96.597	22.60	12.37	1.12464
	10:27:00	12.0	97.317	21.88	13.09	1.09092
	10:28:00	13.0	97.979	21.22	13.75	1.05792
	10:29:00	14.0	98.482	20.72	14.26	1.01829
	10:30:00	15.0	99.144	20.06	14.92	0.99453
	10:31:00	16.0	99.691	19.51	15.47	0.96656
	10:32:00	17.0	100.194	19.01	15.97	0.93929
	10:33:00	18.0	100.655	18.55	16.43	0.91272
	10:34:00	19.0	101.072	18.13	16.85	0.88663
	10:35:00	20.0	101.489	17.71	17.26	0.86315
	10:36:00	21.0	101.849	17.35	17.62	0.83919
	10:37:00	22.0	102.195	17.01	17.97	0.81677
	10:38:00	23.0	102.540	16.66	18.31	0.79626
	10:39:00	24.0	102.813	16.39	18.59	0.77446
	10:40:00	25.0	103.101	16.10	18.88	0.75500
	10:41:00	26.0	103.360	15.84	19.13	0.73592
	10:42:00	27.0	103.590	15.61	19.36	0.71719
	10:43:00	28.0	103.821	15.38	19.60	0.69982
	10:44:00	29.0	104.037	15.16	19.81	0.68314
	10:45:00	30.0	104.224	14.98	20.00	0.66660

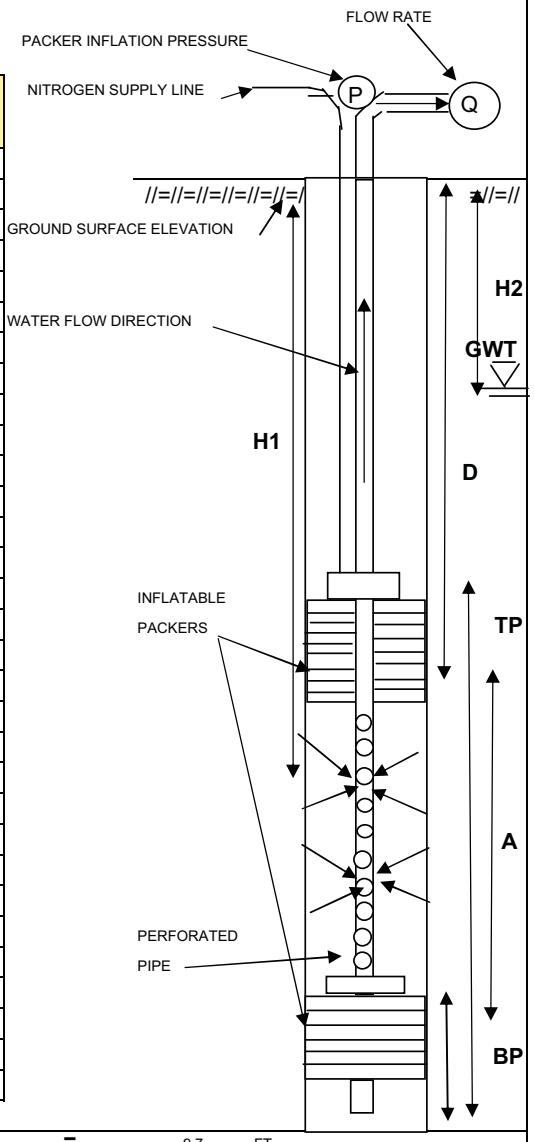

LEGEND:				
	A - TOTAL LENGTH OF TEST SECTION (FT)	=	9.7	FT
	TP - TOTAL LENGTH OF TOP PACKER AND ASSEMBLY	=	15.7	FT
	BP - TOTAL LENGTH OF BOTTOM PACKER AND ASSEMBLY	=	4.65	FT
	D - DISTANCE BETWEEN GROUND SURFACE AND TOP OF THE TEST ZONE	=	116.3	FT
	PIP - PACKER INFLATION PRESSURE (D PSI **+ 50 PSI**)	=	180	PSI
	H1- DISTANCE BETWEEN WATER PRESSURE GAUGE AND GROUND SURFACE	=	119.2	FT
	H2- DISTANCE BETWEEN GROUND SURFACE AND GROUND WATER TABLE	=	13.35	FT

GZA

BORING NO. /TEST NO. MW-62 T7

PACKER TEST LOG

GZA GEOENVIRONMENTAL OF NEW YORK 440 NINTH AVENUE, 18th FLOOR NEW YORK, NEW YORK 10001 SCIENTISTS AND ENGINEERS	Client Entergy Indian Point Energy Cente Buchanan, NY	BORING NO./TEST NO.	MW-62 T8
		SHEET	1 of 1
		FILE NO.	41.0017869.01
		PROJECT LOCATION	Indian Point

CONTRACTOR	Aquifer Drilling & Testing, Inc.	BORING COORDINATES	N 463087.4034	E	604349.9123
FOREMAN	Dave Carter	GROUND SURFACE EL.(FT)	14.69	DATUM	NGVD 29
GZA ENG.	Sara Covelli	FINAL BORING DEPTH (FT)	202	DATE START/END	12/21/06
DIAMETER OF DRILLED BOREHOLE	3.83 INCH	GROUND WATER DEPTH (STATIC WATER LEVEL DEPTH)	13.26	(below grade)	1.87 FT ground to casing
I.D. OF DRILLING RODS	2 INCH				

TESTED INTERVAL FROM / TO (FT)	TIME (HR:MIN)	ELAPSED TIME (Δt MIN)	DEPTH UNDER WATER (FT)	DEPTH TO WATER (FT)	CUMULATIVE RECOVERY (ΔH FT)	RECOVERY RATE (ΔH/Δt)
106.6-116.3'	11:24:00	0.0	74.980	34.52	0.00	-
L= 9.7 ft	11:25:00	1.0	75.598	33.90	0.62	0.61800
	11:26:00	2.0	76.145	33.36	1.16	0.58250
	11:27:00	3.0	76.677	32.82	1.70	0.56567
	11:28:00	4.0	77.223	32.28	2.24	0.56075
	11:29:00	5.0	77.726	31.77	2.75	0.54920
	11:30:00	6.0	78.230	31.27	3.25	0.54167
	11:31:00	7.0	78.733	30.77	3.75	0.53614
	11:32:00	8.0	79.207	30.29	4.23	0.52837
	11:33:00	9.0	79.668	29.83	4.69	0.52089
	11:34:00	10.0	80.113	29.39	5.13	0.51330
	11:35:00	11.0	80.559	28.94	5.58	0.50718
	11:36:00	12.0	80.991	28.51	6.01	0.50092
	11:37:00	13.0	81.422	28.08	6.44	0.49554
	11:38:00	14.0	81.825	27.68	6.85	0.48893
	11:39:00	15.0	82.227	27.27	7.25	0.48313
	11:40:00	16.0	82.616	26.88	7.64	0.47725
	11:41:00	17.0	82.989	26.51	8.01	0.47112
	11:42:00	18.0	83.378	26.12	8.40	0.46656
	11:43:00	19.0	83.737	25.76	8.76	0.46089
	11:44:00	20.0	84.083	25.42	9.10	0.45515
	11:45:00	21.0	84.428	25.07	9.45	0.44990
	11:46:00	22.0	84.758	24.74	9.78	0.44445
	11:47:00	23.0	85.089	24.41	10.11	0.43952
	11:48:00	24.0	85.420	24.08	10.44	0.43500
	11:49:00	25.0	85.722	23.78	10.74	0.42968
	11:50:00	26.0	86.082	23.42	11.10	0.42700
	11:55:00	31.0	87.434	22.07	12.45	0.40174
	12:00:00	36.0	88.699	20.80	13.72	0.38108

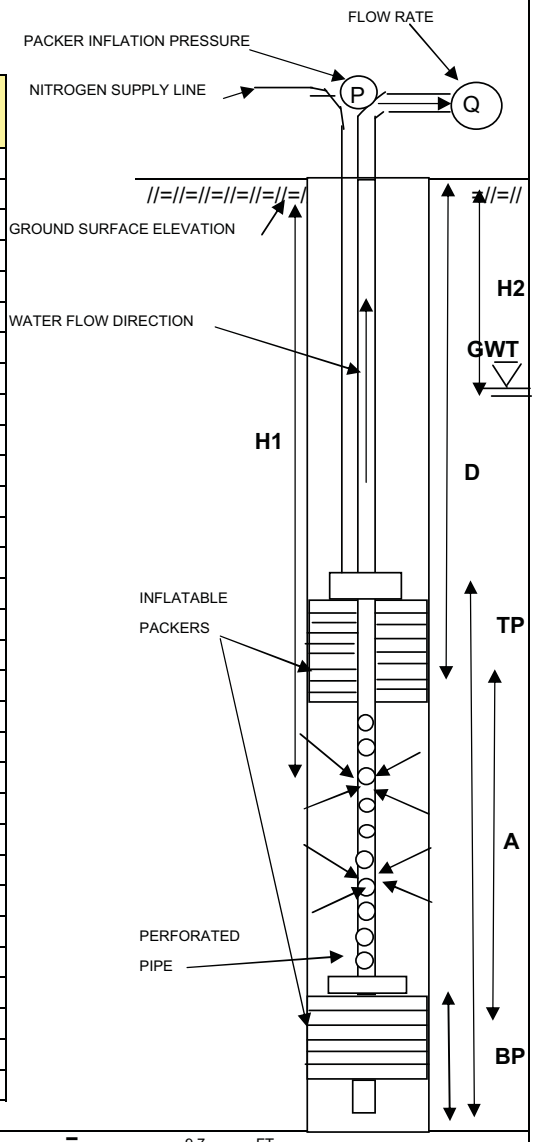

LEGEND:				
	A - TOTAL LENGTH OF TEST SECTION (FT)	=	9.7	FT
	TP - TOTAL LENGTH OF TOP PACKER AND ASSEMBLY	=	15.7	FT
	BP - TOTAL LENGTH OF BOTTOM PACKER AND ASSEMBLY	=	4.65	FT
	D - DISTANCE BETWEEN GROUND SURFACE AND TOP OF THE TEST ZONE	=	106.6	FT
	PIP - PACKER INFLATION PRESSURE (D PSI **+ 50 PSI**)	=	180	PSI
	H1- DISTANCE BETWEEN WATER PRESSURE GAUGE AND GROUND SURFACE	=	109.5	FT
	H2- DISTANCE BETWEEN GROUND SURFACE AND GROUND WATER TABLE	=	13.26	FT

GZA

BORING NO. /TEST NO. MW-62 T8

PACKER TEST LOG

GZA GEOENVIRONMENTAL OF NEW YORK 440 NINTH AVENUE, 18th FLOOR NEW YORK, NEW YORK 10001 SCIENTISTS AND ENGINEERS	Client Entergy Indian Point Energy Cente Buchanan, NY	BORING NO./TEST NO.	MW-62 T9
		SHEET	1 of 1
		FILE NO.	41.0017869.01
		PROJECT LOCATION	Indian Point

CONTRACTOR	Aquifer Drilling & Testing, Inc.	BORING COORDINATES	N 463087.4034	E	604349.9123
FOREMAN	Dave Carter	GROUND SURFACE EL.(FT)	14.69	DATUM	NGVD 29
GZA ENG.	Sara Covelli	FINAL BORING DEPTH (FT)	202	DATE START/END	12/21/06
DIAMETER OF DRILLED BOREHOLE	3.83 INCH	GROUND WATER DEPTH (STATIC WATER LEVEL DEPTH)	13.04	(below grade)	1.87 FT ground to casing
I.D. OF DRILLING RODS	2 INCH				

TESTED INTERVAL FROM / TO (FT)	TIME (HR:MIN)	ELAPSED TIME (Δt MIN)	DEPTH UNDER WATER (FT)	DEPTH TO WATER (FT)	CUMULATIVE RECOVERY (ΔH FT)	RECOVERY RATE (ΔH/Δt)
96.9-106.6'	12:47:00	0.0	64.270	35.53	0.00	-
L= 9.7 ft	12:48:00	1.0	64.788	35.01	0.52	0.51800
	12:49:00	2.0	65.262	34.54	0.99	0.49600
	12:50:00	3.0	65.837	33.96	1.57	0.52233
	12:51:00	4.0	66.311	33.49	2.04	0.51025
	12:52:00	5.0	66.671	33.13	2.40	0.48020
	12:53:00	6.0	67.116	32.68	2.85	0.47433
	12:54:00	7.0	67.548	32.25	3.28	0.46829
	12:55:00	8.0	67.979	31.82	3.71	0.46363
	12:56:00	9.0	68.381	31.42	4.11	0.45678
	12:57:00	10.0	68.769	31.03	4.50	0.44990
	12:58:00	11.0	69.186	30.61	4.92	0.44691
	12:59:00	12.0	69.574	30.23	5.30	0.44200
	13:00:00	13.0	69.963	29.84	5.69	0.43792
	13:01:00	14.0	70.308	29.49	6.04	0.43129
	13:02:00	15.0	70.681	29.12	6.41	0.42740
	13:03:00	16.0	71.041	28.76	6.77	0.42319
	13:04:00	17.0	71.386	28.41	7.12	0.41859
	13:05:00	18.0	71.716	28.08	7.45	0.41367
	13:06:00	19.0	72.061	27.74	7.79	0.41005
	13:07:00	20.0	72.378	27.42	8.11	0.40540
	13:08:00	21.0	72.708	27.09	8.44	0.40181
	13:09:00	22.0	72.996	26.80	8.73	0.39664
	13:10:00	23.0	73.312	26.49	9.04	0.39313
	13:11:00	24.0	73.629	26.17	9.36	0.38996
	13:12:00	25.0	73.930	25.87	9.66	0.38640
	13:13:00	26.0	74.204	25.60	9.93	0.38208
	13:14:00	27.0	74.491	25.31	10.22	0.37856
	13:15:00	28.0	74.764	25.04	10.49	0.37479
	13:16:00	29.0	75.052	24.75	10.78	0.37179
	13:17:00	30.0	75.296	24.50	11.03	0.36753

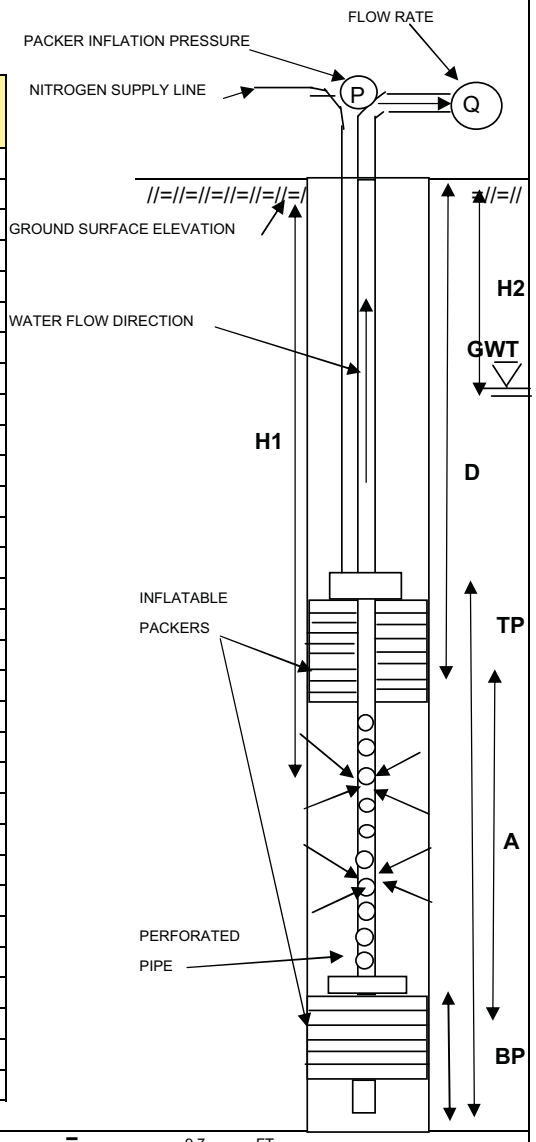

LEGEND:				
	A - TOTAL LENGTH OF TEST SECTION (FT)	=	9.7	FT
	TP - TOTAL LENGTH OF TOP PACKER AND ASSEMBLY	=	15.7	FT
	BP - TOTAL LENGTH OF BOTTOM PACKER AND ASSEMBLY	=	4.65	FT
	D - DISTANCE BETWEEN GROUND SURFACE AND TOP OF THE TEST ZONE	=	96.9	FT
	PIP - PACKER INFLATION PRESSURE (D PSI **+ 50 PSI**)	=	180	PSI
	H1- DISTANCE BETWEEN WATER PRESSURE GAUGE AND GROUND SURFACE	=	99.8	FT
	H2- DISTANCE BETWEEN GROUND SURFACE AND GROUND WATER TABLE	=	13.04	FT

GZA

BORING NO. /TEST NO. MW-62 T9

PACKER TEST LOG

GZA GEOENVIRONMENTAL OF NEW YORK 440 NINTH AVENUE, 18th FLOOR NEW YORK, NEW YORK 10001 SCIENTISTS AND ENGINEERS	Client Entergy Indian Point Energy Cente Buchanan, NY	BORING NO./TEST NO.	MW-62 T10
		SHEET	1 of 1
		FILE NO.	41.0017869.01
		PROJECT LOCATION	Indian Point

CONTRACTOR	Aquifer Drilling & Testing, Inc.	BORING COORDINATES	N 463087.4034	E	604349.9123
FOREMAN	Dave Carter	GROUND SURFACE EL.(FT)	14.69	DATUM	NGVD 29
GZA ENG.	Sara Covelli	FINAL BORING DEPTH (FT)	202	DATE START/END	12/21/06
DIAMETER OF DRILLED BOREHOLE	3.83 INCH	GROUND WATER DEPTH (STATIC WATER LEVEL DEPTH)	13.10 (below grade)		1.87 FT ground to casing
I.D. OF DRILLING RODS	2 INCH				

TESTED INTERVAL FROM / TO (FT)	TIME (HR:MIN)	ELAPSED TIME (Δt MIN)	DEPTH UNDER WATER (FT)	DEPTH TO WATER (FT)	CUMULATIVE RECOVERY (ΔH FT)	RECOVERY RATE (ΔH/Δt)
80.3-90.0'	14:08:00	0.0	48.852	34.39	0.00	-
L= 9.7 ft	14:09:00	1.0	49.254	33.99	0.40	0.40200
	14:10:00	2.0	49.628	33.62	0.78	0.38800
	14:11:00	3.0	50.001	33.24	1.15	0.38300
	14:12:00	4.0	50.360	32.88	1.51	0.37700
	14:13:00	5.0	50.705	32.54	1.85	0.37060
	14:14:00	6.0	51.050	32.19	2.20	0.36633
	14:15:00	7.0	51.366	31.88	2.51	0.35914
	14:16:00	8.0	51.682	31.56	2.83	0.35375
	14:17:00	9.0	52.013	31.23	3.16	0.35122
	14:18:00	10.0	52.329	30.92	3.48	0.34770
	14:19:00	11.0	52.645	30.60	3.79	0.34482
	14:20:00	12.0	52.946	30.30	4.09	0.34117
	14:21:00	13.0	53.248	30.00	4.40	0.33815
	14:22:00	14.0	53.550	29.69	4.70	0.33557
	14:23:00	15.0	53.837	29.41	4.99	0.33233
	14:24:00	16.0	54.110	29.13	5.26	0.32863
	14:25:00	17.0	54.398	28.85	5.55	0.32624
	14:26:00	18.0	54.671	28.57	5.82	0.32328
	14:27:00	19.0	54.958	28.29	6.11	0.32137
	14:28:00	20.0	55.217	28.03	6.37	0.31825
	14:29:00	21.0	55.490	27.75	6.64	0.31610
	14:30:00	22.0	55.748	27.50	6.90	0.31345
	14:31:00	23.0	56.007	27.24	7.16	0.31109
	14:32:00	24.0	56.266	26.98	7.41	0.30892
	14:33:00	25.0	56.524	26.72	7.67	0.30688
	14:34:00	26.0	56.754	26.49	7.90	0.30392
	14:35:00	27.0	56.998	26.25	8.15	0.30170
	14:36:00	28.0	57.228	26.02	8.38	0.29914
	14:37:00	29.0	57.473	25.77	8.62	0.29728
	14:38:00	30.0	57.703	25.54	8.85	0.29503

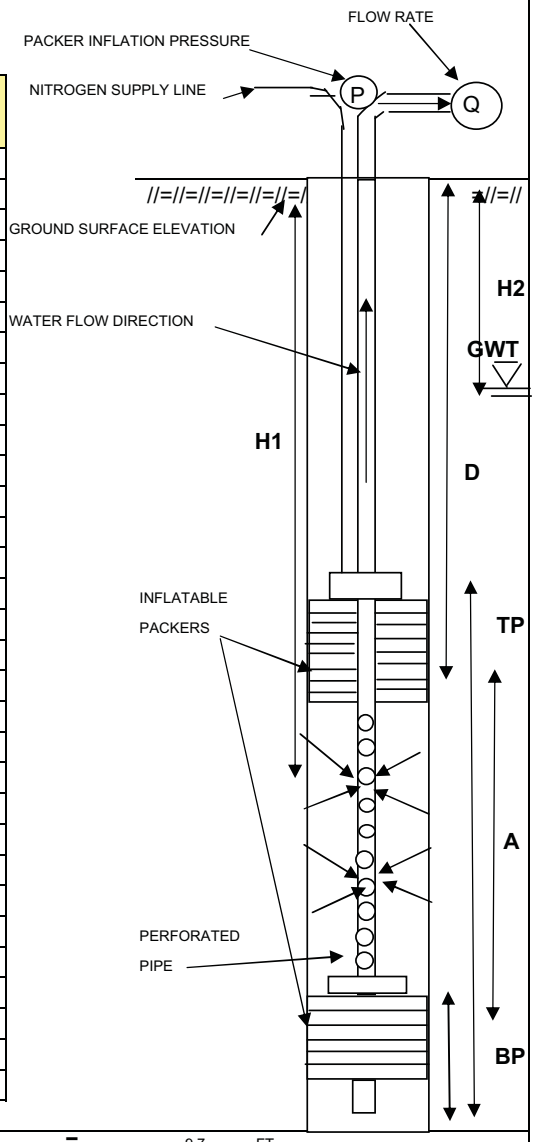

LEGEND:				
	A - TOTAL LENGTH OF TEST SECTION (FT)	=	9.7	FT
	TP - TOTAL LENGTH OF TOP PACKER AND ASSEMBLY	=	15.7	FT
	BP - TOTAL LENGTH OF BOTTOM PACKER AND ASSEMBLY	=	4.65	FT
	D - DISTANCE BETWEEN GROUND SURFACE AND TOP OF THE TEST ZONE	=	80.3	FT
	PIP - PACKER INFLATION PRESSURE (D PSI **+ 50 PSI**)	=	180	PSI
	H1- DISTANCE BETWEEN WATER PRESSURE GAUGE AND GROUND SURFACE	=	83.2	FT
	H2- DISTANCE BETWEEN GROUND SURFACE AND GROUND WATER TABLE	=	13.10	FT

GZA

BORING NO. /TEST NO. MW-62 T10

PACKER TEST LOG

GZA GEOENVIRONMENTAL OF NEW YORK 440 NINTH AVENUE, 18th FLOOR NEW YORK, NEW YORK 10001 SCIENTISTS AND ENGINEERS	Client Entergy Indian Point Energy Cente Buchanan, NY	BORING NO./TEST NO.	MW-62 T11
		SHEET	1 of 1
		FILE NO.	41.0017869.01
		PROJECT LOCATION	Indian Point

CONTRACTOR	Aquifer Drilling & Testing, Inc.	BORING COORDINATES	N 463087.4034	E	604349.9123
FOREMAN	Dave Carter	GROUND SURFACE EL.(FT)	14.69	DATUM	NGVD 29
GZA ENG.	Sara Covelli	FINAL BORING DEPTH (FT)	202	DATE START/END	12/22/06
DIAMETER OF DRILLED BOREHOLE	3.83 INCH	GROUND WATER DEPTH (STATIC WATER LEVEL DEPTH)	13.72	(below grade)	1.87 FT ground to casing
I.D. OF DRILLING RODS	2 INCH				

TESTED INTERVAL FROM / TO (FT)	TIME (HR:MIN)	ELAPSED TIME (Δt MIN)	DEPTH UNDER WATER (FT)	DEPTH TO WATER (FT)	CUMULATIVE RECOVERY (ΔH FT)	RECOVERY RATE (ΔH/Δt)
62.0-71.7'	8:56:00	0.0	29.923	53.32	0.00	-
L= 9.7 ft	8:57:00	1.0	30.096	53.15	0.17	0.17300
	8:58:00	2.0	30.239	53.01	0.32	0.15800
	8:59:00	3.0	30.411	52.83	0.49	0.16267
	9:00:00	4.0	30.555	52.69	0.63	0.15800
	9:01:00	5.0	30.699	52.55	0.78	0.15520
	9:02:00	6.0	30.856	52.39	0.93	0.15550
	9:03:00	7.0	31.000	52.24	1.08	0.15386
	9:04:00	8.0	31.158	52.09	1.24	0.15438
	9:05:00	9.0	31.287	51.96	1.36	0.15156
	9:06:00	10.0	31.431	51.81	1.51	0.15080
	9:07:00	11.0	31.574	51.67	1.65	0.15009
	9:08:00	12.0	31.718	51.53	1.80	0.14958
	9:09:00	13.0	31.862	51.38	1.94	0.14915
	9:10:00	14.0	32.005	51.24	2.08	0.14871
	9:11:00	15.0	32.134	51.11	2.21	0.14740
	9:12:00	16.0	32.278	50.97	2.36	0.14719
	9:13:00	17.0	32.422	50.82	2.50	0.14700
	9:14:00	18.0	32.551	50.69	2.63	0.14600
	9:15:00	19.0	32.694	50.55	2.77	0.14584
	9:16:00	20.0	32.824	50.42	2.90	0.14505
	9:17:00	21.0	32.953	50.29	3.03	0.14429
	9:18:00	22.0	33.082	50.16	3.16	0.14359
	9:19:00	23.0	33.211	50.03	3.29	0.14296
	9:20:00	24.0	33.340	49.90	3.42	0.14238
	9:21:00	25.0	33.484	49.76	3.56	0.14244
	9:22:00	26.0	33.599	49.65	3.68	0.14138
	9:23:00	27.0	33.728	49.52	3.81	0.14093
	9:24:00	28.0	33.857	49.39	3.93	0.14050
	9:25:00	29.0	33.987	49.26	4.06	0.14014
	9:30:00	34.0	34.604	48.64	4.68	0.13768

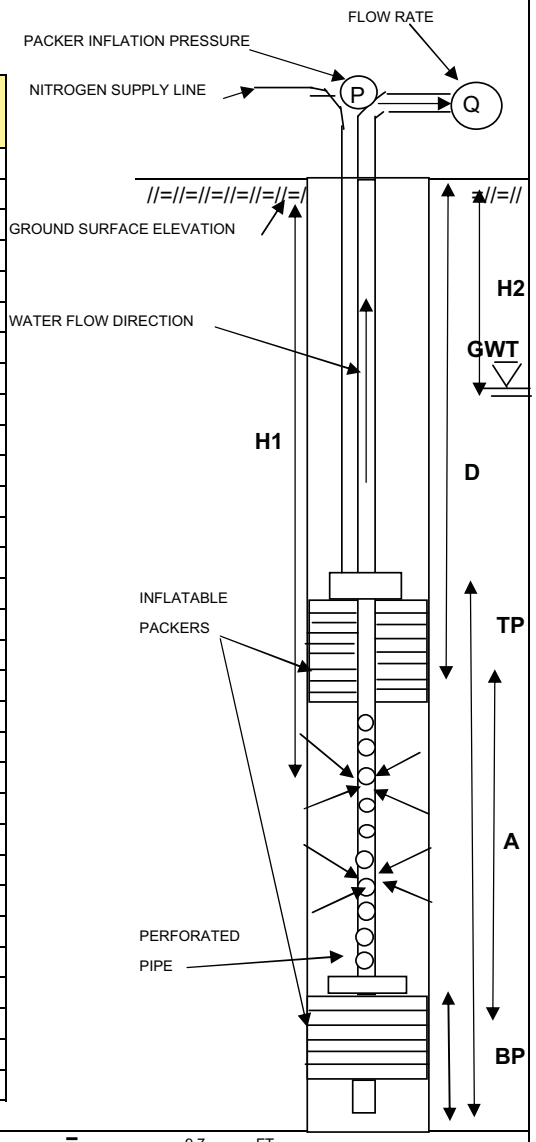

LEGEND:				
	A - TOTAL LENGTH OF TEST SECTION (FT)	=	9.7	FT
	TP - TOTAL LENGTH OF TOP PACKER AND ASSEMBLY	=	15.7	FT
	BP - TOTAL LENGTH OF BOTTOM PACKER AND ASSEMBLY	=	4.65	FT
	D - DISTANCE BETWEEN GROUND SURFACE AND TOP OF THE TEST ZONE	=	62.0	FT
	PIP - PACKER INFLATION PRESSURE (D PSI **+ 50 PSI**)	=	180	PSI
	H1- DISTANCE BETWEEN WATER PRESSURE GAUGE AND GROUND SURFACE	=	83.2	FT
	H2- DISTANCE BETWEEN GROUND SURFACE AND GROUND WATER TABLE	=	13.72	FT

GZA

BORING NO. /TEST NO. MW-62 T11

PACKER TEST LOG

GZA GEOENVIRONMENTAL OF NEW YORK 440 NINTH AVENUE, 18th FLOOR NEW YORK, NEW YORK 10001 SCIENTISTS AND ENGINEERS	Client Entergy Indian Point Energy Cente Buchanan, NY	BORING NO./TEST NO.	MW-62 T12
		SHEET	1 of 1
		FILE NO.	41.0017869.01
		PROJECT LOCATION	Indian Point

CONTRACTOR	Aquifer Drilling & Testing, Inc.	BORING COORDINATES	N 463087.4034	E	604349.9123
FOREMAN	Dave Carter	GROUND SURFACE EL.(FT)	14.69	DATUM	NGVD 29
GZA ENG.	Sara Covelli	FINAL BORING DEPTH (FT)	202	DATE START/END	12/22/06
DIAMETER OF DRILLED BOREHOLE	3.83 INCH	GROUND WATER DEPTH (STATIC WATER LEVEL DEPTH)	15.08 (below grade)		1.87 FT ground to casing
I.D. OF DRILLING RODS	2 INCH				

TESTED INTERVAL FROM / TO (FT)	TIME (HR:MIN)	ELAPSED TIME (Δt MIN)	DEPTH UNDER WATER (FT)	DEPTH TO WATER (FT)	CUMULATIVE RECOVERY (ΔH FT)	RECOVERY RATE (ΔH/Δt)
51.3-61.0'	10:05:00	0.0	17.765	36.73	0.00	-
L= 9.7 ft	10:06:00	1.0	17.851	36.64	0.09	0.08600
	10:07:00	2.0	17.923	36.57	0.16	0.07900
	10:08:00	3.0	17.995	36.50	0.23	0.07667
	10:09:00	4.0	18.081	36.41	0.32	0.07900
	10:10:00	5.0	18.181	36.31	0.42	0.08320
	10:11:00	6.0	18.253	36.24	0.49	0.08133
	10:12:00	7.0	18.325	36.17	0.56	0.08000
	10:13:00	8.0	18.396	36.10	0.63	0.07888
	10:14:00	9.0	18.468	36.03	0.70	0.07811
	10:15:00	10.0	18.554	35.94	0.79	0.07890
	10:16:00	11.0	18.626	35.87	0.86	0.07827
	10:17:00	12.0	18.698	35.80	0.93	0.07775
	10:18:00	13.0	18.770	35.72	1.01	0.07731
	10:19:00	14.0	18.841	35.65	1.08	0.07686
	10:20:00	15.0	18.927	35.57	1.16	0.07747
	10:21:00	16.0	19.014	35.48	1.25	0.07806
	10:22:00	17.0	19.071	35.42	1.31	0.07682
	10:23:00	18.0	19.157	35.34	1.39	0.07733
	10:24:00	19.0	19.214	35.28	1.45	0.07626
	10:25:00	20.0	19.301	35.19	1.54	0.07680
	10:26:00	21.0	19.372	35.12	1.61	0.07652
	10:27:00	22.0	19.444	35.05	1.68	0.07632
	10:28:00	23.0	19.516	34.98	1.75	0.07613
	10:29:00	24.0	19.602	34.89	1.84	0.07654
	10:30:00	25.0	19.659	34.83	1.89	0.07576
	10:31:00	26.0	19.731	34.76	1.97	0.07562
	10:32:00	27.0	19.803	34.69	2.04	0.07548
	10:33:00	28.0	19.875	34.62	2.11	0.07536
	10:34:00	29.0	19.946	34.55	2.18	0.07521
	10:35:00	30.0	20.018	34.48	2.25	0.07510

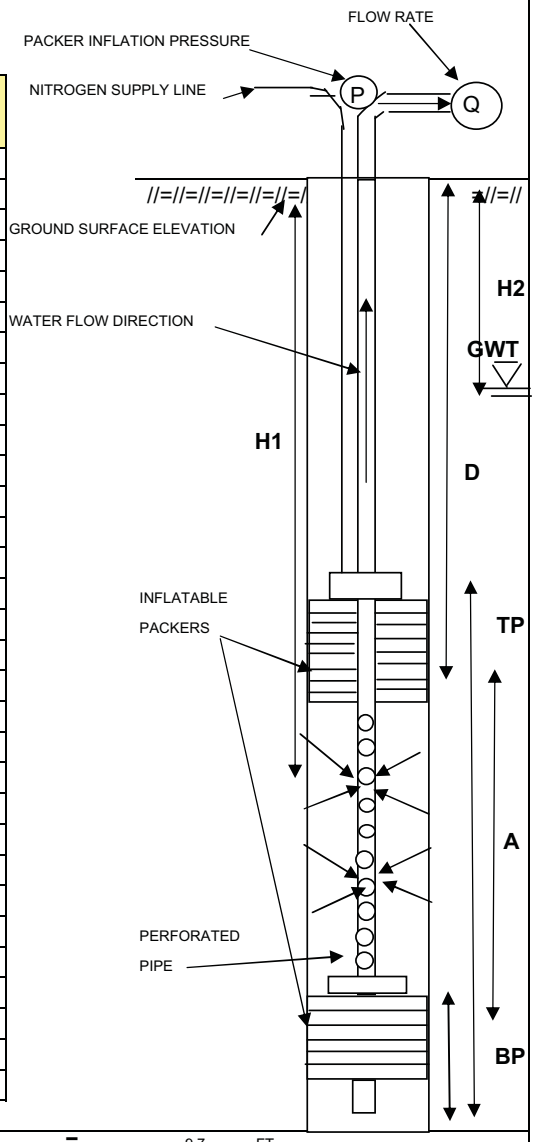

LEGEND:				
	A - TOTAL LENGTH OF TEST SECTION (FT)	=	9.7	FT
	TP - TOTAL LENGTH OF TOP PACKER AND ASSEMBLY	=	15.7	FT
	BP - TOTAL LENGTH OF BOTTOM PACKER AND ASSEMBLY	=	4.65	FT
	D - DISTANCE BETWEEN GROUND SURFACE AND TOP OF THE TEST ZONE	=	51.3	FT
	PIP - PACKER INFLATION PRESSURE (D PSI **+ 50 PSI**)	=	180	PSI
	H1- DISTANCE BETWEEN WATER PRESSURE GAUGE AND GROUND SURFACE	=	54.5	FT
	H2- DISTANCE BETWEEN GROUND SURFACE AND GROUND WATER TABLE	=	15.08	FT

GZA

BORING NO. /TEST NO. MW-62 T12

PACKER TEST LOG

GZA GEOENVIRONMENTAL OF NEW YORK 440 NINTH AVENUE, 18th FLOOR NEW YORK, NEW YORK 10001 SCIENTISTS AND ENGINEERS	Client Entergy Indian Point Energy Cente Buchanan, NY	BORING NO./TEST NO.	MW-62 T13
		SHEET	1 of 1
		FILE NO.	41.0017869.01
		PROJECT LOCATION	Indian Point

CONTRACTOR	Aquifer Drilling & Testing, Inc.	BORING COORDINATES	N 463087.4034	E	604349.9123
FOREMAN	Dave Carter	GROUND SURFACE EL.(FT)	14.69	DATUM	NGVD 29
GZA ENG.	Sara Covelli	FINAL BORING DEPTH (FT)	202	DATE START/END	12/22/06

DIAMETER OF DRILLED BOREHOLE 3.83 INCH

GROUND WATER DEPTH (STATIC WATER LEVEL DEPTH) 13.49 (below grade) 1.87 FT ground to casing

I.D. OF DRILLING RODS 2 INCH

TESTED INTERVAL FROM / TO (FT)	TIME (HR:MIN)	ELAPSED TIME (Δt MIN)	DEPTH UNDER WATER (FT)	DEPTH TO WATER (FT)	CUMULATIVE RECOVERY (ΔH FT)	RECOVERY RATE (ΔH/Δt)
40.5-49.0'	11:45:00	0.0	2.699	39.77	0.00	-
L= 8.5 ft	11:46:00	1.0	2.728	39.74	0.03	0.02900
	11:47:00	2.0	2.728	39.74	0.03	0.01450
	11:48:00	3.0	2.713	39.75	0.01	0.00467
	11:49:00	4.0	2.699	39.77	0.00	0.00000
	11:50:00	5.0	2.699	39.77	0.00	0.00000
	11:55:00	10.0	2.656	39.81	-0.04	-0.00430
	12:00:00	15.0	2.656	39.81	-0.04	-0.00287
	12:05:00	20.0	2.642	39.83	-0.06	-0.00285
	12:10:00	25.0	2.656	39.81	-0.04	-0.00172
	12:15:00	30.0	2.656	39.81	-0.04	-0.00143

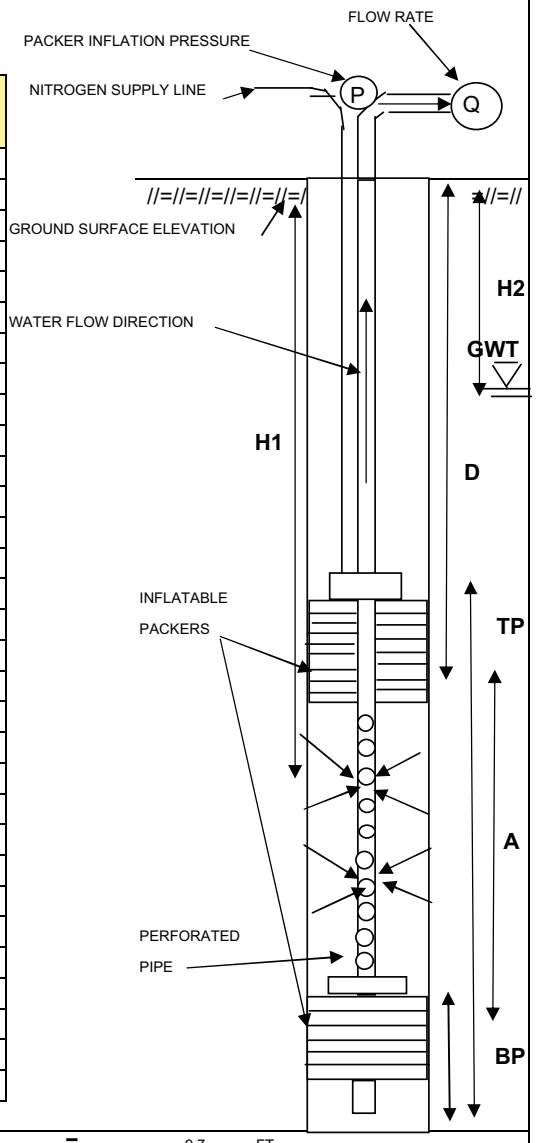

LEGEND:				
	A - TOTAL LENGTH OF TEST SECTION (FT)	=	9.7	FT
	TP - TOTAL LENGTH OF TOP PACKER AND ASSEMBLY	=	15.7	FT
	BP - TOTAL LENGTH OF BOTTOM PACKER AND ASSEMBLY	=	4.65	FT
	D - DISTANCE BETWEEN GROUND SURFACE AND TOP OF THE TEST ZONE	=	40.5	FT
	PIP - PACKER INFLATION PRESSURE (D PSI **+ 50 PSI**)	=	180	PSI
	H1- DISTANCE BETWEEN WATER PRESSURE GAUGE AND GROUND SURFACE	=	42.5	FT
	H2- DISTANCE BETWEEN GROUND SURFACE AND GROUND WATER TABLE	=	13.49	FT

NOTES:

The tested interval begins at the bottom of the well casing (40.5 ft b/g) and ends at 49.0 ft b/g. Only the bottom packer was inflated for this interval.
After 1/2 hour, no recovery was observed at this test interval. "Recovery" sample was not taken for this test interval.

PACKER TEST LOG

GZA GEOENVIRONMENTAL OF NEW YORK 440 NINTH AVENUE, 18th FLOOR NEW YORK, NEW YORK 10001 SCIENTISTS AND ENGINEERS	Client Entergy Indian Point Energy Cente Buchanan, NY	BORING NO./TEST NO. MW-63 T1 SHEET 1 of 1 FILE NO. 41.0017869.01 PROJECT LOCATION Indian Point

CONTRACTOR	Aquifer Drilling & Testing, Inc.	BORING COORDINATES	N 462970.4209	E 604251.2759	
FOREMAN	Dave Carter	GROUND SURFACE EL.(FT)	14.178	DATUM	NGVD 29
GZA ENG.	Sara Covelli	FINAL BORING DEPTH (FT)	201	DATE START/END	10/11/06
DIAMETER OF DRILLED BOREHOLE	3.83 INCH	GROUND WATER DEPTH (STATIC WATER LEVEL DEPTH)	12.46 FT (below grade)		1.83 FT ground to casing
I.D. OF DRILLING RODS	2 INCH				

TESTED INTERVAL FROM / TO (FT)	TIME (HR:MIN:SEC)	ELAPSED TIME (Δt MIN)	DEPTH UNDER WATER (FT)	DEPTH TO WATER (FT)	DRAWDOWN (ΔH FT)	PUMPING RATE (gal/min)	SPECIFIC CAPACITY (gpm/ft)
36'(casing) to 50.5'	8:48	0	30.067	16.63	4.173	2.850	0.683
L= 14.5 ft	8:49	1	29.895	16.81	4.345	2.850	0.656
	8:50	2	29.794	16.91	4.446	2.850	0.641
	8:51	3	29.665	17.04	4.575	2.850	0.623
	8:52	4	29.607	17.09	4.633	2.850	0.615
	8:53	5	29.593	17.11	4.647	2.850	0.613
	8:54	6	29.622	17.08	4.618	2.850	0.617
	8:55	7	29.622	17.08	4.618	2.850	0.617
	8:56	8	29.650	17.05	4.59	2.850	0.621
	8:57	9	29.650	17.05	4.59	2.850	0.621
	8:58	10	29.622	17.08	4.618	2.850	0.617
	8:59	11	29.607	17.09	4.633	2.850	0.615
	9:00	12	29.622	17.08	4.618	2.850	0.617
	9:01	13	29.607	17.09	4.633	2.850	0.615
	9:02	14	29.593	17.11	4.647	2.850	0.613
	9:03	15	29.593	17.11	4.647	2.850	0.613
	9:04	16	29.579	17.12	4.661	2.800	0.601
	9:05	17	29.564	17.14	4.676	2.800	0.599
	9:06	18	29.564	17.14	4.676	2.800	0.599
	9:07	19	29.536	17.16	4.704	2.800	0.595
	9:08	20	29.521	17.18	4.719	2.800	0.593
	9:09	21	29.521	17.18	4.719	2.800	0.593
	9:10	22	29.507	17.19	4.733	2.800	0.592
	9:11	23	29.478	17.22	4.762	2.800	0.588
	9:12	24	29.449	17.25	4.791	2.800	0.584
	9:13	25	29.435	17.27	4.805	2.800	0.583
	9:14	26	29.449	17.25	4.791	2.800	0.584
	9:15	27	29.421	17.28	4.819	2.800	0.581
	9:16	28	29.392	17.31	4.848	2.800	0.578
	9:17	29	29.363	17.34	4.877	2.800	0.574
	9:18	30	29.349	17.35	4.891	2.800	0.572

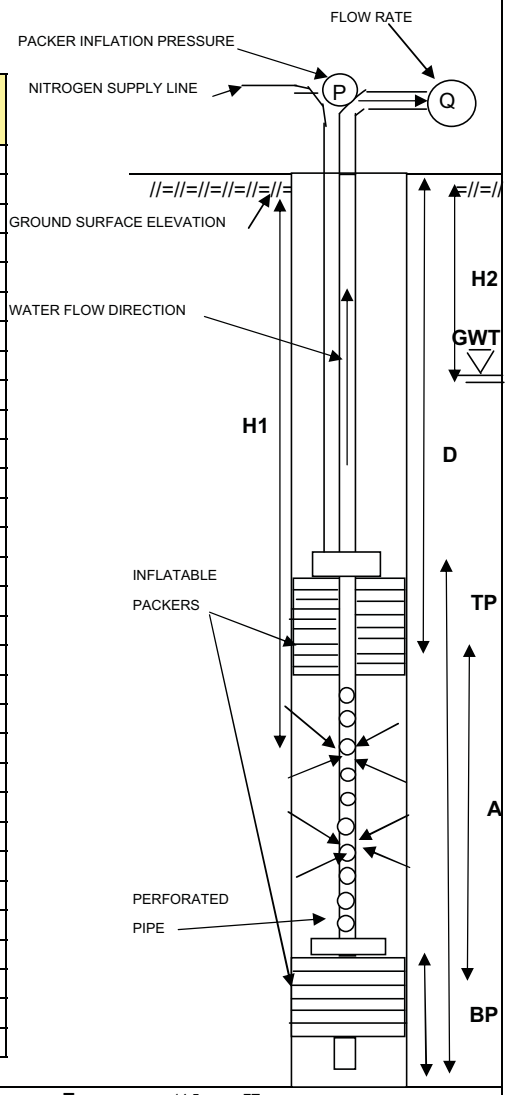

LEGEND:			
A - TOTAL LENGTH OF TEST SECTION (FT)	=	14.5	FT
TP - TOTAL LENGTH OF TOP PACKER AND ASSEMBLY	=	15.7	FT
BP - TOTAL LENGTH OF BOTTOM PACKER AND ASSEMBLY	=	4.65	FT
D - DISTANCE BETWEEN GROUND SURFACE AND TOP OF THE TEST ZONE	=	36.0	FT
PIP - PACKER INFLATION PRESSURE (D PSI + **50 PSI**)	=	185	PSI
H1- DISTANCE BETWEEN WATER PRESSURE GAUGE AND GROUND SURFACE	=	46.7	FT
H2- DISTANCE BETWEEN GROUND SURFACE AND GROUND WATER TABLE	=	12.46	FT

NOTE: Only the bottom packer was inflated for this test. The interval tested here may be considered from bottom of casing at 36.0' to 50.5' b/g.

GZA

BORING NO. /TEST NO. MW-63 T1

PACKER TEST LOG

GZA GEOENVIRONMENTAL OF NEW YORK 440 NINTH AVENUE, 18th FLOOR NEW YORK, NEW YORK 10001 SCIENTISTS AND ENGINEERS	Client Entergy Indian Point Energy Cente Buchanan, NY	BORING NO./TEST NO.	MW-63 T2
		SHEET	1 of 1
		FILE NO.	41.0017869.01
		PROJECT LOCATION	Indian Point

CONTRACTOR	Aquifer Drilling & Testing, Inc.	BORING COORDINATES	N 462970.4209	E 604251.2759	
FOREMAN	Ed Borner	GROUND SURFACE EL.(FT)	14.178	DATUM	NGVD 29
GZA ENG.	Sara Covelli	FINAL BORING DEPTH (FT)	201	DATE START/END	10/17/06
DIAMETER OF DRILLED BOREHOLE	3.83 INCH	GROUND WATER DEPTH (STATIC WATER LEVEL DEPTH)	12.20 (below grade)		1.83 FT ground to casing
I.D. OF DRILLING RODS	2 INCH				

TESTED INTERVAL FROM / TO (FT)	TIME (HR:MIN)	ELAPSED TIME (Δt MIN)	DEPTH UNDER WATER (FT)	DEPTH TO WATER (FT)	CUMULATIVE RECOVERY (ΔH FT)	RECOVERY RATE (ΔH/Δt)
50.5-60.2'	11:39:00	0.0	15.985	40.62	0.00	-
L= 9.7 ft	11:39:30	0.5	21.640	34.96	5.66	11.31000
	11:40:00	1.0	29.392	27.21	13.41	13.40700
	11:40:30	1.5	34.073	22.53	18.09	12.05867
	11:41:00	2.0	36.614	19.99	20.63	10.31450
	11:41:30	2.5	38.582	18.02	22.60	9.03880
	11:42:00	3.0	40.090	16.51	24.11	8.03500
	11:42:30	3.5	41.210	15.39	25.23	7.20714
	11:43:00	4.0	42.014	14.59	26.03	6.50725
	11:43:30	4.5	42.589	14.01	26.60	5.91200
	11:44:00	5.0	42.934	13.67	26.95	5.38980
	11:44:30	5.5	43.178	13.42	27.19	4.94418
	11:45:00	6.0	43.322	13.28	27.34	4.55617
	11:45:30	6.5	43.436	13.16	27.45	4.22323

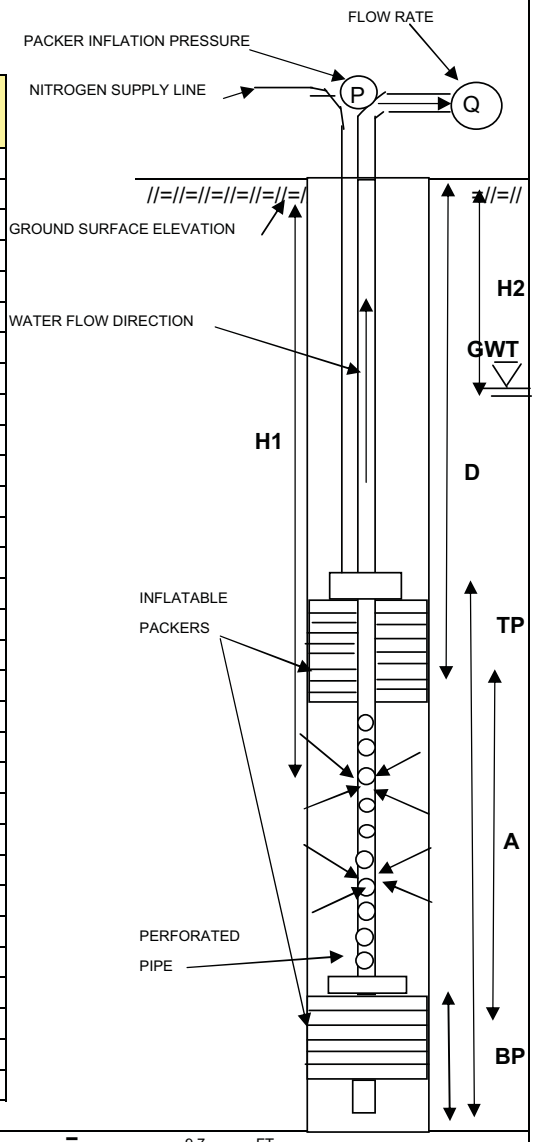

LEGEND:				
	A - TOTAL LENGTH OF TEST SECTION (FT)	=	9.7	FT
	TP - TOTAL LENGTH OF TOP PACKER AND ASSEMBLY	=	15.7	FT
	BP - TOTAL LENGTH OF BOTTOM PACKER AND ASSEMBLY	=	4.65	FT
	D - DISTANCE BETWEEN GROUND SURFACE AND TOP OF THE TEST ZONE	=	50.5	FT
	PIP - PACKER INFLATION PRESSURE (D PSI **+ 50 PSI**)	=	190	PSI
	H1- DISTANCE BETWEEN WATER PRESSURE GAUGE AND GROUND SURFACE	=	56.6	FT
	H2- DISTANCE BETWEEN GROUND SURFACE AND GROUND WATER TABLE	=	12.20	FT

GZA

BORING NO. /TEST NO. MW-63 T2

PACKER TEST LOG

GZA GEOENVIRONMENTAL OF NEW YORK 440 NINTH AVENUE, 18th FLOOR NEW YORK, NEW YORK 10001 SCIENTISTS AND ENGINEERS	Client Entergy Indian Point Energy Cente Buchanan, NY	BORING NO./TEST NO.	MW-63 T3
		SHEET	1 of 1
		FILE NO.	41.0017869.01
		PROJECT LOCATION	Indian Point

CONTRACTOR	Aquifer Drilling & Testing, Inc.	BORING COORDINATES	N 462970.4209	E 604251.2759	
FOREMAN	Ed Borner	GROUND SURFACE EL.(FT)	14.178	DATUM	NGVD 29
GZA ENG.	Sara Covelli	FINAL BORING DEPTH (FT)	201	DATE START/END	11/14/06
DIAMETER OF DRILLED BOREHOLE	3.83 INCH	GROUND WATER DEPTH (STATIC WATER LEVEL DEPTH)	11.68	(below grade)	1.83 FT ground to casing
I.D. OF DRILLING RODS	2 INCH				

TESTED INTERVAL FROM / TO (FT)	TIME (HR:MIN)	ELAPSED TIME (Δt MIN)	DEPTH UNDER WATER (FT)	DEPTH TO WATER (FT)	CUMULATIVE RECOVERY (ΔH FT)	RECOVERY RATE (ΔH/Δt)
60.8-70.5'	8:59:00	0.0	29.737	37.26	0.00	-
L= 9.7 ft	9:00:00	1.0	32.077	34.92	2.34	2.34000
	9:01:00	2.0	34.173	32.83	4.44	2.21800
	9:02:00	3.0	36.098	30.90	6.36	2.12033
	9:03:00	4.0	37.878	29.12	8.14	2.03525
	9:04:00	5.0	39.544	27.46	9.81	1.96140
	9:05:00	6.0	41.067	25.93	11.33	1.88833
	9:06:00	7.0	42.460	24.54	12.72	1.81757
	9:07:00	8.0	43.752	23.25	14.02	1.75188
	9:08:00	9.0	45.131	21.87	15.39	1.71044
	9:09:00	10.0	46.036	20.96	16.30	1.62990
	9:10:00	11.0	47.056	19.94	17.32	1.57445
	9:11:00	12.0	47.961	19.04	18.22	1.51867
	9:12:00	13.0	48.823	18.18	19.09	1.46815
	9:13:00	14.0	49.671	17.33	19.93	1.42386
	9:14:00	15.0	50.231	16.77	20.49	1.36627
	9:15:00	16.0	50.849	16.15	21.11	1.31950
	9:16:00	17.0	51.380	15.62	21.64	1.27312
	9:17:00	18.0	51.855	15.15	22.12	1.22878
	9:18:00	19.0	52.286	14.71	22.55	1.18679
	9:19:00	20.0	52.674	14.33	22.94	1.14685
	9:20:00	21.0	53.004	14.00	23.27	1.10795
	9:21:00	22.0	53.306	13.69	23.57	1.07132
	9:22:00	23.0	53.564	13.44	23.83	1.03596
	9:23:00	24.0	53.780	13.22	24.04	1.00179
	9:24:00	25.0	53.981	13.02	24.24	0.96976
	9:25:00	26.0	54.139	12.86	24.40	0.93854
	9:26:00	27.0	54.283	12.72	24.55	0.90911
	9:27:00	28.0	54.412	12.59	24.68	0.88125
	9:28:00	29.0	54.513	12.49	24.78	0.85434
	9:29:00	30.0	54.599	12.40	24.86	0.82873

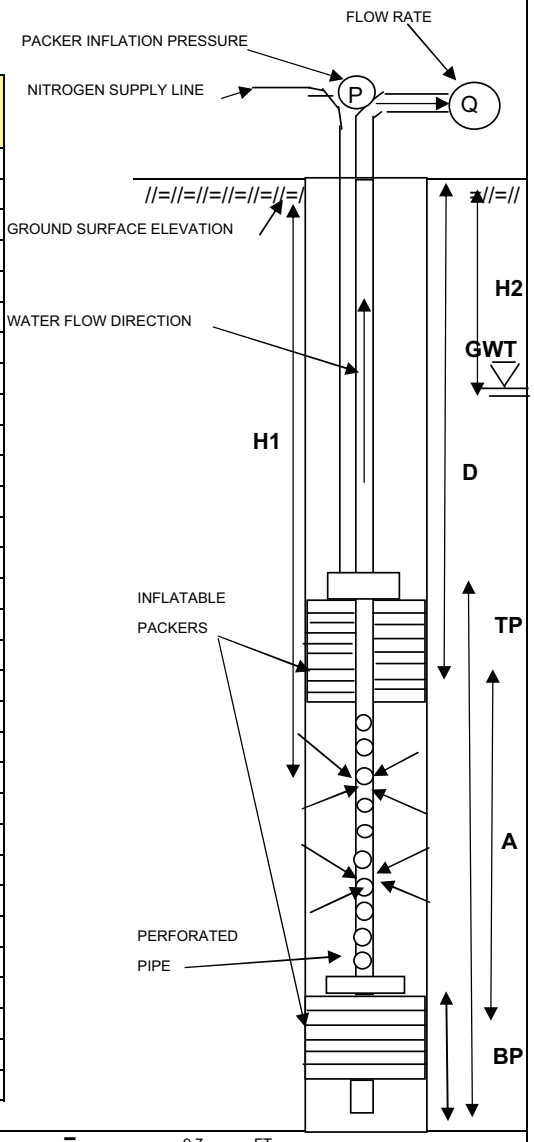

LEGEND:				
	A - TOTAL LENGTH OF TEST SECTION (FT)	=	9.7	FT
	TP - TOTAL LENGTH OF TOP PACKER AND ASSEMBLY	=	15.7	FT
	BP - TOTAL LENGTH OF BOTTOM PACKER AND ASSEMBLY	=	4.65	FT
	D - DISTANCE BETWEEN GROUND SURFACE AND TOP OF THE TEST ZONE	=	60.8	FT
	PIP - PACKER INFLATION PRESSURE (D PSI **+ 50 PSI**)	=	195	PSI
	H1- DISTANCE BETWEEN WATER PRESSURE GAUGE AND GROUND SURFACE	=	67.0	FT
	H2- DISTANCE BETWEEN GROUND SURFACE AND GROUND WATER TABLE	=	11.68	FT

GZA

BORING NO. /TEST NO. MW-63 T3

PACKER TEST LOG

GZA GEOENVIRONMENTAL OF NEW YORK 440 NINTH AVENUE, 18th FLOOR NEW YORK, NEW YORK 10001 SCIENTISTS AND ENGINEERS	Client Entergy Indian Point Energy Cente Buchanan, NY	BORING NO./TEST NO.	MW-63 T4
		SHEET	1 of 1
		FILE NO.	41.0017869.01
		PROJECT LOCATION	Indian Point

CONTRACTOR	Aquifer Drilling & Testing, Inc.	BORING COORDINATES	N 462970.4209	E 604251.2759	
FOREMAN	Ed Borner	GROUND SURFACE EL.(FT)	14.178	DATUM	NGVD 29
GZA ENG.	Sara Covelli	FINAL BORING DEPTH (FT)	201	DATE START/END	11/13/06
DIAMETER OF DRILLED BOREHOLE	3.83 INCH	GROUND WATER DEPTH (STATIC WATER LEVEL DEPTH)	12.30 (below grade)		1.83 FT ground to casing
I.D. OF DRILLING RODS	2 INCH				

TESTED INTERVAL FROM / TO (FT)	TIME (HR:MIN)	ELAPSED TIME (Δt MIN)	DEPTH UNDER WATER (FT)	DEPTH TO WATER (FT)	CUMULATIVE RECOVERY (ΔH FT)	RECOVERY RATE (ΔH/Δt)
71.0-80.7'	13:54:00	0.0	42.690	34.61	0.00	-
L= 9.7 ft	13:55:00	1.0	45.490	31.81	2.80	2.80000
	13:56:00	2.0	48.004	29.30	5.31	2.65700
	13:57:00	3.0	50.260	27.04	7.57	2.52333
	13:58:00	4.0	52.271	25.03	9.58	2.39525
	13:59:00	5.0	54.053	23.25	11.36	2.27260
	14:00:00	6.0	55.633	21.67	12.94	2.15717
	14:01:00	7.0	57.027	20.27	14.34	2.04814
	14:02:00	8.0	58.263	19.04	15.57	1.94663
	14:03:00	9.0	59.341	17.96	16.65	1.85011
	14:04:00	10.0	60.275	17.03	17.59	1.75850
	14:05:00	11.0	61.080	16.22	18.39	1.67182
	14:06:00	12.0	61.784	15.52	19.09	1.59117
	14:07:00	13.0	62.388	14.91	19.70	1.51523
	14:08:00	14.0	62.891	14.41	20.20	1.44293
	14:09:00	15.0	63.307	13.99	20.62	1.37447
	14:10:00	16.0	63.667	13.63	20.98	1.31106
	14:11:00	17.0	63.969	13.33	21.28	1.25171
	14:12:00	18.0	64.213	13.09	21.52	1.19572
	14:13:00	19.0	64.428	12.87	21.74	1.14411
	14:14:00	20.0	64.587	12.71	21.90	1.09485
	14:15:00	21.0	64.716	12.58	22.03	1.04886
	14:16:00	22.0	64.817	12.48	22.13	1.00577
	14:17:00	23.0	64.932	12.37	22.24	0.96704
	14:18:00	24.0	64.989	12.31	22.30	0.92913
	14:20:00	25.0	65.133	12.17	22.44	0.89772
	14:22:00	27.0	65.205	12.10	22.52	0.83389
	14:24:00	29.0	65.248	12.05	22.56	0.77786
	14:26:00	31.0	65.291	12.01	22.60	0.72906
	14:28:00	33.0	65.320	11.98	22.63	0.68576
	14:30:00	35.0	65.348	11.95	22.66	0.64737

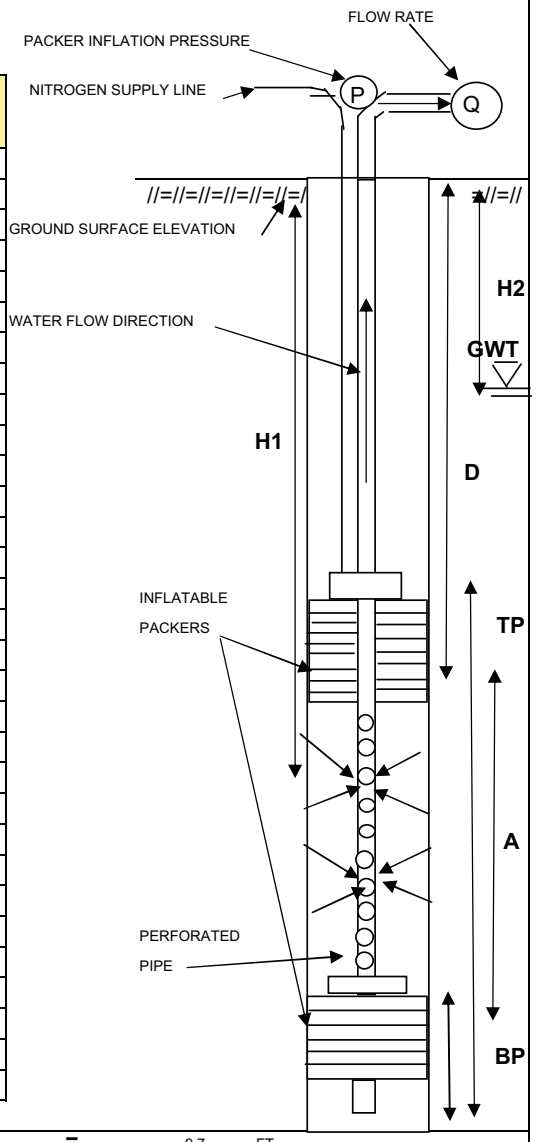

LEGEND:				
	A - TOTAL LENGTH OF TEST SECTION (FT)	=	9.7	FT
	TP - TOTAL LENGTH OF TOP PACKER AND ASSEMBLY	=	15.7	FT
	BP - TOTAL LENGTH OF BOTTOM PACKER AND ASSEMBLY	=	4.65	FT
	D - DISTANCE BETWEEN GROUND SURFACE AND TOP OF THE TEST ZONE	=	71.0	FT
	PIP - PACKER INFLATION PRESSURE (D PSI **+ 50 PSI**)	=	180	PSI
	H1- DISTANCE BETWEEN WATER PRESSURE GAUGE AND GROUND SURFACE	=	77.3	FT
	H2- DISTANCE BETWEEN GROUND SURFACE AND GROUND WATER TABLE	=	12.30	FT

GZA

BORING NO. /TEST NO. MW-63 T4

PACKER TEST LOG

GZA GEOENVIRONMENTAL OF NEW YORK 440 NINTH AVENUE, 18th FLOOR NEW YORK, NEW YORK 10001 SCIENTISTS AND ENGINEERS	Client Entergy Indian Point Energy Cente Buchanan, NY	BORING NO./TEST NO.	MW-63 T5
		SHEET	1 of 1
		FILE NO.	41.0017869.01
		PROJECT LOCATION	Indian Point

CONTRACTOR	Aquifer Drilling & Testing, Inc.	BORING COORDINATES	N 462970.4209	E 604251.2759	
FOREMAN	Ed Borner	GROUND SURFACE EL.(FT)	14.178	DATUM	NGVD 29
GZA ENG.	Sara Covelli	FINAL BORING DEPTH (FT)	201	DATE START/END	11/13/06
DIAMETER OF DRILLED BOREHOLE	3.83 INCH	GROUND WATER DEPTH (STATIC WATER LEVEL DEPTH)	12.73 (below grade)		1.83 FT ground to casing
I.D. OF DRILLING RODS	2 INCH				

TESTED INTERVAL FROM / TO (FT)	TIME (HR:MIN)	ELAPSED TIME (Δt MIN)	DEPTH UNDER WATER (FT)	DEPTH TO WATER (FT)	CUMULATIVE RECOVERY (ΔH FT)	RECOVERY RATE (ΔH/Δt)
78.6-88.3	12:13:00	0.0	57.516	28.28	0.00	-
L= 9.7 ft	12:13:30	0.5	61.338	24.46	3.82	7.64400
	12:14:00	1.0	64.716	21.08	7.20	7.20000
	12:14:30	1.5	67.246	18.55	9.73	6.48667
	12:15:00	2.0	69.057	16.74	11.54	5.77050
	12:15:30	2.5	70.336	15.46	12.82	5.12800
	12:16:00	3.0	71.213	14.59	13.70	4.56567
	12:16:30	3.5	71.817	13.98	14.30	4.08600
	12:17:00	4.0	72.234	13.57	14.72	3.67950
	12:17:30	4.5	72.507	13.29	14.99	3.33133
	12:18:00	5.0	72.723	13.08	15.21	3.04140
	12:18:30	5.5	72.852	12.95	15.34	2.78836
	12:19:00	6.0	72.967	12.83	15.45	2.57517
	12:19:30	6.5	73.039	12.76	15.52	2.38815
	12:20:00	7.0	73.097	12.70	15.58	2.22586
	12:20:30	7.5	73.140	12.66	15.62	2.08320
	12:21:00	8.0	73.168	12.63	15.65	1.95650
	12:21:30	8.5	73.197	12.60	15.68	1.84482
	12:22:00	9.0	73.226	12.57	15.71	1.74556
	12:22:30	9.5	73.255	12.55	15.74	1.65674
	12:23:00	10.0	73.269	12.53	15.75	1.57530

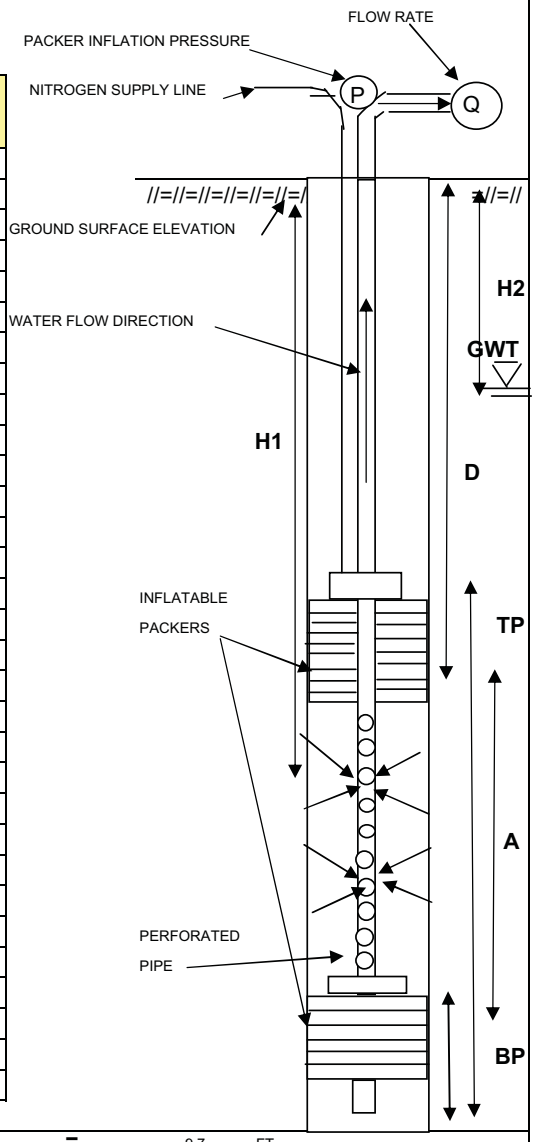

LEGEND:				
	A - TOTAL LENGTH OF TEST SECTION (FT)	=	9.7	FT
	TP - TOTAL LENGTH OF TOP PACKER AND ASSEMBLY	=	15.7	FT
	BP - TOTAL LENGTH OF BOTTOM PACKER AND ASSEMBLY	=	4.65	FT
	D - DISTANCE BETWEEN GROUND SURFACE AND TOP OF THE TEST ZONE	=	78.6	FT
	PIP - PACKER INFLATION PRESSURE (D PSI **+ 50 PSI**)	=	180	PSI
	H1- DISTANCE BETWEEN WATER PRESSURE GAUGE AND GROUND SURFACE	=	85.8	FT
	H2- DISTANCE BETWEEN GROUND SURFACE AND GROUND WATER TABLE	=	12.73	FT

GZA

BORING NO. /TEST NO. MW-63 T5

PACKER TEST LOG

GZA GEOENVIRONMENTAL OF NEW YORK 440 NINTH AVENUE, 18th FLOOR NEW YORK, NEW YORK 10001 SCIENTISTS AND ENGINEERS	Client Entergy Indian Point Energy Cente Buchanan, NY	BORING NO./TEST NO.	MW-63 T6
		SHEET	1 of 1
		FILE NO.	41.0017869.01
		PROJECT LOCATION	Indian Point

CONTRACTOR	Aquifer Drilling & Testing, Inc.	BORING COORDINATES	N 462970.4209	E 604251.2759	
FOREMAN	Ed Borner	GROUND SURFACE EL.(FT)	14.178	DATUM	NGVD 29
GZA ENG.	Sara Covelli	FINAL BORING DEPTH (FT)	201	DATE START/END	11/13/06
DIAMETER OF DRILLED BOREHOLE	3.83 INCH	GROUND WATER DEPTH (STATIC WATER LEVEL DEPTH)	12.79	(below grade)	1.83 FT ground to casing
I.D. OF DRILLING RODS	2 INCH				

TESTED INTERVAL FROM / TO (FT)	TIME (HR:MIN)	ELAPSED TIME (Δt MIN)	DEPTH UNDER WATER (FT)	DEPTH TO WATER (FT)	CUMULATIVE RECOVERY (ΔH FT)	RECOVERY RATE (ΔH/Δt)
88.3-98.0'	11:07:00	0.0	55.950	38.65	0.00	-
L= 9.7 ft	11:08:00	1.0	62.172	32.43	6.22	6.22200
	11:09:00	2.0	62.792	31.81	6.84	3.42100
	11:10:00	3.0	71.946	22.65	16.00	5.33200
	11:11:00	4.0	74.980	19.62	19.03	4.75750
	11:12:00	5.0	77.166	17.43	21.22	4.24320
	11:13:00	6.0	78.690	15.91	22.74	3.79000
	11:14:00	7.0	79.711	14.89	23.76	3.39443
	11:15:00	8.0	80.329	14.27	24.38	3.04738
	11:16:00	9.0	80.703	13.90	24.75	2.75033
	11:17:00	10.0	80.890	13.71	24.94	2.49400
	11:18:00	11.0	80.976	13.62	25.03	2.27509
	11:19:00	12.0	81.019	13.58	25.07	2.08908

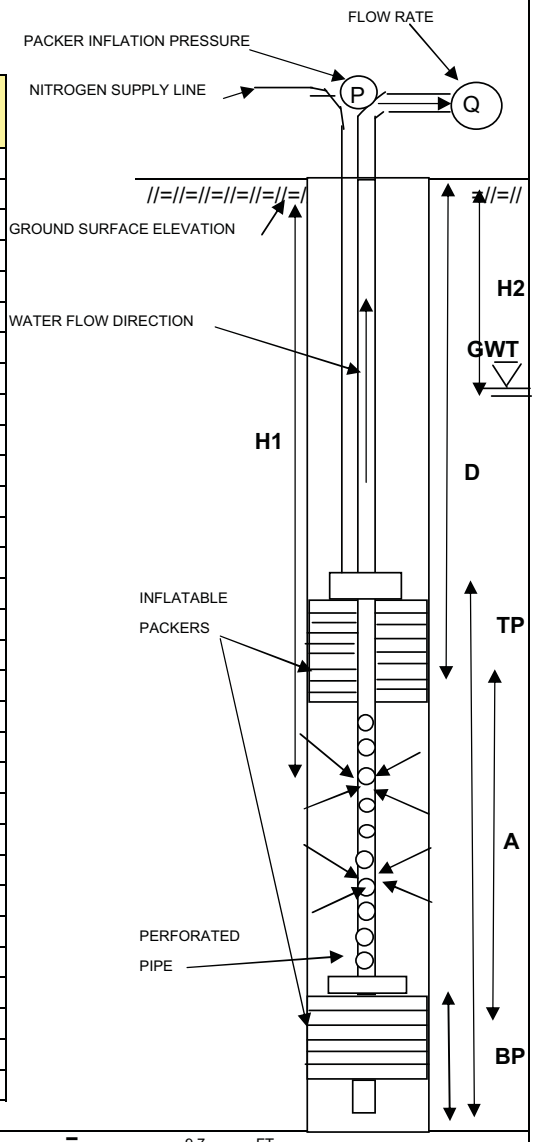

LEGEND:				
	A - TOTAL LENGTH OF TEST SECTION (FT)	=	9.7	FT
	TP - TOTAL LENGTH OF TOP PACKER AND ASSEMBLY	=	15.7	FT
	BP - TOTAL LENGTH OF BOTTOM PACKER AND ASSEMBLY	=	4.65	FT
	D - DISTANCE BETWEEN GROUND SURFACE AND TOP OF THE TEST ZONE	=	88.3	FT
	PIP - PACKER INFLATION PRESSURE (D PSI **+ 50 PSI**)	=	180	PSI
	H1- DISTANCE BETWEEN WATER PRESSURE GAUGE AND GROUND SURFACE	=	94.6	FT
	H2- DISTANCE BETWEEN GROUND SURFACE AND GROUND WATER TABLE	=	12.79	FT

GZA

BORING NO. /TEST NO. MW-63 T6

PACKER TEST LOG

GZA GEOENVIRONMENTAL OF NEW YORK 440 NINTH AVENUE, 18th FLOOR NEW YORK, NEW YORK 10001 SCIENTISTS AND ENGINEERS	Client Entergy Indian Point Energy Cente Buchanan, NY	BORING NO./TEST NO.	MW-63 T7
		SHEET	1 of 1
		FILE NO.	41.0017869.01
		PROJECT LOCATION	Indian Point

CONTRACTOR	Aquifer Drilling & Testing, Inc.	BORING COORDINATES	N 462970.4209	E 604251.2759	
FOREMAN	Ed Borner	GROUND SURFACE EL.(FT)	14.178	DATUM	NGVD 29
GZA ENG.	Sara Covelli	FINAL BORING DEPTH (FT)	201	DATE START/END	11/13/06
DIAMETER OF DRILLED BOREHOLE	3.83 INCH	GROUND WATER DEPTH (STATIC WATER LEVEL DEPTH)	12.22 (below grade)		1.83 FT ground to casing
I.D. OF DRILLING RODS	2 INCH				

TESTED INTERVAL FROM / TO (FT)	TIME (HR:MIN)	ELAPSED TIME (Δt MIN)	DEPTH UNDER WATER (FT)	DEPTH TO WATER (FT)	CUMULATIVE RECOVERY (ΔH FT)	RECOVERY RATE (ΔH/Δt)
100.0-109.7'	8:39:00	0.0	69.704	36.40	0.00	-
L= 9.7 ft	8:40:00	1.0	70.566	35.53	0.86	0.86200
	8:41:00	2.0	71.343	34.76	1.64	0.81950
	8:42:00	3.0	72.090	34.01	2.39	0.79533
	8:43:00	4.0	72.809	33.29	3.11	0.77625
	8:44:00	5.0	73.499	32.60	3.80	0.75900
	8:45:00	6.0	74.132	31.97	4.43	0.73800
	8:46:00	7.0	74.779	31.32	5.08	0.72500
	8:47:00	8.0	75.368	30.73	5.66	0.70800
	8:48:00	9.0	75.972	30.13	6.27	0.69644
	8:49:00	10.0	76.533	29.57	6.83	0.68290
	8:50:00	11.0	77.094	29.01	7.39	0.67182
	8:51:00	12.0	77.626	28.47	7.92	0.66017
	8:52:00	13.0	78.158	27.94	8.45	0.65031
	8:53:00	14.0	78.675	27.43	8.97	0.64079
	8:54:00	15.0	79.150	26.95	9.45	0.62973
	8:55:00	16.0	79.624	26.48	9.92	0.62000
	8:56:00	17.0	80.085	26.02	10.38	0.61065
	8:57:00	18.0	80.545	25.56	10.84	0.60228
	8:58:00	19.0	80.976	25.12	11.27	0.59326
	8:59:00	20.0	81.408	24.69	11.70	0.58520
	9:00:00	21.0	81.810	24.29	12.11	0.57648
	9:01:00	22.0	82.213	23.89	12.51	0.56859
	9:02:00	23.0	82.601	23.50	12.90	0.56074
	9:03:00	24.0	82.989	23.11	13.29	0.55354
	9:04:00	25.0	83.349	22.75	13.65	0.54580
	9:09:00	30.0	85.003	21.10	15.30	0.50997
	9:14:00	35.0	86.441	19.66	16.74	0.47820
	9:19:00	40.0	87.649	18.45	17.95	0.44863
	9:24:00	45.0	88.685	17.42	18.98	0.42180
	9:34:00	55.0	90.382	15.72	20.68	0.37596

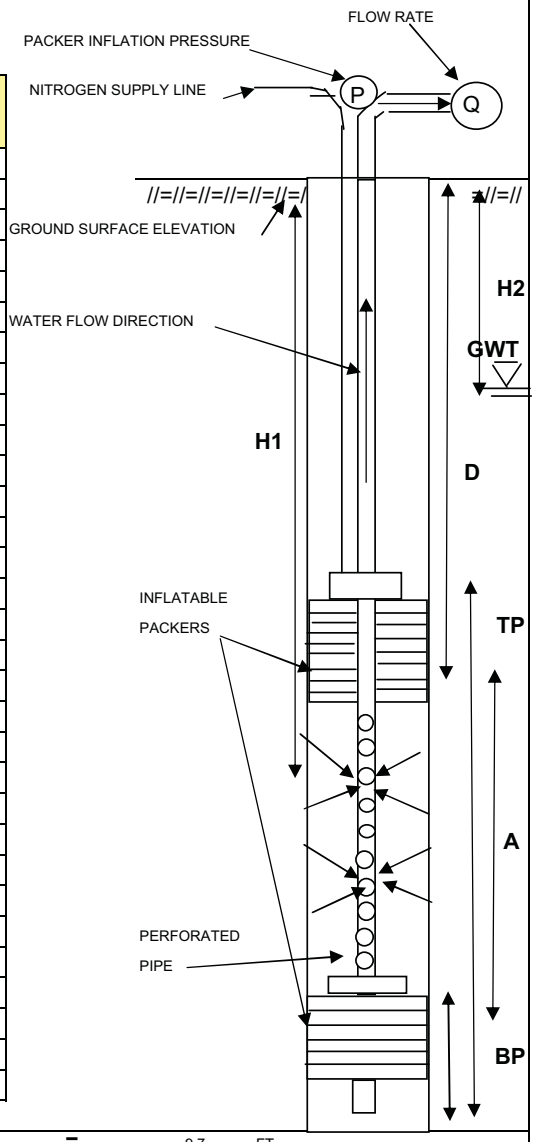

LEGEND:				
	A - TOTAL LENGTH OF TEST SECTION (FT)	=	9.7	FT
	TP - TOTAL LENGTH OF TOP PACKER AND ASSEMBLY	=	15.7	FT
	BP - TOTAL LENGTH OF BOTTOM PACKER AND ASSEMBLY	=	4.65	FT
	D - DISTANCE BETWEEN GROUND SURFACE AND TOP OF THE TEST ZONE	=	100.0	FT
	PIP - PACKER INFLATION PRESSURE (D PSI **+ 50 PSI**)	=	180	PSI
	H1- DISTANCE BETWEEN WATER PRESSURE GAUGE AND GROUND SURFACE	=	106.1	FT
	H2- DISTANCE BETWEEN GROUND SURFACE AND GROUND WATER TABLE	=	12.22	FT

GZA

BORING NO. /TEST NO. MW-63 T7

PACKER TEST LOG

GZA GEOENVIRONMENTAL OF NEW YORK 440 NINTH AVENUE, 18th FLOOR NEW YORK, NEW YORK 10001 SCIENTISTS AND ENGINEERS	Client Entergy Indian Point Energy Cente Buchanan, NY	BORING NO./TEST NO.	MW-63 T8
		SHEET	1 of 1
		FILE NO.	41.0017869.01
		PROJECT LOCATION	Indian Point

CONTRACTOR	Aquifer Drilling & Testing, Inc.	BORING COORDINATES	N 462970.4209	E 604251.2759	
FOREMAN	Ed Borner	GROUND SURFACE EL.(FT)	14.178	DATUM	NGVD 29
GZA ENG.	Sara Covelli	FINAL BORING DEPTH (FT)	201	DATE START/END	11/10/06
DIAMETER OF DRILLED BOREHOLE	3.83 INCH	GROUND WATER DEPTH (STATIC WATER LEVEL DEPTH)	11.24	(below grade)	1.83 FT ground to casing
I.D. OF DRILLING RODS	2 INCH				

TESTED INTERVAL FROM / TO (FT)	TIME (HR:MIN)	ELAPSED TIME (Δt MIN)	DEPTH UNDER WATER (FT)	DEPTH TO WATER (FT)	CUMULATIVE RECOVERY (ΔH FT)	RECOVERY RATE (ΔH/Δt)
110.0-119.7'	14:41:00	0.0	85.492	29.41	0.00	-
L= 9.7 ft	14:41:30	0.5	88.340	26.56	2.85	5.69600
	14:42:00	1.0	90.685	24.22	5.19	5.19300
	14:42:30	1.5	92.727	22.17	7.24	4.82333
	14:43:00	2.0	94.526	20.37	9.03	4.51700
	14:43:30	2.5	96.079	18.82	10.59	4.23480
	14:44:00	3.0	97.417	17.48	11.93	3.97500
	14:44:30	3.5	98.568	16.33	13.08	3.73600
	14:45:00	4.0	99.532	15.37	14.04	3.51000
	14:45:30	4.5	100.338	14.56	14.85	3.29911
	14:46:00	5.0	100.986	13.91	15.49	3.09880
	14:46:30	5.5	101.547	13.35	16.06	2.91909
	14:47:00	6.0	101.993	12.91	16.50	2.75017
	14:47:30	6.5	102.367	12.53	16.88	2.59615
	14:48:00	7.0	102.684	12.22	17.19	2.45600
	14:48:30	7.5	102.943	11.96	17.45	2.32680
	14:49:00	8.0	103.130	11.77	17.64	2.20475
	14:49:30	8.5	103.303	11.60	17.81	2.09541
	14:50:00	9.0	103.432	11.47	17.94	1.99333
	14:50:30	9.5	103.533	11.37	18.04	1.89905
	14:51:00	10.0	103.619	11.28	18.13	1.81270
	14:51:30	10.5	103.691	11.21	18.20	1.73324
	14:52:00	11.0	103.749	11.15	18.26	1.65973

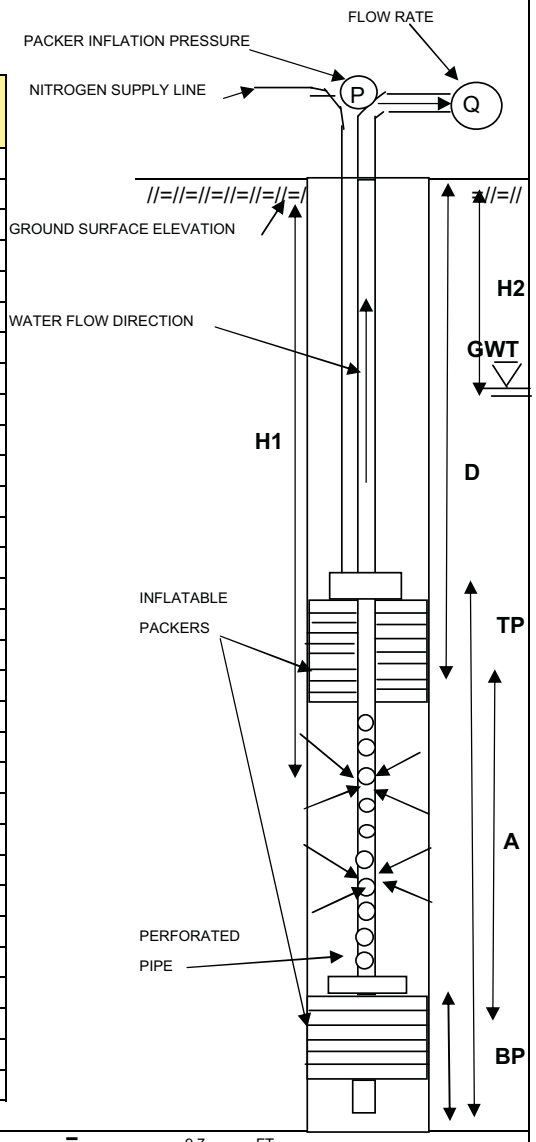

LEGEND:				
	A - TOTAL LENGTH OF TEST SECTION (FT)	=	9.7	FT
	TP - TOTAL LENGTH OF TOP PACKER AND ASSEMBLY	=	15.7	FT
	BP - TOTAL LENGTH OF BOTTOM PACKER AND ASSEMBLY	=	4.65	FT
	D - DISTANCE BETWEEN GROUND SURFACE AND TOP OF THE TEST ZONE	=	110.0	FT
	PIP - PACKER INFLATION PRESSURE (D PSI **+ 50 PSI**)	=	180	PSI
	H1- DISTANCE BETWEEN WATER PRESSURE GAUGE AND GROUND SURFACE	=	114.9	FT
	H2- DISTANCE BETWEEN GROUND SURFACE AND GROUND WATER TABLE	=	11.24	FT

GZA

BORING NO. /TEST NO. MW-63 T8

PACKER TEST LOG

GZA GEOENVIRONMENTAL OF NEW YORK 440 NINTH AVENUE, 18th FLOOR NEW YORK, NEW YORK 10001 SCIENTISTS AND ENGINEERS	Client Entergy Indian Point Energy Cente Buchanan, NY	BORING NO./TEST NO.	MW-63 T9
		SHEET	1 of 1
		FILE NO.	41.0017869.01
		PROJECT LOCATION	Indian Point

CONTRACTOR	Aquifer Drilling & Testing, Inc.	BORING COORDINATES	N 462970.4209	E 604251.2759	
FOREMAN	Ed Borner	GROUND SURFACE EL.(FT)	14.178	DATUM	NGVD 29
GZA ENG.	Sara Covelli	FINAL BORING DEPTH (FT)	201	DATE START/END	11/10/06
DIAMETER OF DRILLED BOREHOLE	3.83 INCH	GROUND WATER DEPTH (STATIC WATER LEVEL DEPTH)	12.15 (below grade)		1.83 FT ground to casing
I.D. OF DRILLING RODS	2 INCH				

TESTED INTERVAL FROM / TO (FT)	TIME (HR:MIN)	ELAPSED TIME (Δt MIN)	DEPTH UNDER WATER (FT)	DEPTH TO WATER (FT)	CUMULATIVE RECOVERY (ΔH FT)	RECOVERY RATE (ΔH/Δt)
123.5-133.2'	13:28:00	0.0	100.928	28.97	0.00	-
L= 9.7 ft	13:29:00	1.0	102.396	27.50	1.47	1.46800
	13:30:00	2.0	103.763	26.14	2.84	1.41750
	13:31:00	3.0	105.030	24.87	4.10	1.36733
	13:32:00	4.0	106.210	23.69	5.28	1.32050
	13:33:00	5.0	107.303	22.60	6.38	1.27500
	13:34:00	6.0	108.297	21.60	7.37	1.22817
	13:35:00	7.0	109.246	20.65	8.32	1.18829
	13:36:00	8.0	110.081	19.82	9.15	1.14413
	13:37:00	9.0	110.873	19.03	9.95	1.10500
	13:38:00	10.0	111.564	18.34	10.64	1.06360
	13:39:00	11.0	112.226	17.67	11.30	1.02709
	13:40:00	12.0	112.831	17.07	11.90	0.99192
	13:41:00	13.0	113.363	16.54	12.44	0.95654
	13:42:00	14.0	113.853	16.05	12.93	0.92321
	13:43:00	15.0	114.328	15.57	13.40	0.89333
	13:44:00	16.0	114.745	15.16	13.82	0.86356
	13:45:00	17.0	115.105	14.80	14.18	0.83394
	13:46:00	18.0	115.451	14.45	14.52	0.80683
	13:47:00	19.0	115.767	14.13	14.84	0.78100
	13:48:00	20.0	116.055	13.85	15.13	0.75635
	13:49:00	21.0	116.300	13.60	15.37	0.73200
	13:50:00	22.0	116.545	13.36	15.62	0.70986
	13:51:00	23.0	116.746	13.15	15.82	0.68774
	13:52:00	24.0	116.962	12.94	16.03	0.66808
	13:53:00	25.0	117.121	12.78	16.19	0.64772
	13:54:00	26.0	117.279	12.62	16.35	0.62888
	13:55:00	27.0	117.423	12.48	16.50	0.61093
	13:56:00	28.0	117.553	12.35	16.63	0.59375
	13:57:00	29.0	117.682	12.22	16.75	0.57772

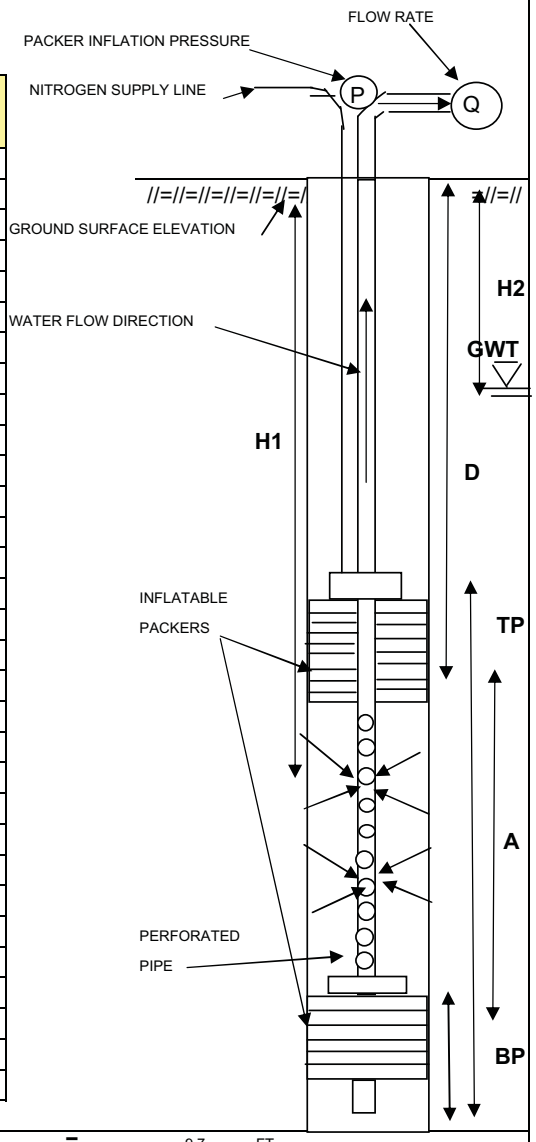

LEGEND:				
	A - TOTAL LENGTH OF TEST SECTION (FT)	=	9.7	FT
	TP - TOTAL LENGTH OF TOP PACKER AND ASSEMBLY	=	15.7	FT
	BP - TOTAL LENGTH OF BOTTOM PACKER AND ASSEMBLY	=	4.65	FT
	D - DISTANCE BETWEEN GROUND SURFACE AND TOP OF THE TEST ZONE	=	123.5	FT
	PIP - PACKER INFLATION PRESSURE (D PSI **+ 50 PSI**)	=	180	PSI
	H1- DISTANCE BETWEEN WATER PRESSURE GAUGE AND GROUND SURFACE	=	129.9	FT
	H2- DISTANCE BETWEEN GROUND SURFACE AND GROUND WATER TABLE	=	12.15	FT

GZA

BORING NO. /TEST NO. MW-63 T9

PACKER TEST LOG

GZA GEOENVIRONMENTAL OF NEW YORK 440 NINTH AVENUE, 18th FLOOR NEW YORK, NEW YORK 10001 SCIENTISTS AND ENGINEERS	Client Entergy Indian Point Energy Cente Buchanan, NY	BORING NO./TEST NO. SHEET FILE NO. PROJECT LOCATION	MW-63 T10 1 of 1 41.0017869.01 Indian Point

CONTRACTOR	Aquifer Drilling & Testing, Inc.	BORING COORDINATES	N 462970.4209	E 604251.2759	
FOREMAN	Ed Borner	GROUND SURFACE EL.(FT)	14.178	DATUM	NGVD 29
GZA ENG.	Sara Covelli	FINAL BORING DEPTH (FT)	201	DATE START/END	11/10/06
DIAMETER OF DRILLED BOREHOLE	3.83 INCH	GROUND WATER DEPTH (STATIC WATER LEVEL DEPTH)	13.60 (below grade)		1.83 FT ground to casing
I.D. OF DRILLING RODS	2 INCH				

TESTED INTERVAL FROM / TO (FT)	TIME (HR:MIN)	ELAPSED TIME (Δt MIN)	DEPTH UNDER WATER (FT)	DEPTH TO WATER (FT)	CUMULATIVE RECOVERY (ΔH FT)	RECOVERY RATE (ΔH/Δt)
145.0-154.7'	12:03:00	0.0	119.683	32.42	0.00	-
L= 9.7 ft	12:04:00	1.0	120.115	31.99	0.43	0.43200
	12:05:00	2.0	120.360	31.74	0.68	0.33850
	12:06:00	3.0	120.734	31.37	1.05	0.35033
	12:07:00	4.0	120.979	31.12	1.30	0.32400
	12:08:00	5.0	121.282	30.82	1.60	0.31980
	12:09:00	6.0	121.570	30.53	1.89	0.31450
	12:10:00	7.0	121.843	30.26	2.16	0.30857
	12:11:00	8.0	122.117	29.98	2.43	0.30425
	12:12:00	9.0	122.390	29.71	2.71	0.30078
	12:13:00	10.0	122.635	29.47	2.95	0.29520
	12:14:00	11.0	122.894	29.21	3.21	0.29191
	12:15:00	12.0	123.139	28.96	3.46	0.28800
	12:16:00	13.0	123.384	28.72	3.70	0.28469
	12:17:00	14.0	123.629	28.47	3.95	0.28186
	12:18:00	15.0	123.859	28.24	4.18	0.27840
	12:19:00	16.0	124.090	28.01	4.41	0.27544
	12:20:00	17.0	124.334	27.77	4.65	0.27359
	12:21:00	18.0	124.550	27.55	4.87	0.27039
	12:22:00	19.0	124.781	27.32	5.10	0.26832
	12:23:00	20.0	124.997	27.10	5.31	0.26570
	12:24:00	21.0	125.213	26.89	5.53	0.26333
	12:25:00	22.0	125.400	26.70	5.72	0.25986
	12:26:00	23.0	125.616	26.48	5.93	0.25796
	12:27:00	24.0	125.818	26.28	6.13	0.25563
	12:28:00	25.0	126.019	26.08	6.34	0.25344
	12:29:00	26.0	126.206	25.89	6.52	0.25088
	12:30:00	27.0	126.408	25.69	6.72	0.24907
	12:31:00	28.0	126.610	25.49	6.93	0.24739
	12:32:00	29.0	126.797	25.30	7.11	0.24531
	12:33:00	30.0	126.984	25.12	7.30	0.24337

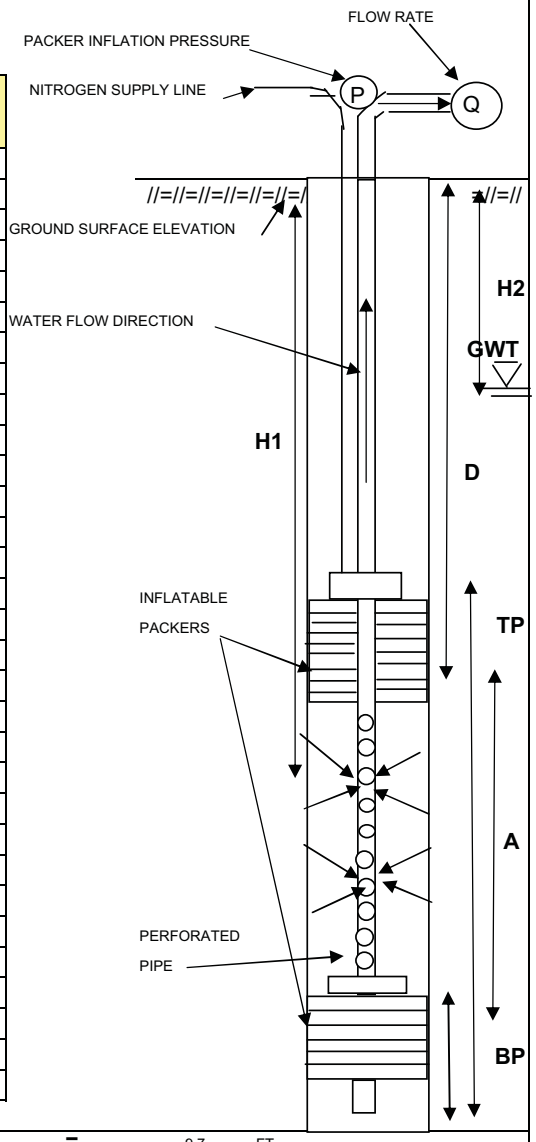

LEGEND:				
	A - TOTAL LENGTH OF TEST SECTION (FT)	=	9.7	FT
	TP - TOTAL LENGTH OF TOP PACKER AND ASSEMBLY	=	15.7	FT
	BP - TOTAL LENGTH OF BOTTOM PACKER AND ASSEMBLY	=	4.65	FT
	D - DISTANCE BETWEEN GROUND SURFACE AND TOP OF THE TEST ZONE	=	145.0	FT
	PIP - PACKER INFLATION PRESSURE (D PSI **+ 50 PSI**)	=	180	PSI
	H1- DISTANCE BETWEEN WATER PRESSURE GAUGE AND GROUND SURFACE	=	152.1	FT
	H2- DISTANCE BETWEEN GROUND SURFACE AND GROUND WATER TABLE	=	13.6	FT

GZA

BORING NO. /TEST NO. MW-63 T10

PACKER TEST LOG

GZA GEOENVIRONMENTAL OF NEW YORK 440 NINTH AVENUE, 18th FLOOR NEW YORK, NEW YORK 10001 SCIENTISTS AND ENGINEERS	Client Entergy Indian Point Energy Cente Buchanan, NY	BORING NO./TEST NO.	MW-63 T11
		SHEET	1 of 1
		FILE NO.	41.0017869.01
		PROJECT LOCATION	Indian Point

CONTRACTOR	Aquifer Drilling & Testing, Inc.	BORING COORDINATES	N 462970.4209	E 604251.2759	
FOREMAN	Ed Borner	GROUND SURFACE EL.(FT)	14.178	DATUM	NGVD 29
GZA ENG.	Sara Covelli	FINAL BORING DEPTH (FT)	201	DATE START/END	11/10/06
DIAMETER OF DRILLED BOREHOLE	3.83 INCH	GROUND WATER DEPTH (STATIC WATER LEVEL DEPTH)	13.2 (below grade)		1.83 FT ground to casing
I.D. OF DRILLING RODS	2 INCH				

TESTED INTERVAL FROM / TO (FT)	TIME (HR:MIN)	ELAPSED TIME (Δt MIN)	DEPTH UNDER WATER (FT)	DEPTH TO WATER (FT)	CUMULATIVE RECOVERY (ΔH FT)	RECOVERY RATE (ΔH/Δt)
155.0-164.7'	10:54:00	0.0	125.861	35.14	0.00	-
L= 9.7 ft	10:55:00	1.0	128.986	32.01	3.12	3.12500
	10:56:00	2.0	131.665	29.34	5.80	2.90200
	10:57:00	3.0	134.042	26.96	8.18	2.72700
	10:58:00	4.0	136.101	24.90	10.24	2.56000
	10:59:00	5.0	137.859	23.14	12.00	2.39960
	11:00:00	6.0	139.429	21.57	13.57	2.26133
	11:01:00	7.0	140.798	20.20	14.94	2.13386
	11:02:00	8.0	141.979	19.02	16.12	2.01475
	11:03:00	9.0	143.002	18.00	17.14	1.90456
	11:04:00	10.0	143.910	17.09	18.05	1.80490
	11:05:00	11.0	144.674	16.33	18.81	1.71027
	11:06:00	12.0	145.308	15.69	19.45	1.62058
	11:07:00	13.0	145.870	15.13	20.01	1.53915
	11:08:00	14.0	146.331	14.67	20.47	1.46214
	11:09:00	15.0	146.734	14.27	20.87	1.39153
	11:10:00	16.0	147.066	13.93	21.21	1.32531
	11:11:00	17.0	147.340	13.66	21.48	1.26347
	11:12:00	18.0	147.585	13.42	21.72	1.20689
	11:13:00	19.0	147.772	13.23	21.91	1.15321
	11:14:00	20.0	147.945	13.06	22.08	1.10420
	11:15:00	21.0	148.075	12.93	22.21	1.05781

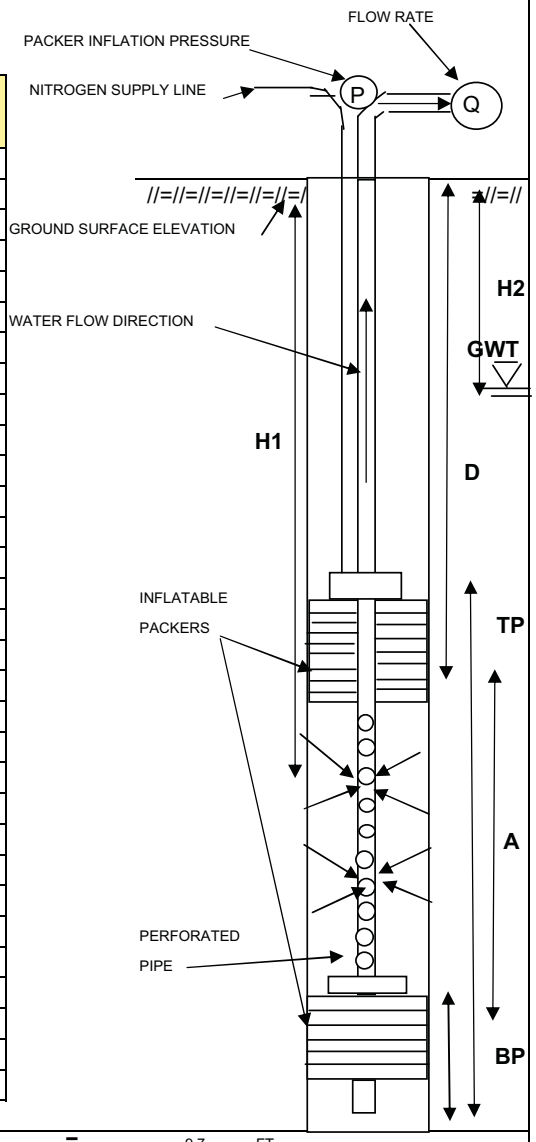

LEGEND:				
	A - TOTAL LENGTH OF TEST SECTION (FT)	=	9.7	FT
	TP - TOTAL LENGTH OF TOP PACKER AND ASSEMBLY	=	15.7	FT
	BP - TOTAL LENGTH OF BOTTOM PACKER AND ASSEMBLY	=	4.65	FT
	D - DISTANCE BETWEEN GROUND SURFACE AND TOP OF THE TEST ZONE	=	155.0	FT
	PIP - PACKER INFLATION PRESSURE (D PSI **+ 50 PSI**)	=	180	PSI
	H1- DISTANCE BETWEEN WATER PRESSURE GAUGE AND GROUND SURFACE	=	161.0	FT
	H2- DISTANCE BETWEEN GROUND SURFACE AND GROUND WATER TABLE	=	13.2	FT

GZA

BORING NO. /TEST NO. MW-63 T11

PACKER TEST LOG

GZA GEOENVIRONMENTAL OF NEW YORK 440 NINTH AVENUE, 18th FLOOR NEW YORK, NEW YORK 10001 SCIENTISTS AND ENGINEERS	Client Entergy Indian Point Energy Cente Buchanan, NY	BORING NO./TEST NO.	MW-63 T12
		SHEET	1 of 1
		FILE NO.	41.0017869.01
		PROJECT LOCATION	Indian Point

CONTRACTOR	Aquifer Drilling & Testing, Inc.	BORING COORDINATES	N 462970.4209	E 604251.2759	
FOREMAN	Ed Borner	GROUND SURFACE EL.(FT)	14.178	DATUM	NGVD 29
GZA ENG.	Sara Covelli	FINAL BORING DEPTH (FT)	201	DATE START/END	11/10/06
DIAMETER OF DRILLED BOREHOLE	3.83 INCH	GROUND WATER DEPTH (STATIC WATER LEVEL DEPTH)	13.12 (below grade)		1.83 FT ground to casing
I.D. OF DRILLING RODS	2 INCH				

TESTED INTERVAL FROM / TO (FT)	TIME (HR:MIN)	ELAPSED TIME (Δt MIN)	DEPTH UNDER WATER (FT)	DEPTH TO WATER (FT)	CUMULATIVE RECOVERY (ΔH FT)	RECOVERY RATE (ΔH/Δt)
165.0-174.7'	9:13:00	0.0	138.478	32.42	0.00	-
L= 9.7 ft	9:14:00	1.0	140.884	30.02	2.41	2.40600
	9:15:00	2.0	143.017	27.88	4.54	2.26950
	9:16:00	3.0	144.919	25.98	6.44	2.14700
	9:17:00	4.0	146.576	24.32	8.10	2.02450
	9:18:00	5.0	148.060	22.84	9.58	1.91640
	9:19:00	6.0	149.357	21.54	10.88	1.81317
	9:20:00	7.0	150.496	20.40	12.02	1.71686
	9:21:00	8.0	151.490	19.41	13.01	1.62650
	9:22:00	9.0	152.398	18.50	13.92	1.54667
	9:23:00	10.0	153.148	17.75	14.67	1.46700
	9:24:00	11.0	153.825	17.08	15.35	1.39518
	9:25:00	12.0	154.416	16.48	15.94	1.32817
	9:26:00	13.0	154.906	15.99	16.43	1.26369
	9:27:00	14.0	155.353	15.55	16.88	1.20536
	9:28:00	15.0	155.728	15.17	17.25	1.15000
	9:29:00	16.0	156.074	14.83	17.60	1.09975
	9:30:00	17.0	156.333	14.57	17.86	1.05029
	9:31:00	18.0	156.578	14.32	18.10	1.00556
	9:32:00	19.0	156.794	14.11	18.32	0.96400
	9:33:00	20.0	156.967	13.93	18.49	0.92445
	9:34:00	21.0	157.126	13.77	18.65	0.88800
	9:35:00	22.0	157.256	13.64	18.78	0.85355
	9:36:00	23.0	157.371	13.53	18.89	0.82143
	9:37:00	24.0	157.472	13.43	18.99	0.79142
	9:38:00	25.0	157.558	13.34	19.08	0.76320
	9:39:00	26.0	157.645	13.26	19.17	0.73719
	9:40:00	27.0	157.688	13.21	19.21	0.71148
	9:41:00	28.0	157.746	13.15	19.27	0.68814
	9:42:00	29.0	157.789	13.11	19.31	0.66590
	9:43:00	30.0	157.818	13.08	19.34	0.64467

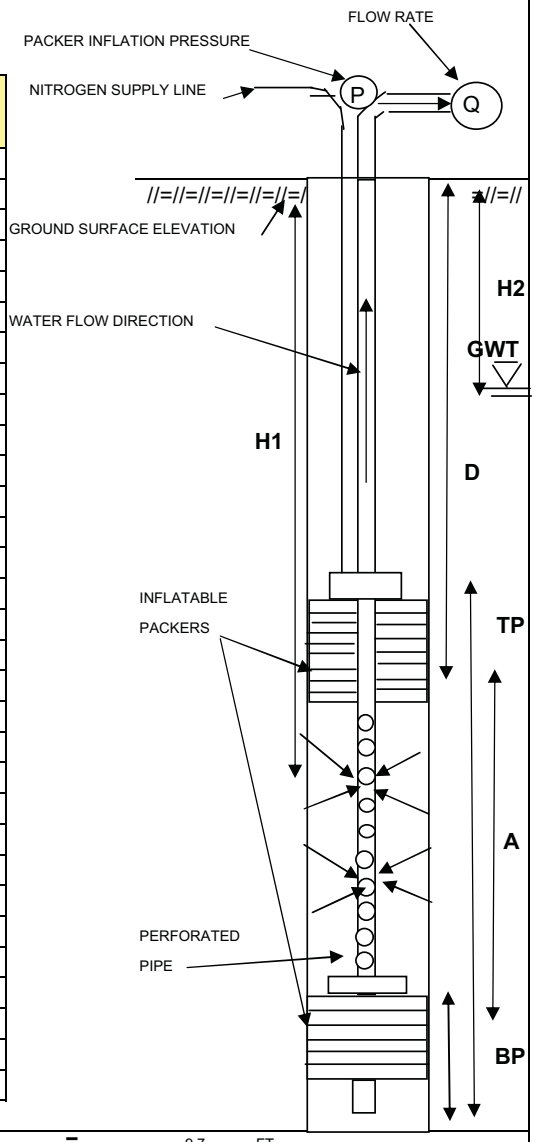

LEGEND:				
	A - TOTAL LENGTH OF TEST SECTION (FT)	=	9.7	FT
	TP - TOTAL LENGTH OF TOP PACKER AND ASSEMBLY	=	15.7	FT
	BP - TOTAL LENGTH OF BOTTOM PACKER AND ASSEMBLY	=	4.65	FT
	D - DISTANCE BETWEEN GROUND SURFACE AND TOP OF THE TEST ZONE	=	165.0	FT
	PIP - PACKER INFLATION PRESSURE (D PSI **+ 50 PSI**)	=	180	PSI
	H1- DISTANCE BETWEEN WATER PRESSURE GAUGE AND GROUND SURFACE	=	170.9	FT
	H2- DISTANCE BETWEEN GROUND SURFACE AND GROUND WATER TABLE	=	13.12	FT

GZA

BORING NO. /TEST NO. MW-63 T12

PACKER TEST LOG

GZA GEOENVIRONMENTAL OF NEW YORK 440 NINTH AVENUE, 18th FLOOR NEW YORK, NEW YORK 10001 SCIENTISTS AND ENGINEERS	Client Entergy Indian Point Energy Cente Buchanan, NY	BORING NO./TEST NO.	MW-63 T13
		SHEET	1 of 1
		FILE NO.	41.0017869.01
		PROJECT LOCATION	Indian Point

CONTRACTOR	Aquifer Drilling & Testing, Inc.	BORING COORDINATES	N 462970.4209	E 604251.2759	
FOREMAN	Ed Borner	GROUND SURFACE EL.(FT)	14.178	DATUM	NGVD 29
GZA ENG.	Sara Covelli	FINAL BORING DEPTH (FT)	201	DATE START/END	11/9/06
DIAMETER OF DRILLED BOREHOLE	3.83 INCH	GROUND WATER DEPTH (STATIC WATER LEVEL DEPTH)	10.28 (below grade)	1.83 FT ground to casing	
I.D. OF DRILLING RODS	2 INCH				

TESTED INTERVAL FROM / TO (FT)	TIME (HR:MIN)	ELAPSED TIME (Δt MIN)	DEPTH UNDER WATER (FT)	DEPTH TO WATER (FT)	CUMULATIVE RECOVERY (ΔH FT)	RECOVERY RATE (ΔH/Δt)
175.0-201 (bottom)	14:34:30	0.0	150.683	30.32	0.00	-
L= 26.0 ft	14:35:00	0.5	154.719	26.28	4.04	8.07200
	14:35:30	1.0	158.337	22.66	7.65	7.65400
	14:36:00	1.5	160.932	20.07	10.25	6.83267
	14:36:30	2.0	162.864	18.14	12.18	6.09050
	14:37:00	2.5	164.305	16.70	13.62	5.44880
	14:37:30	3.0	165.387	15.61	14.70	4.90133
	14:38:00	3.5	166.223	14.78	15.54	4.44000
	14:38:30	4.0	166.843	14.16	16.16	4.04000
	14:39:00	4.5	167.362	13.64	16.68	3.70644
	14:39:30	5.0	167.680	13.32	17.00	3.39940
	14:40:00	5.5	168.011	12.99	17.33	3.15055
	14:40:30	6.0	168.285	12.72	17.60	2.93367
	14:41:00	6.5	168.487	12.51	17.80	2.73908
	14:41:30	7.0	168.660	12.34	17.98	2.56814
	14:42:00	7.5	168.790	12.21	18.11	2.41427
	14:42:30	8.0	168.905	12.10	18.22	2.27775
	14:43:00	8.5	169.021	11.98	18.34	2.15741
	14:43:30	9.0	169.107	11.89	18.42	2.04711
	14:44:00	10.5	169.179	11.82	18.50	1.76152
	14:45:00	11.5	169.280	11.72	18.60	1.61713
	14:46:00	12.5	169.381	11.62	18.70	1.49584
	14:47:00	13.5	169.439	11.56	18.76	1.38933
	14:48:00	14.5	168.482	12.52	17.80	1.22752
	14:49:00	15.5	169.525	11.48	18.84	1.21561

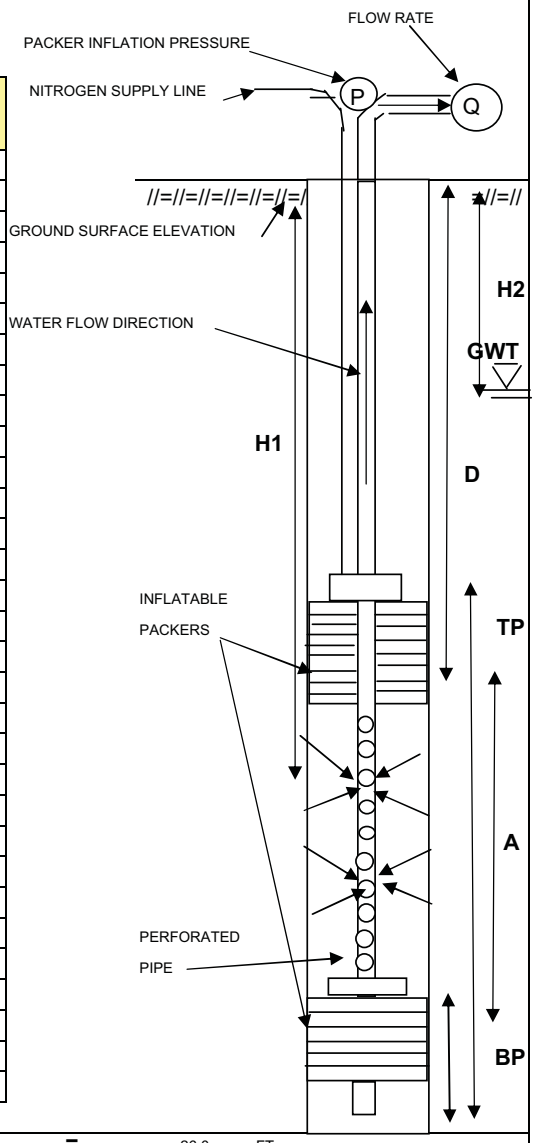

LEGEND:				
A - TOTAL LENGTH OF TEST SECTION (FT)	=	26.0	FT
TP - TOTAL LENGTH OF TOP PACKER AND ASSEMBLY	=	15.7	FT
BP - TOTAL LENGTH OF BOTTOM PACKER AND ASSEMBLY	=	4.65	FT
D - DISTANCE BETWEEN GROUND SURFACE AND TOP OF THE TEST ZONE	=	175.0	FT
PIP - PACKER INFLATION PRESSURE (D PSI **+ 50 PSI**)	=	180	PSI
H1- DISTANCE BETWEEN WATER PRESSURE GAUGE AND GROUND SURFACE	=	181.0	FT
H2- DISTANCE BETWEEN GROUND SURFACE AND GROUND WATER TABLE	=	10.28	FT

NOTE: Only the top packer was inflated for this test. The interval tested here may be considered from 175.0' b/g to bottom of well.

PACKER TEST LOG

GZA GEOENVIRONMENTAL OF NEW YORK 440 NINTH AVENUE, 18th FLOOR NEW YORK, NEW YORK 10001 SCIENTISTS AND ENGINEERS	Client Entergy Indian Point Energy Cente Buchanan, NY	BORING NO./TEST NO.	MW-66 T1
		SHEET	1 of 1
		FILE NO.	41.0017869.01
		PROJECT LOCATION	Indian Point

CONTRACTOR	Aquifer Drilling & Testing, Inc.	BORING COORDINATES	N 463147.3648	E 604409.1969	
FOREMAN	Dave Carter	GROUND SURFACE EL.(FT)	14.021	DATUM	NGVD 29
GZA ENG.	Sara Covelli	FINAL BORING DEPTH (FT)	200	DATE START/END	1/4/07
DIAMETER OF DRILLED BOREHOLE	3.83 INCH	GROUND WATER DEPTH (STATIC WATER LEVEL DEPTH)	11.86 (below grade)	1.87 FT ground to casing	
I.D. OF DRILLING RODS	2 INCH				

TESTED INTERVAL FROM / TO (FT)	TIME (HR:MIN)	ELAPSED TIME (Δt MIN)	DEPTH UNDER WATER (FT)	DEPTH TO WATER (FT)	CUMULATIVE RECOVERY (ΔH FT)	RECOVERY RATE (ΔH/Δt)
182.0-200'	14:00:00	0.0	142.152	44.78	0.00	-
L= 18.0 ft	14:01:00	1.0	149.040	37.90	6.89	6.88800
	14:02:00	2.0	154.632	32.30	12.48	6.24000
	14:03:00	3.0	159.144	27.79	16.99	5.66400
	14:04:00	4.0	162.705	24.23	20.55	5.13825
	14:05:00	5.0	165.517	21.42	23.37	4.67300
	14:06:00	6.0	167.752	19.18	25.60	4.26667
	14:07:00	7.0	169.453	17.48	27.30	3.90014
	14:08:00	8.0	170.809	16.13	28.66	3.58213
	14:09:00	9.0	171.847	15.09	29.70	3.29944
	14:10:00	10.0	172.640	14.30	30.49	3.04880
	14:11:00	11.0	173.232	13.70	31.08	2.82545
	14:12:00	12.0	173.664	13.27	31.51	2.62600
	14:13:00	13.0	173.982	12.95	31.83	2.44846
	14:14:00	14.0	174.227	12.71	32.08	2.29107
	14:15:00	15.0	174.414	12.52	32.26	2.15080
	14:16:00	16.0	174.530	12.41	32.38	2.02363
	14:17:00	17.0	174.645	12.29	32.49	1.91135
	14:18:00	18.0	174.717	12.22	32.57	1.80917
	14:19:00	19.0	174.775	12.16	32.62	1.71700

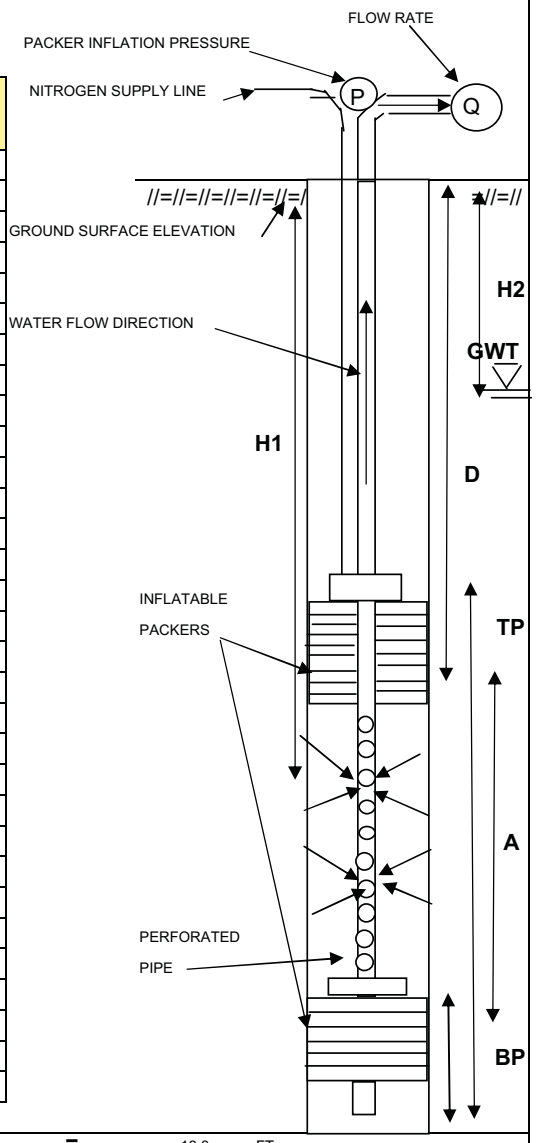

LEGEND:				
	A - TOTAL LENGTH OF TEST SECTION (FT)	=	18.0	FT
	TP - TOTAL LENGTH OF TOP PACKER AND ASSEMBLY	=	15.7	FT
	BP - TOTAL LENGTH OF BOTTOM PACKER AND ASSEMBLY	=	4.65	FT
	D - DISTANCE BETWEEN GROUND SURFACE AND TOP OF THE TEST ZONE	=	182.0	FT
	PIP - PACKER INFLATION PRESSURE (D PSI **+ 50 PSI**)	=	180	PSI
	H1- DISTANCE BETWEEN WATER PRESSURE GAUGE AND GROUND SURFACE	=	186.9	FT
	H2- DISTANCE BETWEEN GROUND SURFACE AND GROUND WATER TABLE	=	11.86	FT

NOTE: Only the top packer was inflated for this test. The interval tested here may be considered from 182.0' b/g to bottom of well.

GZA

BORING NO. /TEST NO. MW-66 T1

PACKER TEST LOG

GZA GEOENVIRONMENTAL OF NEW YORK 440 NINTH AVENUE, 18th FLOOR NEW YORK, NEW YORK 10001 SCIENTISTS AND ENGINEERS	Client Entergy Indian Point Energy Cente Buchanan, NY	BORING NO./TEST NO.	MW-66 T2
		SHEET	1 of 1
		FILE NO.	41.0017869.01
		PROJECT LOCATION	Indian Point

CONTRACTOR	Aquifer Drilling & Testing, Inc.	BORING COORDINATES	N 463147.3648	E 604409.1969	
FOREMAN	Dave Carter	GROUND SURFACE EL.(FT)	14.021	DATUM	NGVD 29
GZA ENG.	Sara Covelli	FINAL BORING DEPTH (FT)	200	DATE START/END	1/4/07
DIAMETER OF DRILLED BOREHOLE	3.83 INCH	GROUND WATER DEPTH (STATIC WATER LEVEL DEPTH)	12.50 (below grade)		1.87 FT ground to casing
I.D. OF DRILLING RODS	2 INCH				

TESTED INTERVAL FROM / TO (FT)	TIME (HR:MIN)	ELAPSED TIME (Δt MIN)	DEPTH UNDER WATER (FT)	DEPTH TO WATER (FT)	CUMULATIVE RECOVERY (ΔH FT)	RECOVERY RATE (ΔH/Δt)
172.3-182.0	15:15:00	0.0	139.343	38.13	0.00	-
L= 9.7 ft	15:16:00	1.0	141.173	36.30	1.83	1.83000
	15:17:00	2.0	142.830	34.64	3.49	1.74350
	15:18:00	3.0	144.371	33.10	5.03	1.67600
	15:19:00	4.0	145.812	31.66	6.47	1.61725
	15:20:00	5.0	147.138	30.33	7.80	1.55900
	15:21:00	6.0	148.363	29.11	9.02	1.50333
	15:22:00	7.0	149.530	27.94	10.19	1.45529
	15:23:00	8.0	150.597	26.87	11.25	1.40675
	15:24:00	9.0	151.591	25.88	12.25	1.36089
	15:25:00	10.0	152.528	24.94	13.19	1.31850
	15:26:00	11.0	153.378	24.09	14.04	1.27591
	15:27:00	12.0	154.185	23.29	14.84	1.23683
	15:28:00	13.0	154.935	22.54	15.59	1.19938
	15:29:00	14.0	155.641	21.83	16.30	1.16414
	15:30:00	15.0	156.276	21.19	16.93	1.12887
	15:31:00	16.0	156.881	20.59	17.54	1.09613
	15:32:00	17.0	157.443	20.03	18.10	1.06471
	15:33:00	18.0	157.962	19.51	18.62	1.03439
	15:34:00	19.0	158.452	19.02	19.11	1.00574
	15:35:00	20.0	158.899	18.57	19.56	0.97780
	15:36:00	21.0	159.317	18.15	19.97	0.95114
	15:37:00	22.0	159.721	17.75	20.38	0.92627
	15:38:00	23.0	160.081	17.39	20.74	0.90165
	15:39:00	24.0	160.413	17.06	21.07	0.87792
	15:40:00	25.0	160.716	16.75	21.37	0.85492
	15:41:00	26.0	161.004	16.47	21.66	0.83312
	15:42:00	27.0	161.278	16.19	21.94	0.81241
	15:43:00	28.0	161.523	15.95	22.18	0.79214
	15:44:00	29.0	161.754	15.72	22.41	0.77279
	15:45:00	30.0	161.970	15.50	22.63	0.75423

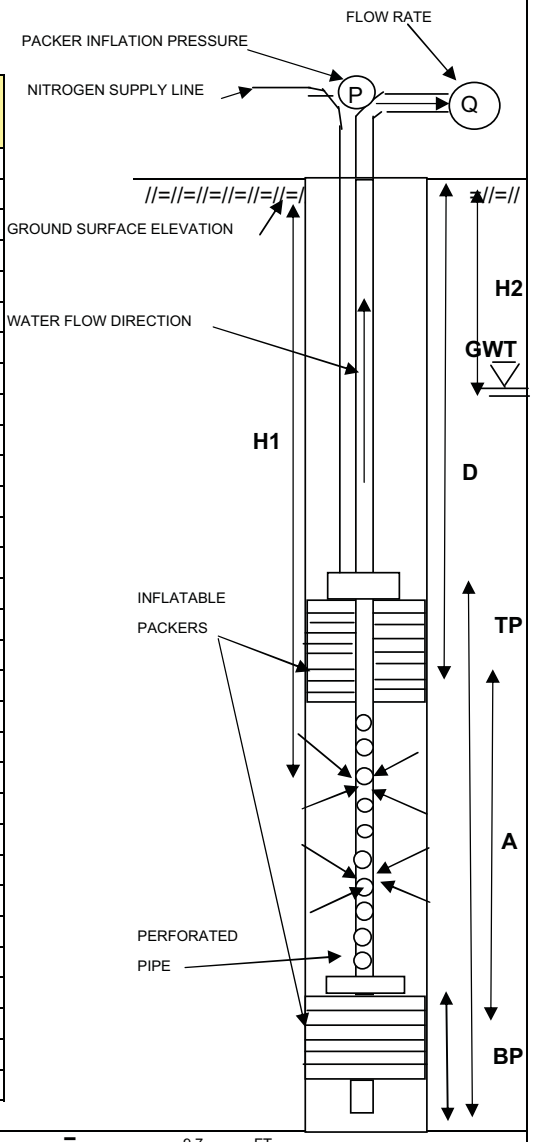

LEGEND:				
	A - TOTAL LENGTH OF TEST SECTION (FT)	=	9.7	FT
	TP - TOTAL LENGTH OF TOP PACKER AND ASSEMBLY	=	15.7	FT
	BP - TOTAL LENGTH OF BOTTOM PACKER AND ASSEMBLY	=	4.65	FT
	D - DISTANCE BETWEEN GROUND SURFACE AND TOP OF THE TEST ZONE	=	172.3	FT
	PIP - PACKER INFLATION PRESSURE (D PSI **+ 50 PSI**)	=	180	PSI
	H1- DISTANCE BETWEEN WATER PRESSURE GAUGE AND GROUND SURFACE	=	177.5	FT
	H2- DISTANCE BETWEEN GROUND SURFACE AND GROUND WATER TABLE	=	12.50	FT

GZA

BORING NO. /TEST NO. MW-66 T2

PACKER TEST LOG

GZA GEOENVIRONMENTAL OF NEW YORK 440 NINTH AVENUE, 18th FLOOR NEW YORK, NEW YORK 10001 SCIENTISTS AND ENGINEERS	Client Entergy Indian Point Energy Cente Buchanan, NY	BORING NO./TEST NO.	MW-66 T3
		SHEET	1 of 1
		FILE NO.	41.0017869.01
		PROJECT LOCATION	Indian Point

CONTRACTOR	Aquifer Drilling & Testing, Inc.	BORING COORDINATES	N 463147.3648	E 604409.1969	
FOREMAN	Dave Carter	GROUND SURFACE EL.(FT)	14.021	DATUM	NGVD 29
GZA ENG.	Sara Covelli	FINAL BORING DEPTH (FT)	200	DATE START/END	1/4/07
DIAMETER OF DRILLED BOREHOLE	3.83 INCH	GROUND WATER DEPTH (STATIC WATER LEVEL DEPTH)	13.01 (below grade)	1.87 FT ground to casing	
I.D. OF DRILLING RODS	2 INCH				

TESTED INTERVAL FROM / TO (FT)	TIME (HR:MIN)	ELAPSED TIME (Δt MIN)	DEPTH UNDER WATER (FT)	DEPTH TO WATER (FT)	CUMULATIVE RECOVERY (ΔH FT)	RECOVERY RATE (ΔH/Δt)
162.3-172.0	16:37:00	0.0	130.052	37.45	0.00	-
L= 9.7 ft	16:38:00	1.0	131.622	35.88	1.57	1.57000
	16:39:00	2.0	133.033	34.47	2.98	1.49050
	16:40:00	3.0	134.373	33.13	4.32	1.44033
	16:41:00	4.0	135.583	31.92	5.53	1.38275
	16:42:00	5.0	136.894	30.61	6.84	1.36840
	16:43:00	6.0	137.801	29.70	7.75	1.29150
	16:44:00	7.0	138.810	28.69	8.76	1.25114
	16:45:00	8.0	139.746	27.75	9.69	1.21175
	16:46:00	9.0	140.668	26.83	10.62	1.17956
	16:47:00	10.0	141.504	26.00	11.45	1.14520
	16:48:00	11.0	142.311	25.19	12.26	1.11445
	16:49:00	12.0	143.046	24.45	12.99	1.08283
	16:50:00	13.0	143.780	23.72	13.73	1.05600
	16:51:00	14.0	144.429	23.07	14.38	1.02693
	16:52:00	15.0	145.048	22.45	15.00	0.99973
	16:53:00	16.0	145.639	21.86	15.59	0.97419
	16:54:00	17.0	146.201	21.30	16.15	0.94994
	16:55:00	18.0	146.706	20.79	16.65	0.92522
	16:56:00	19.0	147.196	20.30	17.14	0.90232
	16:57:00	20.0	147.657	19.84	17.61	0.88025
	16:58:00	21.0	148.118	19.38	18.07	0.86029
	16:59:00	22.0	148.521	18.98	18.47	0.83950
	17:00:00	23.0	148.882	18.62	18.83	0.81870
	17:01:00	24.0	149.228	18.27	19.18	0.79900
	17:02:00	25.0	149.559	17.94	19.51	0.78028
	17:03:00	26.0	149.862	17.64	19.81	0.76192
	17:04:00	27.0	150.179	17.32	20.13	0.74544
	17:05:00	28.0	150.438	17.06	20.39	0.72807
	17:06:00	29.0	150.683	16.82	20.63	0.71141
	17:07:00	30.0	150.943	16.56	20.89	0.69637

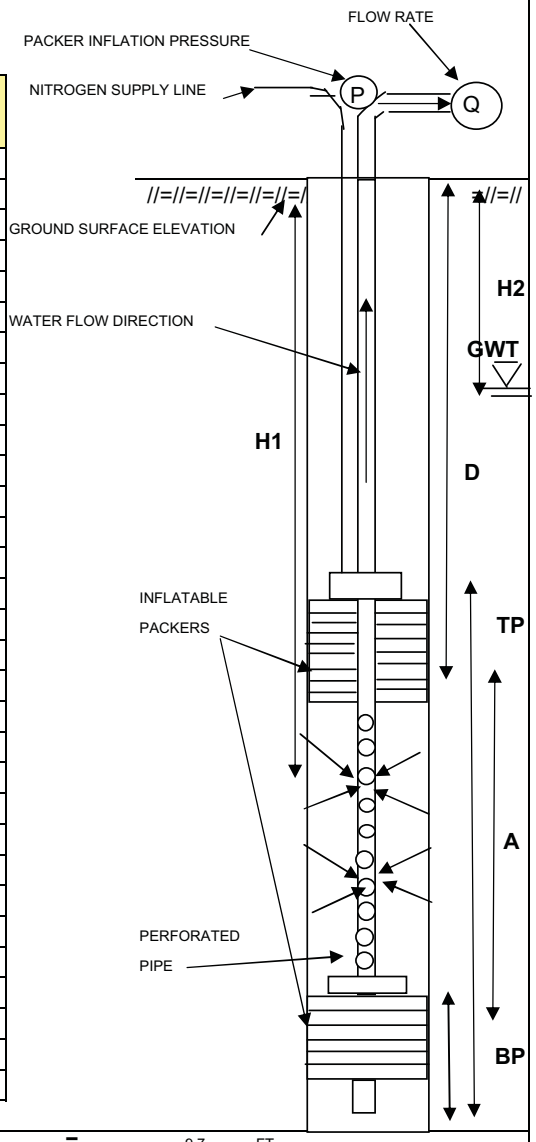

LEGEND:				
	A - TOTAL LENGTH OF TEST SECTION (FT)	=	9.7	FT
	TP - TOTAL LENGTH OF TOP PACKER AND ASSEMBLY	=	15.7	FT
	BP - TOTAL LENGTH OF BOTTOM PACKER AND ASSEMBLY	=	4.65	FT
	D - DISTANCE BETWEEN GROUND SURFACE AND TOP OF THE TEST ZONE	=	162.3	FT
	PIP - PACKER INFLATION PRESSURE (D PSI **+ 50 PSI**)	=	180	PSI
	H1- DISTANCE BETWEEN WATER PRESSURE GAUGE AND GROUND SURFACE	=	167.5	FT
	H2- DISTANCE BETWEEN GROUND SURFACE AND GROUND WATER TABLE	=	13.01	FT

GZA

BORING NO. /TEST NO. MW-66 T3

PACKER TEST LOG

GZA GEOENVIRONMENTAL OF NEW YORK 440 NINTH AVENUE, 18th FLOOR NEW YORK, NEW YORK 10001 SCIENTISTS AND ENGINEERS	Client Entergy Indian Point Energy Cente Buchanan, NY	BORING NO./TEST NO.	MW-66 T4
		SHEET	1 of 1
		FILE NO.	41.0017869.01
		PROJECT LOCATION	Indian Point

CONTRACTOR	Aquifer Drilling & Testing, Inc.	BORING COORDINATES	N 463147.3648	E 604409.1969	
FOREMAN	Dave Carter	GROUND SURFACE EL.(FT)	14.021	DATUM	NGVD 29
GZA ENG.	Sara Covelli	FINAL BORING DEPTH (FT)	200	DATE START/END	1/5/07
DIAMETER OF DRILLED BOREHOLE	3.83 INCH	GROUND WATER DEPTH (STATIC WATER LEVEL DEPTH)	13.15 (below grade)		1.87 FT ground to casing
I.D. OF DRILLING RODS	2 INCH				

TESTED INTERVAL FROM / TO (FT)	TIME (HR:MIN)	ELAPSED TIME (Δt MIN)	DEPTH UNDER WATER (FT)	DEPTH TO WATER (FT)	CUMULATIVE RECOVERY (ΔH FT)	RECOVERY RATE (ΔH/Δt)
152.3-162.0	8:45:00	0.0	122.707	34.73	0.00	-
L= 9.7 ft	8:46:00	1.0	123.787	33.65	1.08	1.08000
	8:47:00	2.0	124.781	32.66	2.07	1.03700
	8:48:00	3.0	125.702	31.74	3.00	0.99833
	8:49:00	4.0	126.566	30.88	3.86	0.96475
	8:50:00	5.0	127.402	30.04	4.70	0.93900
	8:51:00	6.0	128.208	29.23	5.50	0.91683
	8:52:00	7.0	128.971	28.47	6.26	0.89486
	8:53:00	8.0	129.821	27.62	7.11	0.88925
	8:54:00	9.0	130.412	27.03	7.71	0.85611
	8:55:00	10.0	131.074	26.37	8.37	0.83670
	8:56:00	11.0	131.722	25.72	9.02	0.81955
	8:57:00	12.0	132.342	25.10	9.64	0.80292
	8:58:00	13.0	132.932	24.51	10.23	0.78654
	8:59:00	14.0	133.494	23.95	10.79	0.77050
	9:00:00	15.0	134.027	23.41	11.32	0.75467
	9:01:00	16.0	134.546	22.90	11.84	0.73994
	9:02:00	17.0	135.035	22.41	12.33	0.72518
	9:03:00	18.0	135.482	21.96	12.78	0.70972
	9:04:00	19.0	135.929	21.51	13.22	0.69589
	9:05:00	20.0	136.361	21.08	13.65	0.68270
	9:06:00	21.0	136.764	20.68	14.06	0.66938
	9:07:00	22.0	137.153	20.29	14.45	0.65664
	9:08:00	23.0	137.528	19.91	14.82	0.64439
	9:09:00	24.0	137.873	19.57	15.17	0.63192
	9:10:00	25.0	138.219	19.22	15.51	0.62048
	9:12:00	27.0	138.839	18.60	16.13	0.59748
	9:14:00	29.0	139.429	18.01	16.72	0.57662
	9:16:00	31.0	139.948	17.49	17.24	0.55616
	9:18:00	33.0	140.438	17.00	17.73	0.53730
	9:20:00	35.0	140.884	16.56	18.18	0.51934

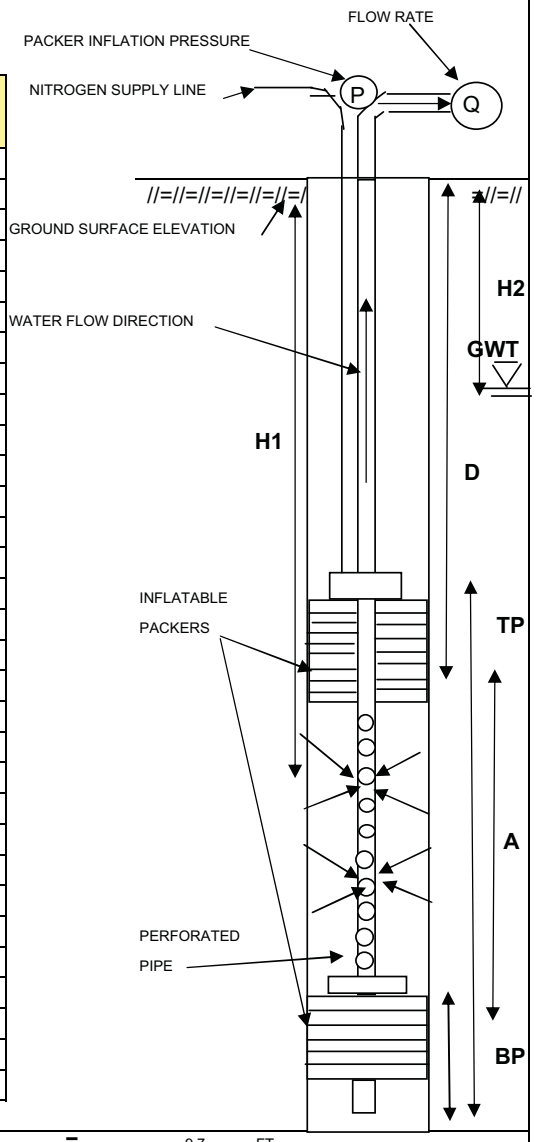

LEGEND:				
	A - TOTAL LENGTH OF TEST SECTION (FT)	=	9.7	FT
	TP - TOTAL LENGTH OF TOP PACKER AND ASSEMBLY	=	15.7	FT
	BP - TOTAL LENGTH OF BOTTOM PACKER AND ASSEMBLY	=	4.65	FT
	D - DISTANCE BETWEEN GROUND SURFACE AND TOP OF THE TEST ZONE	=	152.3	FT
	PIP - PACKER INFLATION PRESSURE (D PSI **+ 50 PSI**)	=	180	PSI
	H1- DISTANCE BETWEEN WATER PRESSURE GAUGE AND GROUND SURFACE	=	157.4	FT
	H2- DISTANCE BETWEEN GROUND SURFACE AND GROUND WATER TABLE	=	13.15	FT

GZA

BORING NO. /TEST NO. MW-66 T4

PACKER TEST LOG

GZA GEOENVIRONMENTAL OF NEW YORK 440 NINTH AVENUE, 18th FLOOR NEW YORK, NEW YORK 10001 SCIENTISTS AND ENGINEERS	Client Entergy Indian Point Energy Cente Buchanan, NY	BORING NO./TEST NO.	MW-66 T5
		SHEET	1 of 1
		FILE NO.	41.0017869.01
		PROJECT LOCATION	Indian Point

CONTRACTOR	Aquifer Drilling & Testing, Inc.	BORING COORDINATES	N 463147.3648	E 604409.1969	
FOREMAN	Dave Carter	GROUND SURFACE EL.(FT)	14.021	DATUM	NGVD 29
GZA ENG.	Sara Covelli	FINAL BORING DEPTH (FT)	200	DATE START/END	1/5/07
DIAMETER OF DRILLED BOREHOLE	3.83 INCH	GROUND WATER DEPTH (STATIC WATER LEVEL DEPTH)	12.40 (below grade)		1.87 FT ground to casing
I.D. OF DRILLING RODS	2 INCH				

TESTED INTERVAL FROM / TO (FT)	TIME (HR:MIN)	ELAPSED TIME (Δt MIN)	DEPTH UNDER WATER (FT)	DEPTH TO WATER (FT)	CUMULATIVE RECOVERY (ΔH FT)	RECOVERY RATE (ΔH/Δt)
142.3-152.0'	10:15:00	0.0	113.723	33.72	0.00	-
L= 9.7 ft	10:16:00	1.0	114.270	33.17	0.55	0.54700
	10:17:00	2.0	114.774	32.66	1.05	0.52550
	10:18:00	3.0	115.249	32.19	1.53	0.50867
	10:19:00	4.0	115.710	31.73	1.99	0.49675
	10:20:00	5.0	116.199	31.24	2.48	0.49520
	10:21:00	6.0	116.631	30.81	2.91	0.48467
	10:22:00	7.0	117.077	30.36	3.35	0.47914
	10:23:00	8.0	117.495	29.94	3.77	0.47150
	10:24:00	9.0	117.898	29.54	4.18	0.46389
	10:25:00	10.0	118.301	29.14	4.58	0.45780
	10:26:00	11.0	118.690	28.75	4.97	0.45155
	10:27:00	12.0	119.079	28.36	5.36	0.44633
	10:28:00	13.0	119.439	28.00	5.72	0.43969
	10:29:00	14.0	119.827	27.61	6.10	0.43600
	10:30:00	15.0	120.173	27.27	6.45	0.43000
	10:31:00	16.0	120.533	26.91	6.81	0.42563
	10:32:00	17.0	120.864	26.57	7.14	0.42006
	10:33:00	18.0	121.210	26.23	7.49	0.41594
	10:34:00	19.0	121.541	25.90	7.82	0.41147
	10:35:00	20.0	121.872	25.57	8.15	0.40745
	10:36:00	21.0	122.189	25.25	8.47	0.40314
	10:37:00	22.0	122.506	24.93	8.78	0.39923
	10:38:00	23.0	122.794	24.64	9.07	0.39439
	10:39:00	24.0	123.096	24.34	9.37	0.39054
	10:40:00	25.0	123.384	24.05	9.66	0.38644
	10:41:00	26.0	123.672	23.77	9.95	0.38265
	10:42:00	27.0	123.946	23.49	10.22	0.37863
	10:43:00	28.0	124.219	23.22	10.50	0.37486
	10:44:00	29.0	124.478	22.96	10.76	0.37086
	10:45:00	30.0	124.738	22.70	11.02	0.36717

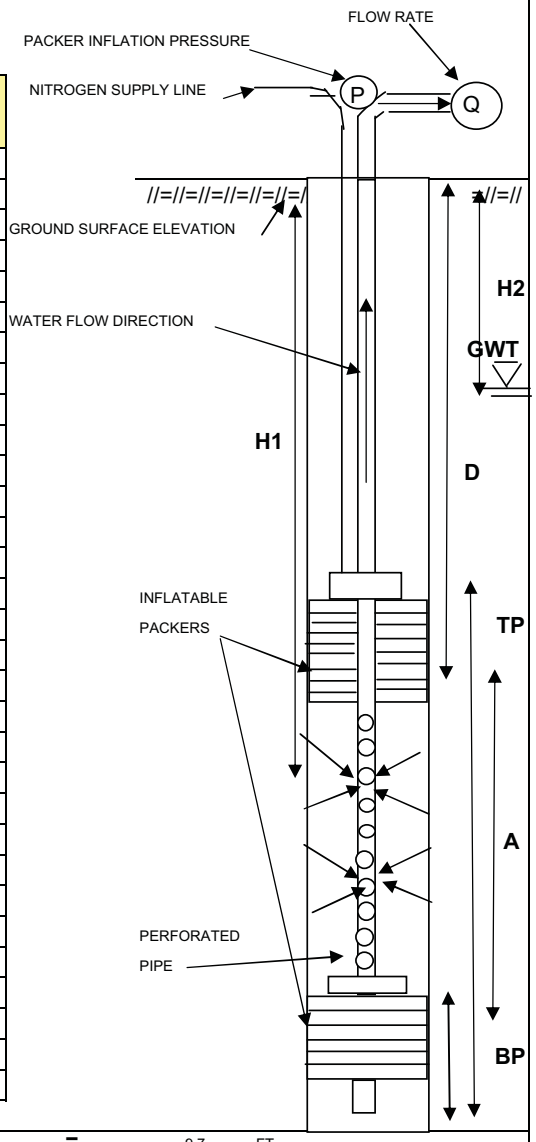

LEGEND:				
	A - TOTAL LENGTH OF TEST SECTION (FT)	=	9.7	FT
	TP - TOTAL LENGTH OF TOP PACKER AND ASSEMBLY	=	15.7	FT
	BP - TOTAL LENGTH OF BOTTOM PACKER AND ASSEMBLY	=	4.65	FT
	D - DISTANCE BETWEEN GROUND SURFACE AND TOP OF THE TEST ZONE	=	142.3	FT
	PIP - PACKER INFLATION PRESSURE (D PSI **+ 50 PSI**)	=	180	PSI
	H1- DISTANCE BETWEEN WATER PRESSURE GAUGE AND GROUND SURFACE	=	147.4	FT
	H2- DISTANCE BETWEEN GROUND SURFACE AND GROUND WATER TABLE	=	12.40	FT

GZA

BORING NO. /TEST NO. MW-66 T5

PACKER TEST LOG

GZA GEOENVIRONMENTAL OF NEW YORK 440 NINTH AVENUE, 18th FLOOR NEW YORK, NEW YORK 10001 SCIENTISTS AND ENGINEERS	Client Entergy Indian Point Energy Cente Buchanan, NY	BORING NO./TEST NO. MW-66 T6 SHEET 1 of 1 FILE NO. 41.0017869.01 PROJECT LOCATION Indian Point

CONTRACTOR	Aquifer Drilling & Testing, Inc.	BORING COORDINATES	N 463147.3648 E 604409.1969
FOREMAN	Dave Carter	GROUND SURFACE EL.(FT)	14.021 DATUM NGVD 29
GZA ENG.	Sara Covelli	FINAL BORING DEPTH (FT)	200 DATE START/END 1/5/07
DIAMETER OF DRILLED BOREHOLE	3.83 INCH	GROUND WATER DEPTH (STATIC WATER LEVEL DEPTH)	12.10 (below grade) 1.87 FT ground to casing
I.D. OF DRILLING RODS	2 INCH		

TESTED INTERVAL FROM / TO (FT)	TIME (HR:MIN:SEC)	ELAPSED TIME (Δt MIN)	DEPTH UNDER WATER (FT)	DEPTH TO WATER (FT)	DRAWDOWN (ΔH FT)	PUMPING RATE (gal/min)	SPECIFIC CAPACITY (gpm/ft)
131.0-140.7'	11:38	0	104.727	31.60	19.498	2.500	0.128
L= 9.7 ft	11:39	1	104.655	31.67	19.57	2.500	0.128
	11:40	2	104.641	31.68	19.584	2.500	0.128
	11:41	3	104.742	31.58	19.483	2.500	0.128
	11:42	4	104.770	31.56	19.455	2.500	0.129
	11:43	5	104.770	31.56	19.455	2.500	0.129
	11:44	6	104.770	31.56	19.455	2.500	0.129
	11:45	7	104.727	31.60	19.498	2.500	0.128
	11:46	8	104.699	31.63	19.526	2.500	0.128
	11:47	9	104.670	31.66	19.555	2.500	0.128
	11:48	10	104.627	31.70	19.598	2.500	0.128
	11:49	11	104.627	31.70	19.598	2.500	0.128
	11:50	12	104.627	31.70	19.598	2.500	0.128
	11:51	13	104.598	31.73	19.627	2.500	0.127
	11:52	14	104.612	31.71	19.613	2.500	0.127
	11:53	15	104.627	31.70	19.598	2.500	0.128
	11:54	16	104.627	31.70	19.598	2.500	0.128
	11:55	17	104.627	31.70	19.598	2.500	0.128
	11:56	18	104.612	31.71	19.613	2.500	0.127
	11:57	19	104.627	31.70	19.598	2.500	0.128
	11:58	20	104.612	31.71	19.613	2.500	0.127
	11:59	21	104.598	31.73	19.627	2.500	0.127
	12:00	22	104.612	31.71	19.613	2.500	0.127
	12:01	23	104.612	31.71	19.613	2.500	0.127
	12:02	24	104.627	31.70	19.598	2.500	0.128
	12:03	25	104.627	31.70	19.598	2.500	0.128
	12:04	26	104.627	31.70	19.598	2.500	0.128
	12:05	27	104.612	31.71	19.613	2.500	0.127
	12:06	28	104.627	31.70	19.598	2.500	0.128
	12:07	29	104.598	31.73	19.627	2.500	0.127
	12:08	30	104.612	31.71	19.613	2.500	0.127
	12:09	31	104.627	31.70	19.598	2.500	0.128

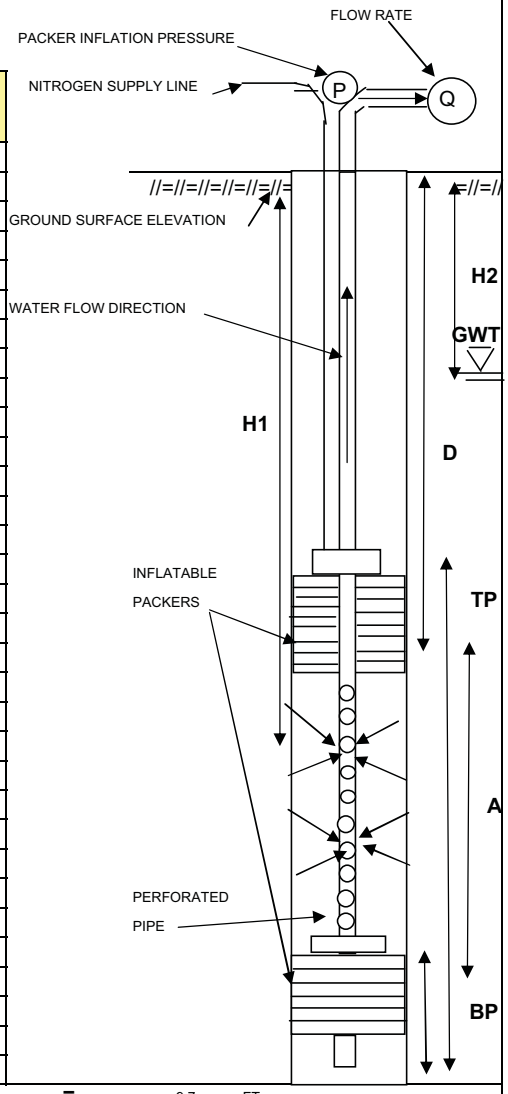

LEGEND:			
A - TOTAL LENGTH OF TEST SECTION (FT)	=	9.7	FT
TP - TOTAL LENGTH OF TOP PACKER AND ASSEMBLY	=	15.7	FT
BP - TOTAL LENGTH OF BOTTOM PACKER AND ASSEMBLY	=	4.65	FT
D - DISTANCE BETWEEN GROUND SURFACE AND TOP OF THE TEST ZONE	=	131.0	FT
PIP - PACKER INFLATION PRESSURE (D PSI + **50 PSI**)	=	170	PSI
H1- DISTANCE BETWEEN WATER PRESSURE GAUGE AND GROUND SURFACE	=	136.325	FT
H2- DISTANCE BETWEEN GROUND SURFACE AND GROUND WATER TABLE	=	12.10	FT

GZA

BORING NO. /TEST NO. MW-66 T6

PACKER TEST LOG

GZA GEOENVIRONMENTAL OF NEW YORK 440 NINTH AVENUE, 18th FLOOR NEW YORK, NEW YORK 10001 SCIENTISTS AND ENGINEERS	Client Entergy Indian Point Energy Cente Buchanan, NY	BORING NO./TEST NO.	MW-66 T7
		SHEET	1 of 1
		FILE NO.	41.0017869.01
		PROJECT LOCATION	Indian Point

CONTRACTOR	Aquifer Drilling & Testing, Inc.	BORING COORDINATES	N 463147.3648	E 604409.1969	
FOREMAN	Dave Carter	GROUND SURFACE EL.(FT)	14.021	DATUM	NGVD 29
GZA ENG.	Sara Covelli	FINAL BORING DEPTH (FT)	200	DATE START/END	1/5/07
DIAMETER OF DRILLED BOREHOLE	3.83 INCH	GROUND WATER DEPTH (STATIC WATER LEVEL DEPTH)	11.35 (below grade)	1.87 FT ground to casing	
I.D. OF DRILLING RODS	2 INCH				

TESTED INTERVAL FROM / TO (FT)	TIME (HR:MIN)	ELAPSED TIME (Δt MIN)	DEPTH UNDER WATER (FT)	DEPTH TO WATER (FT)	CUMULATIVE RECOVERY (ΔH FT)	RECOVERY RATE (ΔH/Δt)
109.0-118.7'	13:42:30	0.0	85.765	28.44	0.00	-
L= 9.7 ft	13:43:00	0.5	88.325	25.88	2.56	5.12000
	13:43:30	1.0	91.447	22.76	5.68	5.68200
	13:44:00	1.5	93.950	20.26	8.19	5.45667
	13:44:30	2.0	95.935	18.27	10.17	5.08500
	13:45:00	2.5	97.504	16.70	11.74	4.69560
	13:45:30	3.0	98.755	15.45	12.99	4.33000
	13:46:00	3.5	99.676	14.53	13.91	3.97457
	13:46:30	4.0	100.381	13.83	14.62	3.65400
	13:47:00	4.5	100.943	13.26	15.18	3.37289
	13:47:30	5.0	101.389	12.82	15.62	3.12480
	13:48:00	5.5	101.720	12.49	15.96	2.90091
	13:48:30	6.0	101.964	12.24	16.20	2.69983
	13:49:00	6.5	102.166	12.04	16.40	2.52323
	13:49:30	7.0	102.295	11.91	16.53	2.36143
	13:50:00	7.5	102.410	11.80	16.65	2.21933
	13:50:30	8.0	102.526	11.68	16.76	2.09513
	13:51:00	8.5	102.569	11.64	16.80	1.97694
	13:51:30	9.0	102.626	11.58	16.86	1.87344
	13:52:00	9.5	102.669	11.54	16.90	1.77937
	13:52:30	10.0	102.713	11.49	16.95	1.69480
	13:53:00	10.5	102.727	11.48	16.96	1.61543

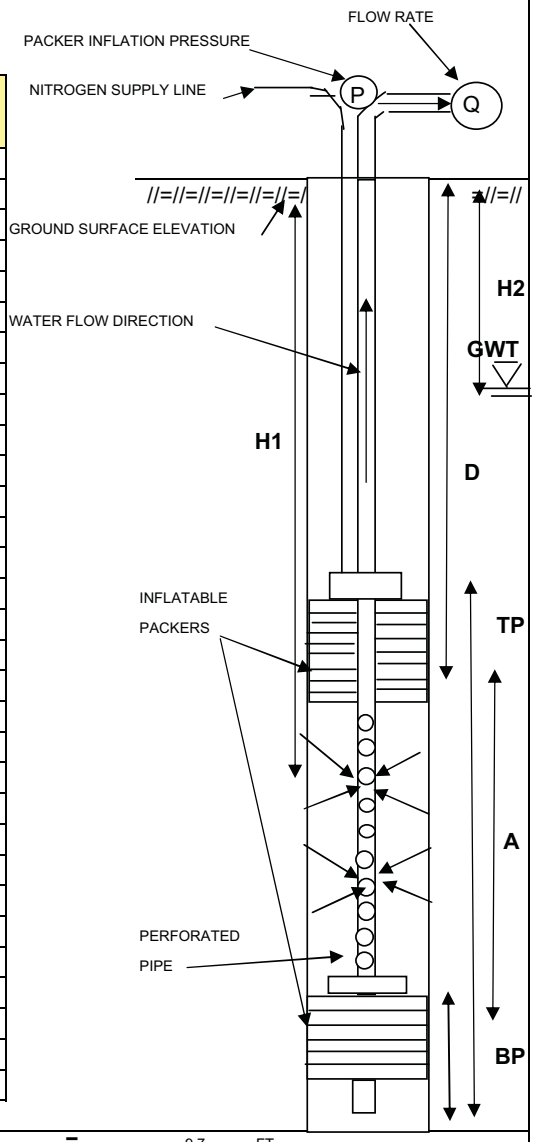

LEGEND:				
	A - TOTAL LENGTH OF TEST SECTION (FT)	=	9.7	FT
	TP - TOTAL LENGTH OF TOP PACKER AND ASSEMBLY	=	15.7	FT
	BP - TOTAL LENGTH OF BOTTOM PACKER AND ASSEMBLY	=	4.65	FT
	D - DISTANCE BETWEEN GROUND SURFACE AND TOP OF THE TEST ZONE	=	109.0	FT
	PIP - PACKER INFLATION PRESSURE (D PSI **+ 50 PSI**)	=	180	PSI
	H1- DISTANCE BETWEEN WATER PRESSURE GAUGE AND GROUND SURFACE	=	114.2	FT
	H2- DISTANCE BETWEEN GROUND SURFACE AND GROUND WATER TABLE	=	11.35	FT

GZA

BORING NO. /TEST NO. MW-66 T7

PACKER TEST LOG

GZA GEOENVIRONMENTAL OF NEW YORK 440 NINTH AVENUE, 18th FLOOR NEW YORK, NEW YORK 10001 SCIENTISTS AND ENGINEERS	Client Entergy Indian Point Energy Cente Buchanan, NY	BORING NO./TEST NO.	MW-66 T8
		SHEET	1 of 1
		FILE NO.	41.0017869.01
		PROJECT LOCATION	Indian Point

CONTRACTOR	Aquifer Drilling & Testing, Inc.	BORING COORDINATES	N 463147.3648	E 604409.1969	
FOREMAN	Dave Carter	GROUND SURFACE EL.(FT)	14.021	DATUM	NGVD 29
GZA ENG.	Sara Covelli	FINAL BORING DEPTH (FT)	200	DATE START/END	1/5/07
DIAMETER OF DRILLED BOREHOLE	3.83 INCH	GROUND WATER DEPTH (STATIC WATER LEVEL DEPTH)	11.62 (below grade)	1.87 FT ground to casing	
I.D. OF DRILLING RODS	2 INCH				

TESTED INTERVAL FROM / TO (FT)	TIME (HR:MIN)	ELAPSED TIME (Δt MIN)	DEPTH UNDER WATER (FT)	DEPTH TO WATER (FT)	CUMULATIVE RECOVERY (ΔH FT)	RECOVERY RATE (ΔH/Δt)
97.3-107.0'	14:40:00	0.0	70.825	31.85	0.00	-
L= 9.7 ft	14:41:00	1.0	71.199	31.48	0.37	0.37400
	14:42:00	2.0	71.558	31.12	0.73	0.36650
	14:43:00	3.0	71.875	30.80	1.05	0.35000
	14:44:00	4.0	72.205	30.47	1.38	0.34500
	14:45:00	5.0	72.507	30.17	1.68	0.33640
	14:46:00	6.0	72.809	29.87	1.98	0.33067
	14:47:00	7.0	73.125	29.55	2.30	0.32857
	14:48:00	8.0	73.427	29.25	2.60	0.32525
	14:49:00	9.0	73.700	28.98	2.88	0.31944
	14:50:00	10.0	73.988	28.69	3.16	0.31630
	14:51:00	11.0	74.247	28.43	3.42	0.31109
	14:52:00	12.0	74.506	28.17	3.68	0.30675
	14:53:00	13.0	74.793	27.89	3.97	0.30523
	14:54:00	14.0	75.066	27.61	4.24	0.30293
	14:55:00	15.0	75.325	27.35	4.50	0.30000
	14:56:00	16.0	75.570	27.11	4.74	0.29656
	14:57:00	17.0	75.828	26.85	5.00	0.29429
	14:58:00	18.0	76.058	26.62	5.23	0.29072
	14:59:00	19.0	76.303	26.38	5.48	0.28832
	15:00:00	20.0	76.547	26.13	5.72	0.28610
	15:01:00	21.0	76.777	25.90	5.95	0.28343

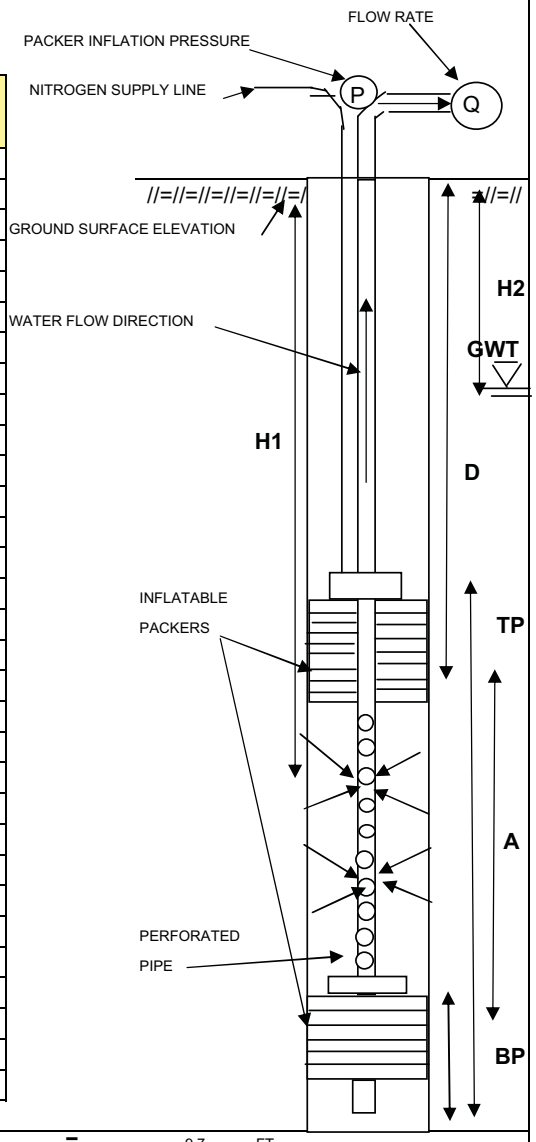

LEGEND:				
	A - TOTAL LENGTH OF TEST SECTION (FT)	=	9.7	FT
	TP - TOTAL LENGTH OF TOP PACKER AND ASSEMBLY	=	15.7	FT
	BP - TOTAL LENGTH OF BOTTOM PACKER AND ASSEMBLY	=	4.65	FT
	D - DISTANCE BETWEEN GROUND SURFACE AND TOP OF THE TEST ZONE	=	97.3	FT
	PIP - PACKER INFLATION PRESSURE (D PSI **+ 50 PSI**)	=	180	PSI
	H1- DISTANCE BETWEEN WATER PRESSURE GAUGE AND GROUND SURFACE	=	102.7	FT
	H2- DISTANCE BETWEEN GROUND SURFACE AND GROUND WATER TABLE	=	11.62	FT

GZA

BORING NO. /TEST NO. MW-66 T8

PACKER TEST LOG

GZA GEOENVIRONMENTAL OF NEW YORK 440 NINTH AVENUE, 18th FLOOR NEW YORK, NEW YORK 10001 SCIENTISTS AND ENGINEERS	Client Entergy Indian Point Energy Cente Buchanan, NY	BORING NO./TEST NO.	MW-66 T9
		SHEET	1 of 1
		FILE NO.	41.0017869.01
		PROJECT LOCATION	Indian Point

CONTRACTOR	Aquifer Drilling & Testing, Inc.	BORING COORDINATES	N 463147.3648	E 604409.1969	
FOREMAN	Dave Carter	GROUND SURFACE EL.(FT)	14.021	DATUM	NGVD 29
GZA ENG.	Sara Covelli	FINAL BORING DEPTH (FT)	200	DATE START/END	1/8/07
DIAMETER OF DRILLED BOREHOLE	3.83 INCH	GROUND WATER DEPTH (STATIC WATER LEVEL DEPTH)	12.70 (below grade)		1.87 FT ground to casing
I.D. OF DRILLING RODS	2 INCH				

TESTED INTERVAL FROM / TO (FT)	TIME (HR:MIN)	ELAPSED TIME (Δt MIN)	DEPTH UNDER WATER (FT)	DEPTH TO WATER (FT)	CUMULATIVE RECOVERY (ΔH FT)	RECOVERY RATE (ΔH/Δt)
84.0-93.7'	8:52:00	0.0	52.961	43.57	0.00	-
L= 9.7 ft	8:53:00	1.0	54.412	42.11	1.45	1.45100
	8:54:00	2.0	55.763	40.76	2.80	1.40100
	8:55:00	3.0	57.042	39.48	4.08	1.36033
	8:56:00	4.0	58.249	38.28	5.29	1.32200
	8:57:00	5.0	59.370	37.16	6.41	1.28180
	8:58:00	6.0	60.433	36.09	7.47	1.24533
	8:59:00	7.0	61.439	35.09	8.48	1.21114
	9:00:00	8.0	62.402	34.12	9.44	1.18013
	9:01:00	9.0	63.307	33.22	10.35	1.14956
	9:02:00	10.0	64.141	32.39	11.18	1.11800
	9:03:00	11.0	64.960	31.57	12.00	1.09082
	9:04:00	12.0	65.708	30.82	12.75	1.06225
	9:05:00	13.0	66.426	30.10	13.47	1.03577
	9:06:00	14.0	67.102	29.42	14.14	1.01007
	9:07:00	15.0	67.734	28.79	14.77	0.98487
	9:08:00	16.0	68.338	28.19	15.38	0.96106
	9:09:00	17.0	68.884	27.64	15.92	0.93665
	9:10:00	18.0	69.416	27.11	16.46	0.91417
	9:11:00	19.0	69.905	26.62	16.94	0.89179
	9:12:00	20.0	70.351	26.18	17.39	0.86950
	9:13:00	21.0	70.782	25.74	17.82	0.84862
	9:14:00	22.0	71.185	25.34	18.22	0.82836
	9:15:00	23.0	71.573	24.95	18.61	0.80922
	9:16:00	24.0	71.932	24.59	18.97	0.79046
	9:17:00	25.0	72.263	24.26	19.30	0.77208
	9:22:00	30.0	73.657	22.87	20.70	0.68987
	9:27:00	35.0	74.606	21.92	21.65	0.61843
	9:32:00	40.0	75.325	21.20	22.36	0.55910

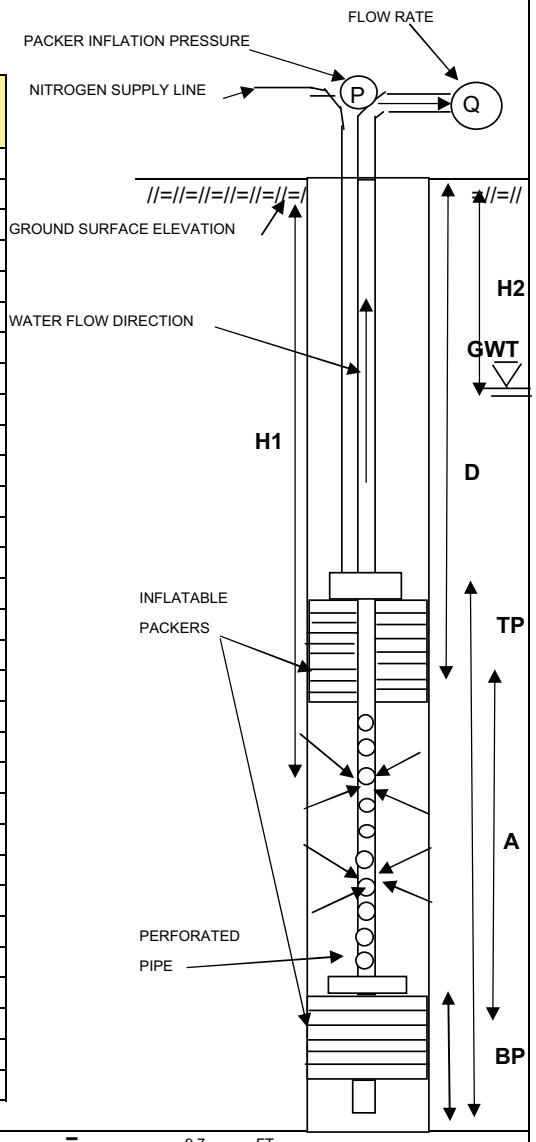

LEGEND:				
	A - TOTAL LENGTH OF TEST SECTION (FT)	=	9.7	FT
	TP - TOTAL LENGTH OF TOP PACKER AND ASSEMBLY	=	15.7	FT
	BP - TOTAL LENGTH OF BOTTOM PACKER AND ASSEMBLY	=	4.65	FT
	D - DISTANCE BETWEEN GROUND SURFACE AND TOP OF THE TEST ZONE	=	84.0	FT
	PIP - PACKER INFLATION PRESSURE (D PSI **+ 50 PSI**)	=	175	PSI
	H1- DISTANCE BETWEEN WATER PRESSURE GAUGE AND GROUND SURFACE	=	96.5	FT
	H2- DISTANCE BETWEEN GROUND SURFACE AND GROUND WATER TABLE	=	12.70	FT

GZA

BORING NO. /TEST NO. MW-66 T9

PACKER TEST LOG

GZA GEOENVIRONMENTAL OF NEW YORK 440 NINTH AVENUE, 18th FLOOR NEW YORK, NEW YORK 10001 SCIENTISTS AND ENGINEERS	Client Entergy Indian Point Energy Cente Buchanan, NY	BORING NO./TEST NO.	MW-66 T10
		SHEET	1 of 1
		FILE NO.	41.0017869.01
		PROJECT LOCATION	Indian Point

CONTRACTOR	Aquifer Drilling & Testing, Inc.	BORING COORDINATES	N 463147.3648	E 604409.1969	
FOREMAN	Dave Carter	GROUND SURFACE EL.(FT)	14.021	DATUM	NGVD 29
GZA ENG.	Sara Covelli	FINAL BORING DEPTH (FT)	200	DATE START/END	1/9/07
DIAMETER OF DRILLED BOREHOLE	3.83 INCH	GROUND WATER DEPTH (STATIC WATER LEVEL DEPTH)	12.60 (below grade)		1.87 FT ground to casing
I.D. OF DRILLING RODS	2 INCH				

TESTED INTERVAL FROM / TO (FT)	TIME (HR:MIN)	ELAPSED TIME (Δt MIN)	DEPTH UNDER WATER (FT)	DEPTH TO WATER (FT)	CUMULATIVE RECOVERY (ΔH FT)	RECOVERY RATE (ΔH/Δt)
63.3-73.0'	10:24:00	0.0	34.805	33.96	0.00	-
L= 9.7 ft	10:25:00	1.0	35.135	33.63	0.33	0.33000
	10:26:00	2.0	35.466	33.30	0.66	0.33050
	10:27:00	3.0	35.767	33.00	0.96	0.32067
	10:28:00	4.0	36.040	32.73	1.24	0.30875
	10:29:00	5.0	36.342	32.43	1.54	0.30740
	10:30:00	6.0	36.629	32.14	1.82	0.30400
	10:31:00	7.0	36.859	31.91	2.05	0.29343
	10:32:00	8.0	37.189	31.58	2.38	0.29800
	10:33:00	9.0	37.462	31.31	2.66	0.29522
	10:34:00	10.0	37.735	31.03	2.93	0.29300
	10:35:00	11.0	37.979	30.79	3.17	0.28855
	10:36:00	12.0	38.252	30.52	3.45	0.28725
	10:37:00	13.0	38.510	30.26	3.71	0.28500
	10:38:00	14.0	38.754	30.02	3.95	0.28207
	10:39:00	15.0	38.998	29.77	4.19	0.27953
	10:40:00	16.0	39.257	29.51	4.45	0.27825
	10:41:00	17.0	39.487	29.28	4.68	0.27541
	10:42:00	18.0	39.731	29.04	4.93	0.27367
	10:43:00	19.0	39.961	28.81	5.16	0.27137
	10:44:00	20.0	40.205	28.56	5.40	0.27000
	10:45:00	21.0	40.435	28.33	5.63	0.26810
	10:46:00	22.0	40.650	28.12	5.85	0.26568
	10:47:00	23.0	40.880	27.89	6.08	0.26413
	10:48:00	24.0	41.095	27.67	6.29	0.26208
	10:49:00	25.0	41.311	27.46	6.51	0.26024
	10:50:00	26.0	41.526	27.24	6.72	0.25850
	10:51:00	27.0	41.742	27.03	6.94	0.25693
	10:56:00	32.0	42.761	26.01	7.96	0.24863
	11:01:00	37.0	43.695	25.07	8.89	0.24027

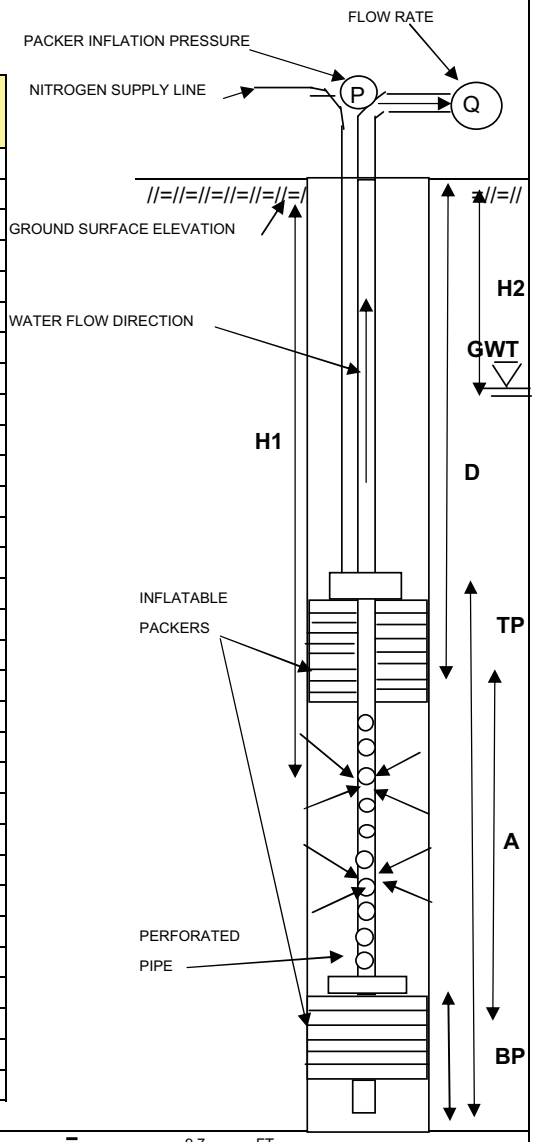

LEGEND:				
	A - TOTAL LENGTH OF TEST SECTION (FT)	=	9.7	FT
	TP - TOTAL LENGTH OF TOP PACKER AND ASSEMBLY	=	15.7	FT
	BP - TOTAL LENGTH OF BOTTOM PACKER AND ASSEMBLY	=	4.65	FT
	D - DISTANCE BETWEEN GROUND SURFACE AND TOP OF THE TEST ZONE	=	63.3	FT
	PIP - PACKER INFLATION PRESSURE (D PSI **+ 50 PSI**)	=	180	PSI
	H1- DISTANCE BETWEEN WATER PRESSURE GAUGE AND GROUND SURFACE	=	68.8	FT
	H2- DISTANCE BETWEEN GROUND SURFACE AND GROUND WATER TABLE	=	12.60	FT

GZA

BORING NO. /TEST NO. MW-66 T10

PACKER TEST LOG

GZA GEOENVIRONMENTAL OF NEW YORK 440 NINTH AVENUE, 18th FLOOR NEW YORK, NEW YORK 10001 SCIENTISTS AND ENGINEERS	Client Entergy Indian Point Energy Cente Buchanan, NY	BORING NO./TEST NO.	MW-66 T11
		SHEET	1 of 1
		FILE NO.	41.0017869.01
		PROJECT LOCATION	Indian Point

CONTRACTOR	Aquifer Drilling & Testing, Inc.	BORING COORDINATES	N 463147.3648	E 604409.1969	
FOREMAN	Dave Carter	GROUND SURFACE EL.(FT)	14.021	DATUM	NGVD 29
GZA ENG.	Sara Covelli	FINAL BORING DEPTH (FT)	200	DATE START/END	1/9/07
DIAMETER OF DRILLED BOREHOLE	3.83 INCH	GROUND WATER DEPTH (STATIC WATER LEVEL DEPTH)	12.15 (below grade)		1.87 FT ground to casing
I.D. OF DRILLING RODS	2 INCH				

TESTED INTERVAL FROM / TO (FT)	TIME (HR:MIN)	ELAPSED TIME (Δt MIN)	DEPTH UNDER WATER (FT)	DEPTH TO WATER (FT)	CUMULATIVE RECOVERY (ΔH FT)	RECOVERY RATE (ΔH/Δt)
53.0-62.7'	11:43:00	0.0	24.540	33.97	0.00	-
L= 9.7 ft	11:44:00	1.0	25.257	33.25	0.72	0.71700
	11:45:00	2.0	25.889	32.62	1.35	0.67450
	11:46:00	3.0	26.521	31.99	1.98	0.66033
	11:47:00	4.0	27.152	31.35	2.61	0.65300
	11:48:00	5.0	27.741	30.77	3.20	0.64020
	11:49:00	6.0	28.330	30.18	3.79	0.63167
	11:50:00	7.0	28.890	29.62	4.35	0.62143
	11:51:00	8.0	29.435	29.07	4.90	0.61188
	11:52:00	9.0	29.952	28.55	5.41	0.60133
	11:53:00	10.0	30.469	28.04	5.93	0.59290
	11:54:00	11.0	30.986	27.52	6.45	0.58600
	11:55:00	12.0	31.474	27.03	6.93	0.57783
	11:56:00	13.0	31.948	26.56	7.41	0.56985
	11:57:00	14.0	32.422	26.08	7.88	0.56300
	11:58:00	15.0	32.881	25.63	8.34	0.55607
	11:59:00	16.0	33.326	25.18	8.79	0.54913
	12:00:00	17.0	33.743	24.76	9.20	0.54135
	12:01:00	18.0	34.159	24.35	9.62	0.53439
	12:02:00	19.0	34.575	23.93	10.04	0.52816
	12:03:00	20.0	34.963	23.54	10.42	0.52115
	12:08:00	25.0	36.772	21.73	12.23	0.48928
	12:13:00	30.0	38.323	20.18	13.78	0.45943
	12:18:00	35.0	39.688	18.82	15.15	0.43280
	12:23:00	40.0	40.851	17.66	16.31	0.40778
	12:28:00	45.0	41.828	16.68	17.29	0.38418
	12:33:00	50.0	42.661	15.85	18.12	0.36242
	12:38:00	55.0	43.393	15.11	18.85	0.34278
	12:43:00	60.0	44.011	14.50	19.47	0.32452
	12:48:00	65.0	44.514	13.99	19.97	0.30729

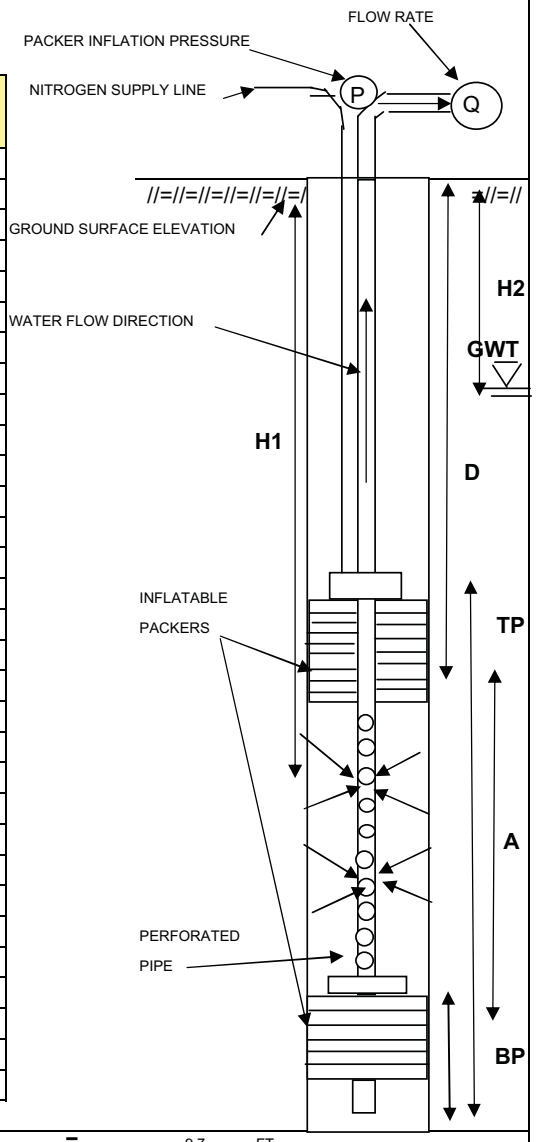

LEGEND:				
	A - TOTAL LENGTH OF TEST SECTION (FT)	=	9.7	FT
	TP - TOTAL LENGTH OF TOP PACKER AND ASSEMBLY	=	15.7	FT
	BP - TOTAL LENGTH OF BOTTOM PACKER AND ASSEMBLY	=	4.65	FT
	D - DISTANCE BETWEEN GROUND SURFACE AND TOP OF THE TEST ZONE	=	53.0	FT
	PIP - PACKER INFLATION PRESSURE (D PSI **+ 50 PSI**)	=	180	PSI
	H1- DISTANCE BETWEEN WATER PRESSURE GAUGE AND GROUND SURFACE	=	58.5	FT
	H2- DISTANCE BETWEEN GROUND SURFACE AND GROUND WATER TABLE	=	12.15	FT

GZA

BORING NO. /TEST NO. MW-66 T11

PACKER TEST LOG

GZA GEOENVIRONMENTAL OF NEW YORK 440 NINTH AVENUE, 18th FLOOR NEW YORK, NEW YORK 10001 SCIENTISTS AND ENGINEERS	Client Entergy Indian Point Energy Cente Buchanan, NY	BORING NO./TEST NO. MW-66 T12 SHEET 1 of 1 FILE NO. 41.0017869.01 PROJECT LOCATION Indian Point

CONTRACTOR	Aquifer Drilling & Testing, Inc.	BORING COORDINATES	N 463147.3648 E 604409.1969
FOREMAN	Dave Carter	GROUND SURFACE EL.(FT)	14.021 DATUM NGVD 29
GZA ENG.	Sara Covelli	FINAL BORING DEPTH (FT)	200 DATE START/END 1/8/07
DIAMETER OF DRILLED BOREHOLE	3.83 INCH	GROUND WATER DEPTH (STATIC WATER LEVEL DEPTH)	11.25 (below grade) 1.87 FT ground to casing
I.D. OF DRILLING RODS	2 INCH		

TESTED INTERVAL FROM / TO (FT)	TIME (HR:MIN:SEC)	ELAPSED TIME (Δt MIN)	DEPTH UNDER WATER (FT)	DEPTH TO WATER (FT)	DRAWDOWN (ΔH FT)	PUMPING RATE (gal/min)	SPECIFIC CAPACITY (gpm/ft)
38.0-52.0	13:54	0	28.114	19.69	8.436	3.800	0.450
L= 24.0 ft	13:55	1	28.114	19.69	8.436	3.800	0.450
	13:56	2	28.057	19.74	8.493	3.800	0.447
	13:57	3	28.057	19.74	8.493	3.800	0.447
	13:58	4	28.042	19.76	8.508	3.800	0.447
	13:59	5	28.014	19.79	8.536	3.800	0.445
	14:00	6	28.014	19.79	8.536	3.800	0.445
	14:01	7	28.014	19.79	8.536	3.800	0.445
	14:02	8	27.999	19.80	8.551	3.800	0.444
	14:03	9	28.028	19.77	8.522	3.800	0.446
	14:04	10	28.014	19.79	8.536	3.800	0.445
	14:05	11	28.014	19.79	8.536	3.800	0.445
	14:06	12	27.999	19.80	8.551	3.800	0.444
	14:07	13	28.014	19.79	8.536	3.800	0.445
	14:08	14	28.028	19.77	8.522	3.800	0.446
	14:09	15	28.042	19.76	8.508	3.800	0.447
	14:10	16	28.014	19.79	8.536	3.800	0.445
	14:11	17	27.999	19.80	8.551	3.800	0.444
	14:12	18	28.014	19.79	8.536	3.800	0.445
	14:13	19	28.014	19.79	8.536	3.800	0.445
	14:14	20	27.999	19.80	8.551	3.800	0.444
	14:15	21	27.999	19.80	8.551	3.800	0.444
	14:16	22	28.014	19.79	8.536	3.800	0.445
	14:17	23	28.071	19.73	8.479	3.800	0.448
	14:18	24	28.014	19.79	8.536	3.800	0.445
	14:19	25	28.014	19.79	8.536	3.800	0.445
	14:20	26	27.999	19.80	8.551	3.800	0.444
	14:21	27	28.014	19.79	8.536	3.800	0.445
	14:22	28	28.100	19.70	8.45	3.800	0.450
	14:23	29	28.014	19.79	8.536	3.800	0.445
	14:24	30	28.014	19.79	8.536	3.800	0.445

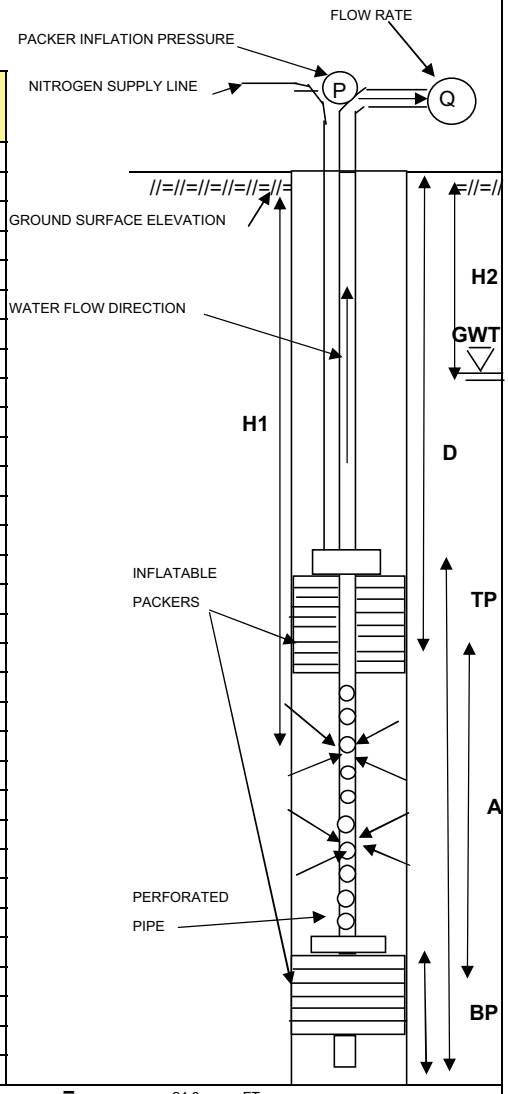

LEGEND:			
A - TOTAL LENGTH OF TEST SECTION (FT)	=	24.0	FT
TP - TOTAL LENGTH OF TOP PACKER AND ASSEMBLY	=	15.7	FT
BP - TOTAL LENGTH OF BOTTOM PACKER AND ASSEMBLY	=	4.65	FT
D - DISTANCE BETWEEN GROUND SURFACE AND TOP OF THE TEST ZONE	=	38.0	FT
PIP - PACKER INFLATION PRESSURE (D PSI + **50 PSI**)	=	175	PSI
H1- DISTANCE BETWEEN WATER PRESSURE GAUGE AND GROUND SURFACE	=	47.8	FT
H2- DISTANCE BETWEEN GROUND SURFACE AND GROUND WATER TABLE	=	11.25	FT

NOTES:
The tested interval begins at the bottom of the well casing (38.0' b/g) and ends at 52.0' b/g. Only the bottom packer was inflated for this interval.

PACKER TEST LOG

GZA GEOENVIRONMENTAL OF NEW YORK 440 NINTH AVENUE, 18th FLOOR NEW YORK, NEW YORK 10001 SCIENTISTS AND ENGINEERS	Client Entergy Indian Point Energy Cente Buchanan, NY	BORING NO./TEST NO.	MW-67 T1
		SHEET	1 of 1
		FILE NO.	41.0017869.01
		PROJECT LOCATION	Indian Point

CONTRACTOR	Aquifer Drilling & Testing, Inc.	BORING COORDINATES	N 463127.0611	E 604426.6654	
FOREMAN	Dave Carter	GROUND SURFACE EL.(FT)	14.356	DATUM	NGVD 29
GZA ENG.	Sara Covelli	FINAL BORING DEPTH (FT)	347.9	DATE START/END	8/7/07
DIAMETER OF DRILLED BOREHOLE	3.83 INCH	GROUND WATER DEPTH (STATIC WATER LEVEL DEPTH)	13.17	(below grade)	Casing is 0.15 ft above ground.
I.D. OF DRILLING RODS	2 INCH				

TESTED INTERVAL FROM / TO (FT)	TIME (HR:MIN)	ELAPSED TIME (Δt MIN)	DEPTH UNDER WATER (FT)	DEPTH TO WATER (FT)	CUMULATIVE RECOVERY (ΔH FT)	RECOVERY RATE (ΔH/Δt)
331.1-349.75'	11:34:00	0.0	274.770	23.18	0.00	-
L= 18.65 ft	11:35:00	1.0	281.164	16.79	6.39	6.39400
	11:36:00	2.0	282.960	14.99	8.19	4.09500
	11:37:00	3.0	283.751	14.20	8.98	2.99367
	11:38:00	4.0	284.074	13.88	9.30	2.32600
	11:39:00	5.0	284.254	13.70	9.48	1.89680
	11:40:00	6.0	284.397	13.55	9.63	1.60450
	11:41:00	7.0	284.433	13.52	9.66	1.38043
	11:42:00	8.0	284.469	13.48	9.70	1.21238
	11:43:00	9.0	284.505	13.45	9.74	1.08167

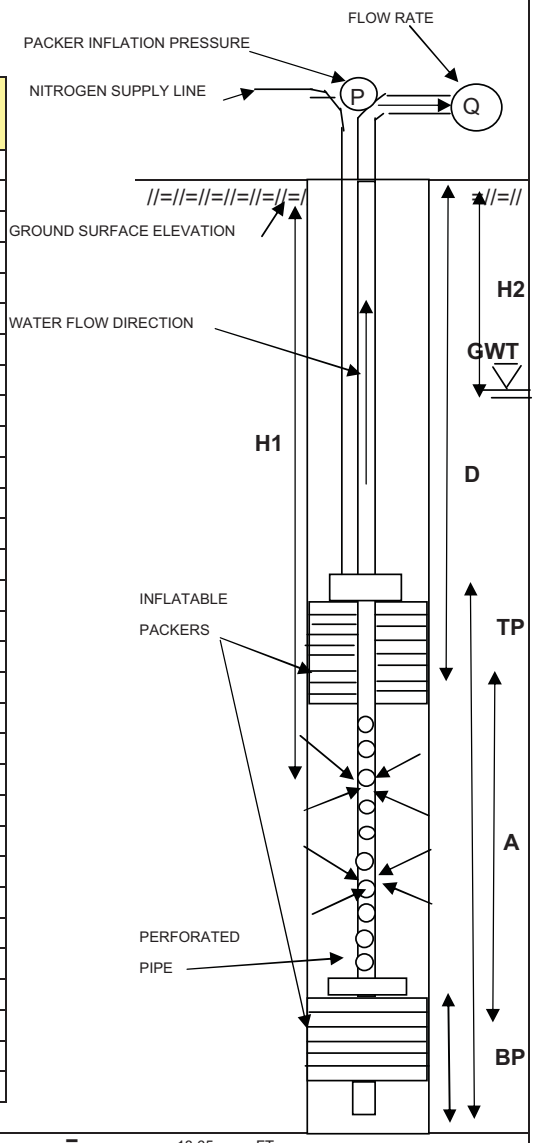

LEGEND:				
	A - TOTAL LENGTH OF TEST SECTION (FT)	=	18.65	FT
	TP - TOTAL LENGTH OF TOP PACKER AND ASSEMBLY	=	19.9	FT
	BP - TOTAL LENGTH OF BOTTOM PACKER AND ASSEMBLY	=	3.85	FT
	D - DISTANCE BETWEEN GROUND SURFACE AND TOP OF THE TEST ZONE	=	331.1	FT
	PIP - PACKER INFLATION PRESSURE (D PSI **+ 50 PSI**)	=	220 - 410	PSI
	H1- DISTANCE BETWEEN WATER PRESSURE GAUGE AND GROUND SURFACE	=	298.0	FT
	H2- DISTANCE BETWEEN GROUND SURFACE AND GROUND WATER TABLE	=	13.17	FT

NOTE: Only the top packer was inflated for this test. The interval tested here may be considered from 331.1' b/g to bottom of well.

GZA

BORING NO. /TEST NO. MW-67 T1

PACKER TEST LOG

GZA GEOENVIRONMENTAL OF NEW YORK 440 NINTH AVENUE, 18th FLOOR NEW YORK, NEW YORK 10001 SCIENTISTS AND ENGINEERS	Client Entergy Indian Point Energy Cente Buchanan, NY	BORING NO./TEST NO. MW-67 T1CH SHEET 1 of 1 FILE NO. 41.0017869.01 PROJECT LOCATION Indian Point

CONTRACTOR	Aquifer Drilling & Testing, Inc.	BORING COORDINATES	N 463127.0611	E 604426.6654	
FOREMAN	Dave Carter	GROUND SURFACE EL.(FT)	14.356	DATUM	NGVD 29
GZA ENG.	Sara Covelli	FINAL BORING DEPTH (FT)	347.9	DATE START/END	8/7/07
DIAMETER OF DRILLED BOREHOLE	3.83 INCH	GROUND WATER DEPTH (STATIC WATER LEVEL DEPTH)	13.17 (below grade)	Casing is 0.15 ft above ground.	
I.D. OF DRILLING RODS	2 INCH				

TESTED INTERVAL FROM / TO (FT)	TIME (HR:MIN:SEC)	ELAPSED TIME (Δt MIN)	DEPTH UNDER WATER (FT)	DEPTH TO WATER (FT)	DRAWDOWN (ΔH FT)	PUMPING RATE (gal/min)	SPECIFIC CAPACITY (gpm/ft)
331.1-349.75'	12:17	0	275.489	22.46	9.291	1.500	0.161
L= 18.65 ft	12:18	1	275.525	22.43	9.255	1.500	0.162
	12:19	2	275.453	22.50	9.327	1.500	0.161
	12:20	3	275.453	22.50	9.327	1.500	0.161
	12:21	4	275.381	22.57	9.399	1.500	0.160
	12:22	5	275.381	22.57	9.399	1.500	0.160
	12:23	6	275.417	22.53	9.363	1.500	0.160
	12:24	7	275.453	22.50	9.327	1.500	0.161
	12:25	8	275.201	22.75	9.579	1.500	0.157
	12:26	9	275.273	22.68	9.507	1.500	0.158
	12:27	10	275.309	22.64	9.471	1.500	0.158
	12:28	11	275.237	22.71	9.543	1.500	0.157
	12:29	12	275.309	22.64	9.471	1.500	0.158
	12:30	13	275.453	22.50	9.327	1.500	0.161
	12:31	14	275.237	22.71	9.543	1.500	0.157
	12:32	15	275.130	22.82	9.65	1.500	0.155
	12:33	16	275.237	22.71	9.543	1.500	0.157
	12:34	17	275.273	22.68	9.507	1.500	0.158
	12:35	18	275.166	22.78	9.614	1.500	0.156
	12:36	19	275.417	22.53	9.363	1.500	0.160
	12:37	20	275.309	22.64	9.471	1.500	0.158
	12:38	21	275.237	22.71	9.543	1.500	0.157
	12:39	22	275.237	22.71	9.543	1.500	0.157
	12:40	23	275.237	22.71	9.543	1.500	0.157
	12:41	24	275.201	22.75	9.579	1.500	0.157
	12:46	29	275.201	22.75	9.579	1.500	0.157
	12:51	34	275.094	22.86	9.686	1.500	0.155
	12:56	39	275.130	22.82	9.65	1.500	0.155

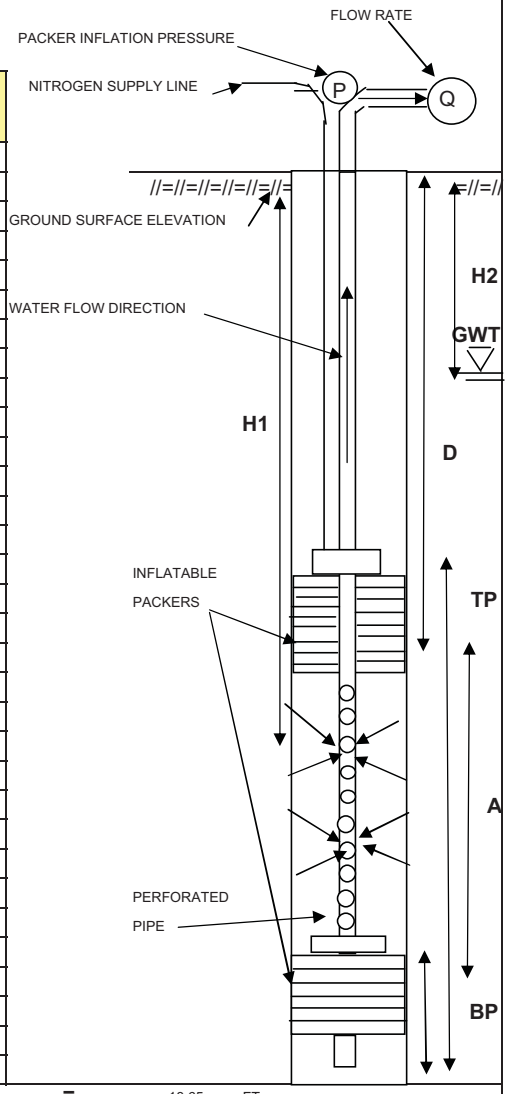

LEGEND:			
A - TOTAL LENGTH OF TEST SECTION (FT)	=	18.65	FT
TP - TOTAL LENGTH OF TOP PACKER AND ASSEMBLY	=	19.9	FT
BP - TOTAL LENGTH OF BOTTOM PACKER AND ASSEMBLY	=	3.85	FT
D - DISTANCE BETWEEN GROUND SURFACE AND TOP OF THE TEST ZONE	=	331.1	FT
PIP - PACKER INFLATION PRESSURE (D PSI + **50 PSI**)	=	220 - 410	PSI
H1- DISTANCE BETWEEN WATER PRESSURE GAUGE AND GROUND SURFACE	=	298.0	FT
H2- DISTANCE BETWEEN GROUND SURFACE AND GROUND WATER TABLE	=	13.17	FT

GZA

BORING NO. /TEST NO. MW-67 T1 CH

PACKER TEST LOG

GZA GEOENVIRONMENTAL OF NEW YORK 440 NINTH AVENUE, 18th FLOOR NEW YORK, NEW YORK 10001 SCIENTISTS AND ENGINEERS	Client Entergy Indian Point Energy Cente Buchanan, NY	BORING NO./TEST NO.	MW-67 T2
		SHEET	1 of 1
		FILE NO.	41.0017869.01
		PROJECT LOCATION	Indian Point

CONTRACTOR	Aquifer Drilling & Testing, Inc.	BORING COORDINATES	N 463127.0611	E 604426.6654	
FOREMAN	Dave Carter	GROUND SURFACE EL.(FT)	14.356	DATUM	NGVD 29
GZA ENG.	Sara Covelli	FINAL BORING DEPTH (FT)	347.9	DATE START/END	8/7/07
DIAMETER OF DRILLED BOREHOLE	3.83 INCH	GROUND WATER DEPTH (STATIC WATER LEVEL DEPTH)	13.75	(below grade)	Casing is 0.15 ft above ground.
I.D. OF DRILLING RODS	2 INCH				

TESTED INTERVAL FROM / TO (FT)	TIME (HR:MIN)	ELAPSED TIME (Δt MIN)	DEPTH UNDER WATER (FT)	DEPTH TO WATER (FT)	CUMULATIVE RECOVERY (ΔH FT)	RECOVERY RATE (ΔH/Δt)
324.1 - 338.9	14:09:30	0.0	268.198	22.50	0.00	-
L= 14.8 ft	14:10:00	0.5	272.328	18.37	4.13	8.26000
	14:10:30	1.0	274.088	16.61	5.89	5.89000
	14:11:00	1.5	274.986	15.71	6.79	4.52533
	14:11:30	2.0	275.632	15.07	7.43	3.71700
	14:12:00	3.0	276.351	14.35	8.15	2.71767
	14:13:00	4.0	276.710	13.99	8.51	2.12800
	14:14:00	5.0	276.854	13.85	8.66	1.73120
	14:15:00	6.0	276.961	13.74	8.76	1.46050
	14:16:00	7.0	277.033	13.67	8.84	1.26214
	14:17:00	8.0	277.069	13.63	8.87	1.10888

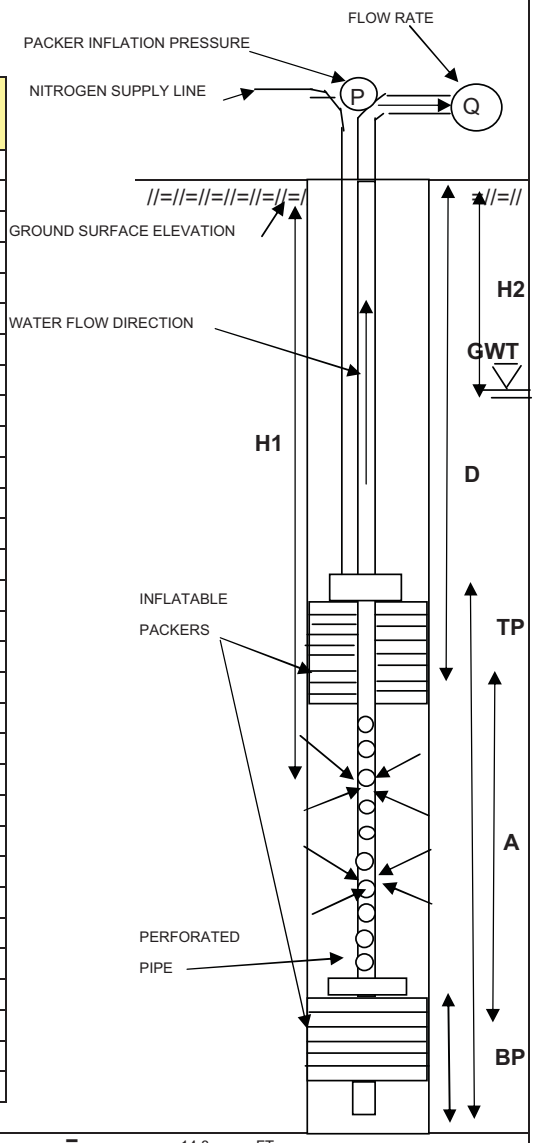

LEGEND:				
A - TOTAL LENGTH OF TEST SECTION (FT)	=	14.8	FT
TP - TOTAL LENGTH OF TOP PACKER AND ASSEMBLY	=	19.9	FT
BP - TOTAL LENGTH OF BOTTOM PACKER AND ASSEMBLY	=	3.85	FT
D - DISTANCE BETWEEN GROUND SURFACE AND TOP OF THE TEST ZONE	=	324.1	FT
PIP - PACKER INFLATION PRESSURE (D PSI **+ 50 PSI**)	=	250 - 410	PSI
H1- DISTANCE BETWEEN WATER PRESSURE GAUGE AND GROUND SURFACE	=	290.7	FT
H2- DISTANCE BETWEEN GROUND SURFACE AND GROUND WATER TABLE	=	13.75	FT

NOTES: Excessive interconnectivity observed between test zone and below the test zone. Test was stopped after drawdown and recovery.

PACKER TEST LOG

GZA GEOENVIRONMENTAL OF NEW YORK 440 NINTH AVENUE, 18th FLOOR NEW YORK, NEW YORK 10001 SCIENTISTS AND ENGINEERS	Client Entergy Indian Point Energy Cente Buchanan, NY	BORING NO./TEST NO. MW-67 T2A CH SHEET 1 of 1 FILE NO. 41.0017869.01 PROJECT LOCATION Indian Point

CONTRACTOR	Aquifer Drilling & Testing, Inc.	BORING COORDINATES	N 463127.0611	E 604426.6654	
FOREMAN	Dave Carter	GROUND SURFACE EL.(FT)	14.356	DATUM	NGVD 29
GZA ENG.	Sara Covelli	FINAL BORING DEPTH (FT)	347.9	DATE START/END	8/8/07
DIAMETER OF DRILLED BOREHOLE	3.83 INCH	GROUND WATER DEPTH (STATIC WATER LEVEL DEPTH)	13.46 (below grade)	Casing is 0.15 ft above ground.	
I.D. OF DRILLING RODS	2 INCH				

TESTED INTERVAL FROM / TO (FT)	TIME (HR:MIN:SEC)	ELAPSED TIME (Δt MIN)	DEPTH UNDER WATER (FT)	DEPTH TO WATER (FT)	DRAWDOWN (ΔH FT)	PUMPING RATE (gal/min)	SPECIFIC CAPACITY (gpm/ft)
319.6 - 334.4	13:38	0	259.149	27.04	13.581	1.300	0.096
L= 14.8 ft	13:39	1	259.114	27.08	13.616	1.300	0.095
	13:40	2	259.149	27.04	13.581	1.300	0.096
	13:41	3	259.149	27.04	13.581	1.300	0.096
	13:42	4	259.114	27.08	13.616	1.300	0.095
	13:43	5	259.114	27.08	13.616	1.300	0.095
	13:44	6	259.078	27.11	13.652	1.300	0.095
	13:45	7	259.006	27.18	13.724	1.300	0.095
	13:46	8	259.042	27.15	13.688	1.300	0.095
	13:47	9	259.006	27.18	13.724	1.300	0.095
	13:48	10	258.970	27.22	13.76	1.300	0.094
	13:49	11	258.934	27.26	13.796	1.300	0.094
	13:50	12	259.006	27.18	13.724	1.300	0.095
	13:55	17	258.970	27.22	13.76	1.300	0.094
	14:00	22	258.826	27.36	13.904	1.300	0.093
	14:05	27	258.862	27.33	13.868	1.300	0.094
	14:10	32	258.826	27.36	13.904	1.300	0.093
	14:15	37	258.790	27.40	13.94	1.300	0.093
	14:20	42	258.790	27.40	13.94	1.300	0.093

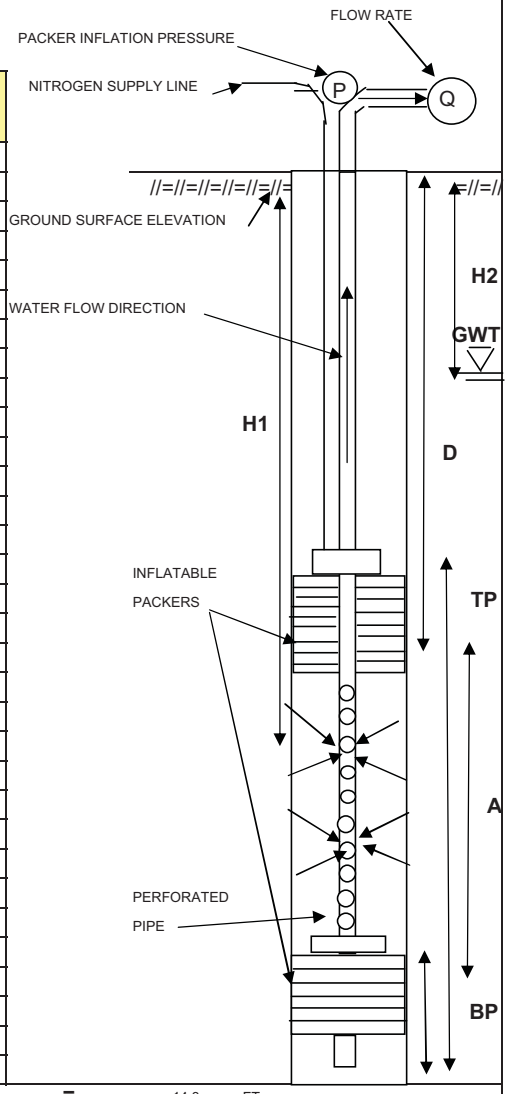

LEGEND:			
A - TOTAL LENGTH OF TEST SECTION (FT)	=	14.8	FT
TP - TOTAL LENGTH OF TOP PACKER AND ASSEMBLY	=	19.9	FT
BP - TOTAL LENGTH OF BOTTOM PACKER AND ASSEMBLY	=	3.85	FT
D - DISTANCE BETWEEN GROUND SURFACE AND TOP OF THE TEST ZONE	=	319.6	FT
PIP - PACKER INFLATION PRESSURE (D PSI + **50 PSI**)	=	225	PSI
H1- DISTANCE BETWEEN WATER PRESSURE GAUGE AND GROUND SURFACE	=	286.2	FT
H2- DISTANCE BETWEEN GROUND SURFACE AND GROUND WATER TABLE	=	13.46	FT

GZA

BORING NO. /TEST NO. MW-67 T2A CH

PACKER TEST LOG

GZA GEOENVIRONMENTAL OF NEW YORK 440 NINTH AVENUE, 18th FLOOR NEW YORK, NEW YORK 10001 SCIENTISTS AND ENGINEERS	Client Entergy Indian Point Energy Cente Buchanan, NY	BORING NO./TEST NO.	MW-67 T2B
		SHEET	1 of 1
		FILE NO.	41.0017869.01
		PROJECT LOCATION	Indian Point

CONTRACTOR	Aquifer Drilling & Testing, Inc.	BORING COORDINATES	N 463127.0611	E 604426.6654	
FOREMAN	Dave Carter	GROUND SURFACE EL.(FT)	14.356	DATUM	NGVD 29
GZA ENG.	Sara Covelli	FINAL BORING DEPTH (FT)	347.9	DATE START/END	8/9/07
DIAMETER OF DRILLED BOREHOLE	3.83 INCH	GROUND WATER DEPTH (STATIC WATER LEVEL DEPTH)	13.26	(below grade)	Casing is 0.15 ft above ground.
I.D. OF DRILLING RODS	2 INCH				

TESTED INTERVAL FROM / TO (FT)	TIME (HR:MIN)	ELAPSED TIME (Δt MIN)	DEPTH UNDER WATER (FT)	DEPTH TO WATER (FT)	CUMULATIVE RECOVERY (ΔH FT)	RECOVERY RATE (ΔH/Δt)
319.6 - 349.75	9:35:30	0.0	266.905	19.32	0.00	-
L= 30.15 ft	9:36:00	0.5	267.408	18.81	0.50	1.00600
	9:36:30	1.0	270.425	15.80	3.52	3.52000
	9:37:00	1.5	271.538	14.68	4.63	3.08867
	9:37:30	2.0	272.292	13.93	5.39	2.69350
	9:38:30	3.0	273.082	13.14	6.18	2.05900
	9:39:30	4.0	273.334	12.89	6.43	1.60725
	9:40:30	5.0	273.513	12.71	6.61	1.32160
	9:41:30	6.0	273.621	12.60	6.72	1.11933

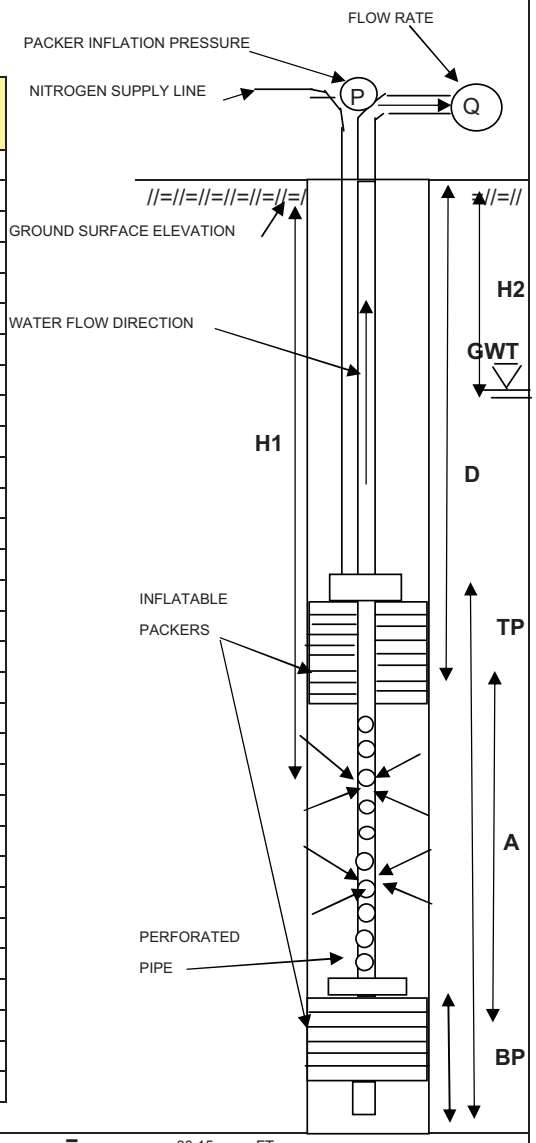

LEGEND:				
A - TOTAL LENGTH OF TEST SECTION (FT)	=	30.15	FT
TP - TOTAL LENGTH OF TOP PACKER AND ASSEMBLY	=	19.9	FT
BP - TOTAL LENGTH OF BOTTOM PACKER AND ASSEMBLY	=	3.85	FT
D - DISTANCE BETWEEN GROUND SURFACE AND TOP OF THE TEST ZONE	=	319.6	FT
PIP - PACKER INFLATION PRESSURE (D PSI **+ 50 PSI**)	=	220	PSI
H1- DISTANCE BETWEEN WATER PRESSURE GAUGE AND GROUND SURFACE	=	286.2	FT
H2- DISTANCE BETWEEN GROUND SURFACE AND GROUND WATER TABLE	=	13.26	FT

NOTE: Only the top packer was inflated for this test. The interval tested here may be considered from 319.6' b/g to bottom of well.

PACKER TEST LOG

GZA GEOENVIRONMENTAL OF NEW YORK 440 NINTH AVENUE, 18th FLOOR NEW YORK, NEW YORK 10001 SCIENTISTS AND ENGINEERS	Client Entergy Indian Point Energy Cente Buchanan, NY	BORING NO./TEST NO. MW-67 T2B CH SHEET 1 of 1 FILE NO. 41.0017869.01 PROJECT LOCATION Indian Point

CONTRACTOR	Aquifer Drilling & Testing, Inc.	BORING COORDINATES	N 463127.0611	E 604426.6654	
FOREMAN	Dave Carter	GROUND SURFACE EL.(FT)	14.356	DATUM	NGVD 29
GZA ENG.	Sara Covelli	FINAL BORING DEPTH (FT)	347.9	DATE START/END	8/9/07
DIAMETER OF DRILLED BOREHOLE	3.83 INCH	GROUND WATER DEPTH (STATIC WATER LEVEL DEPTH)	13.26	(below grade)	Casing is 0.15 ft above ground.
I.D. OF DRILLING RODS	2 INCH				

TESTED INTERVAL FROM / TO (FT)	TIME (HR:MIN:SEC)	ELAPSED TIME (Δt MIN)	DEPTH UNDER WATER (FT)	DEPTH TO WATER (FT)	DRAWDOWN (ΔH FT)	PUMPING RATE (gal/min)	SPECIFIC CAPACITY (gpm/ft)
319.6 - 349.75	10:01	0	266.115	20.11	6.845	1.300	0.190
L= 30.15 ft	10:02	1	266.115	20.11	6.845	1.300	0.190
	10:03	2	266.115	20.11	6.845	1.300	0.190
	10:04	3	266.187	20.03	6.773	1.300	0.192
	10:05	4	266.187	20.03	6.773	1.300	0.192
	10:06	5	266.223	20.00	6.737	1.300	0.193
	10:07	6	266.115	20.11	6.845	1.300	0.190
	10:08	7	266.115	20.11	6.845	1.300	0.190
	10:09	8	266.546	19.67	6.414	1.300	0.203
	10:10	9	266.474	19.75	6.486	1.300	0.200
	10:11	10	266.439	19.78	6.521	1.300	0.199
	10:12	11	266.474	19.75	6.486	1.300	0.200
	10:13	12	266.546	19.67	6.414	1.300	0.203
	10:18	17	266.439	19.78	6.521	1.300	0.199
	10:23	22	266.439	19.78	6.521	1.300	0.199
	10:28	27	266.331	19.89	6.629	1.300	0.196
	10:33	32	266.331	19.89	6.629	1.300	0.196
	10:38	37	266.331	19.89	6.629	1.300	0.196
	10:43	42	266.259	19.96	6.701	1.300	0.194
	10:48	47	266.259	19.96	6.701	1.300	0.194

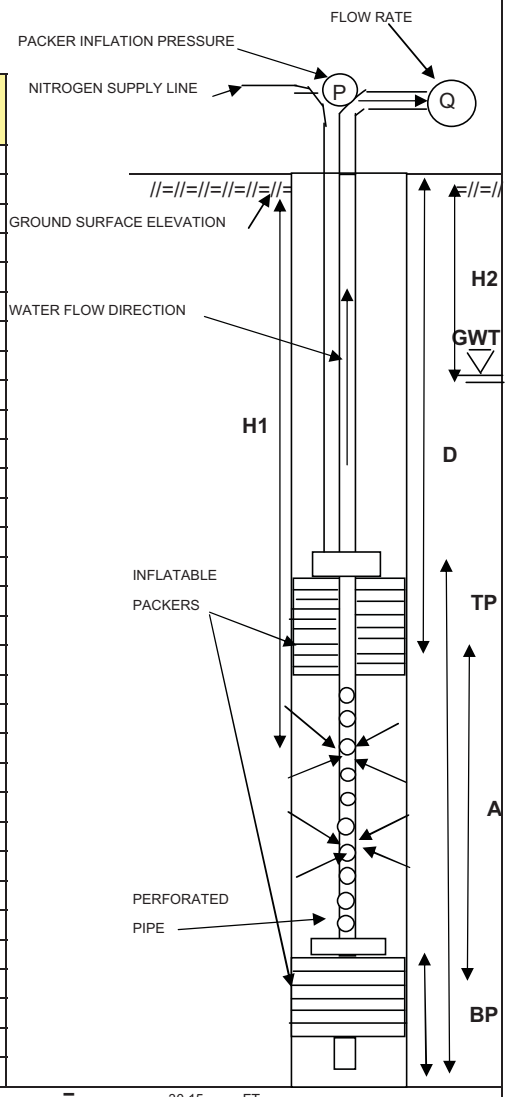

LEGEND:				
A - TOTAL LENGTH OF TEST SECTION (FT)	=	30.15	FT
TP - TOTAL LENGTH OF TOP PACKER AND ASSEMBLY	=	19.9	FT
BP - TOTAL LENGTH OF BOTTOM PACKER AND ASSEMBLY	=	3.85	FT
D - DISTANCE BETWEEN GROUND SURFACE AND TOP OF THE TEST ZONE	=	319.6	FT
PIP - PACKER INFLATION PRESSURE (D PSI + **50 PSI**)	=	220	PSI
H1- DISTANCE BETWEEN WATER PRESSURE GAUGE AND GROUND SURFACE	=	286.2	FT
H2- DISTANCE BETWEEN GROUND SURFACE AND GROUND WATER TABLE	=	13.26	FT

NOTE: Only the top packer was inflated for this test. The interval tested here may be considered from 319.6' b/g to bottom of well.

GZA

BORING NO. /TEST NO. MW-67 T2B CH

PACKER TEST LOG

GZA GEOENVIRONMENTAL OF NEW YORK 440 NINTH AVENUE, 18th FLOOR NEW YORK, NEW YORK 10001 SCIENTISTS AND ENGINEERS	Client Entergy Indian Point Energy Cente Buchanan, NY	BORING NO./TEST NO.	MW-67 T3
		SHEET	1 of 1
		FILE NO.	41.0017869.01
		PROJECT LOCATION	Indian Point

CONTRACTOR	Aquifer Drilling & Testing, Inc.	BORING COORDINATES	N 463127.0611	E 604426.6654	
FOREMAN	Dave Carter	GROUND SURFACE EL.(FT)	14.356	DATUM	NGVD 29
GZA ENG.	Sara Covelli	FINAL BORING DEPTH (FT)	347.9	DATE START/END	8/9/07
DIAMETER OF DRILLED BOREHOLE	3.83 INCH	GROUND WATER DEPTH (STATIC WATER LEVEL DEPTH)	13.12	(below grade)	Casing is 0.15 ft above ground.
I.D. OF DRILLING RODS	2 INCH				

TESTED INTERVAL FROM / TO (FT)	TIME (HR:MIN)	ELAPSED TIME (Δt MIN)	DEPTH UNDER WATER (FT)	DEPTH TO WATER (FT)	CUMULATIVE RECOVERY (ΔH FT)	RECOVERY RATE (ΔH/Δt)
315.1 - 329.9	12:07:00	0.0	251.359	29.74	0.00	-
L= 14.8 ft	12:07:30	0.5	254.123	26.98	2.76	5.52800
	12:08:00	1.0	257.211	23.89	5.85	5.85200
	12:08:30	1.5	259.293	21.81	7.93	5.28933
	12:09:00	2.0	260.981	20.12	9.62	4.81100
	12:10:00	3.0	263.386	17.71	12.03	4.00900
	12:11:00	4.0	265.11	15.99	13.75	3.43775
	12:12:00	5.0	266.187	14.91	14.83	2.96560
	12:13:00	6.0	266.977	14.12	15.62	2.60300
	12:14:00	7.0	267.48	13.62	16.12	2.30300
	12:15:00	8.0	267.839	13.26	16.48	2.06000
	12:16:00	9.0	268.054	13.05	16.70	1.85500

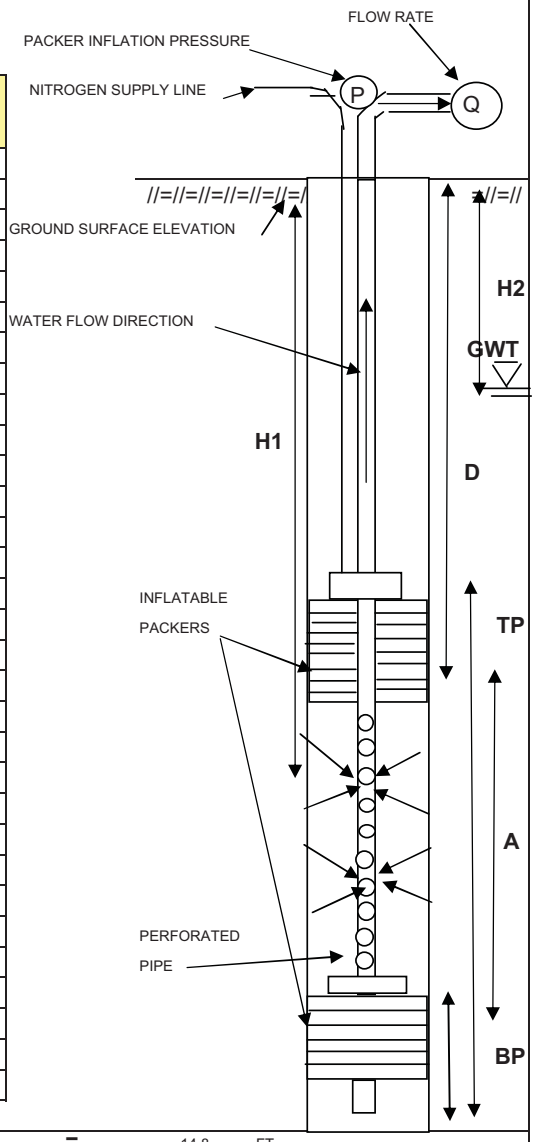

LEGEND:				
	A - TOTAL LENGTH OF TEST SECTION (FT)	=	14.8	FT
	TP - TOTAL LENGTH OF TOP PACKER AND ASSEMBLY	=	19.9	FT
	BP - TOTAL LENGTH OF BOTTOM PACKER AND ASSEMBLY	=	3.85	FT
	D - DISTANCE BETWEEN GROUND SURFACE AND TOP OF THE TEST ZONE	=	315.1	FT
	PIP - PACKER INFLATION PRESSURE (D PSI **+ 50 PSI**)	=	225	PSI
	H1- DISTANCE BETWEEN WATER PRESSURE GAUGE AND GROUND SURFACE	=	281.1	FT
	H2- DISTANCE BETWEEN GROUND SURFACE AND GROUND WATER TABLE	=	13.12	FT

GZA

BORING NO. /TEST NO. MW-67 T3

PACKER TEST LOG

GZA GEOENVIRONMENTAL OF NEW YORK 440 NINTH AVENUE, 18th FLOOR NEW YORK, NEW YORK 10001 SCIENTISTS AND ENGINEERS	Client Entergy Indian Point Energy Cente Buchanan, NY	BORING NO./TEST NO. MW-67 T3 CH SHEET 1 of 1 FILE NO. 41.0017869.01 PROJECT LOCATION Indian Point

CONTRACTOR	Aquifer Drilling & Testing, Inc.	BORING COORDINATES	N 463127.0611 E 604426.6654
FOREMAN	Dave Carter	GROUND SURFACE EL.(FT)	14.356 DATUM NGVD 29
GZA ENG.	Sara Covelli	FINAL BORING DEPTH (FT)	347.9 DATE START/END 8/9/07
DIAMETER OF DRILLED BOREHOLE	3.83 INCH	GROUND WATER DEPTH (STATIC WATER LEVEL DEPTH)	13.12 (below grade) Casing is 0.15 ft above ground.
I.D. OF DRILLING RODS	2 INCH		

TESTED INTERVAL FROM / TO (FT)	TIME (HR:MIN:SEC)	ELAPSED TIME (Δt MIN)	DEPTH UNDER WATER (FT)	DEPTH TO WATER (FT)	DRAWDOWN (ΔH FT)	PUMPING RATE (gal/min)	SPECIFIC CAPACITY (gpm/ft)
315.1 - 329.9	13:25	0	247.482	33.62	20.498	1.500	0.073
L= 14.8 ft	13:26	1	247.303	33.80	20.677	1.500	0.073
	13:27	2	247.231	33.87	20.749	1.500	0.072
	13:28	3	247.195	33.91	20.785	1.500	0.072
	13:29	4	247.159	33.94	20.821	1.500	0.072
	13:30	5	247.124	33.98	20.856	1.500	0.072
	13:31	6	247.088	34.01	20.892	1.500	0.072
	13:32	7	247.016	34.08	20.964	1.500	0.072
	13:33	8	246.98	34.12	21	1.500	0.071
	13:34	9	246.944	34.16	21.036	1.500	0.071
	13:35	10	246.908	34.19	21.072	1.500	0.071
	13:36	11	246.836	34.26	21.144	1.500	0.071
	13:37	12	246.836	34.26	21.144	1.500	0.071
	13:38	13	246.836	34.26	21.144	1.500	0.071
	13:39	14	246.801	34.30	21.179	1.500	0.071
	13:40	15	246.765	34.34	21.215	1.500	0.071
	13:41	16	246.729	34.37	21.251	1.500	0.071
	13:42	17	246.729	34.37	21.251	1.500	0.071
	13:43	18	246.729	34.37	21.251	1.500	0.071
	13:44	19	246.693	34.41	21.287	1.500	0.070
	13:45	20	246.585	34.52	21.395	1.500	0.070
	13:46	21	246.585	34.52	21.395	1.500	0.070

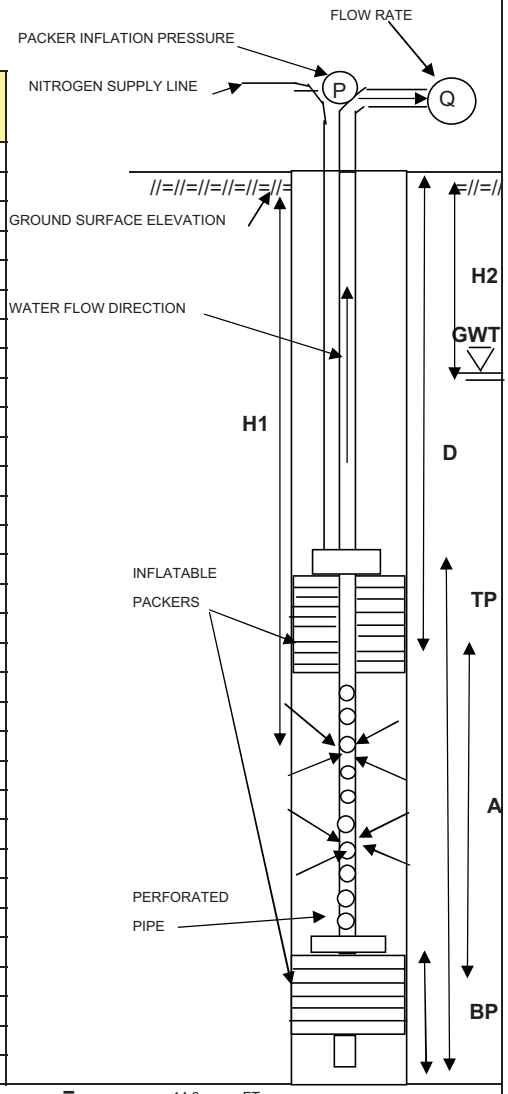

LEGEND:			
A - TOTAL LENGTH OF TEST SECTION (FT)	=	14.8	FT
TP - TOTAL LENGTH OF TOP PACKER AND ASSEMBLY	=	19.9	FT
BP - TOTAL LENGTH OF BOTTOM PACKER AND ASSEMBLY	=	3.85	FT
D - DISTANCE BETWEEN GROUND SURFACE AND TOP OF THE TEST ZONE	=	315.1	FT
PIP - PACKER INFLATION PRESSURE (D PSI + **50 PSI**)	=	225	PSI
H1- DISTANCE BETWEEN WATER PRESSURE GAUGE AND GROUND SURFACE	=	281.1	FT
H2- DISTANCE BETWEEN GROUND SURFACE AND GROUND WATER TABLE	=	13.12	FT

GZA

BORING NO. /TEST NO. MW-67 T3 CH

PACKER TEST LOG

GZA GEOENVIRONMENTAL OF NEW YORK 440 NINTH AVENUE, 18th FLOOR NEW YORK, NEW YORK 10001 SCIENTISTS AND ENGINEERS	Client Entergy Indian Point Energy Cente Buchanan, NY	BORING NO./TEST NO.	MW-67 T4
		SHEET	1 of 1
		FILE NO.	41.0017869.01
		PROJECT LOCATION	Indian Point

CONTRACTOR	Aquifer Drilling & Testing, Inc.	BORING COORDINATES	N 463127.0611	E 604426.6654	
FOREMAN	Dave Carter	GROUND SURFACE EL.(FT)	14.356	DATUM	NGVD 29
GZA ENG.	Rick Ponti	FINAL BORING DEPTH (FT)	347.9	DATE START/END	8/10/07
DIAMETER OF DRILLED BOREHOLE	3.83 INCH	GROUND WATER DEPTH (STATIC WATER LEVEL DEPTH)	12.80	(below grade)	Casing is 0.15 ft above ground.
I.D. OF DRILLING RODS	2 INCH				

TESTED INTERVAL FROM / TO (FT)	TIME (HR:MIN)	ELAPSED TIME (Δt MIN)	DEPTH UNDER WATER (FT)	DEPTH TO WATER (FT)	CUMULATIVE RECOVERY (ΔH FT)	RECOVERY RATE (ΔH/Δt)
308.1-322.9	11:28:30	0.0	206.62	69.08	0.00	-
L= 14.8 ft	11:29:00	0.5	212.286	63.41	5.67	11.33200
	11:29:30	1.0	215.514	60.19	8.89	8.89400
	11:30:00	1.5	218.132	57.57	11.51	7.67467
	11:30:30	2.0	220.643	55.06	14.02	7.01150
	11:31:30	3.0	225.27	50.43	18.65	6.21667
	11:32:30	4.0	229.432	46.27	22.81	5.70300
	11:33:30	5.0	233.235	42.47	26.62	5.32300
	11:34:30	6.0	236.644	39.06	30.02	5.00400
	11:35:30	7.0	239.766	35.93	33.15	4.73514
	11:36:30	8.0	242.494	33.21	35.87	4.48425
	11:37:30	9.0	245.006	30.69	38.39	4.26511
	11:38:30	10.0	247.195	28.51	40.58	4.05750
	11:39:30	11.0	249.134	26.57	42.51	3.86491
	11:40:30	12.0	250.892	24.81	44.27	3.68933
	11:41:30	13.0	252.436	23.26	45.82	3.52431
	11:42:30	14.0	253.8	21.90	47.18	3.37000
	11:43:30	15.0	255.021	20.68	48.40	3.22673
	11:44:30	16.0	256.026	19.67	49.41	3.08788
	11:45:30	17.0	256.959	18.74	50.34	2.96112
	11:46:30	18.0	257.749	17.95	51.13	2.84050
	11:47:30	19.0	258.467	17.23	51.85	2.72879
	11:48:30	20.0	259.078	16.62	52.46	2.62290
	11:49:30	21.0	259.544	16.16	52.92	2.52019
	11:50:30	22.0	260.047	15.65	53.43	2.42850
	11:51:30	23.0	260.406	15.29	53.79	2.33852
	11:52:30	24.0	260.765	14.94	54.15	2.25604
	11:53:30	25.0	261.016	14.68	54.40	2.17584
	11:58:30	30.0	261.914	13.79	55.29	1.84313
	12:05:30	35.0	262.489	13.21	55.87	1.59626

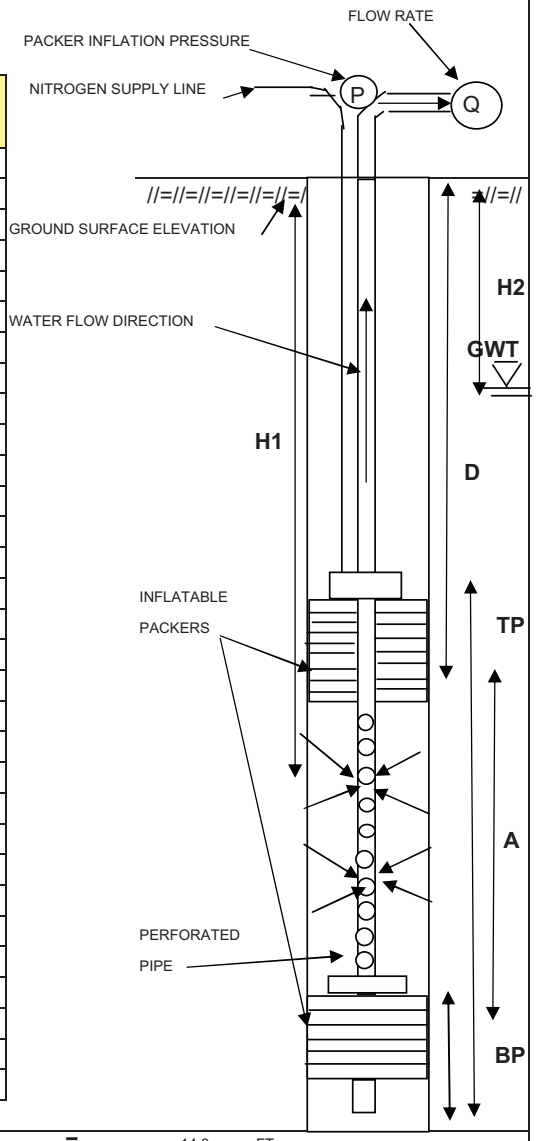

LEGEND:				
	A - TOTAL LENGTH OF TEST SECTION (FT)	=	14.8	FT
	TP - TOTAL LENGTH OF TOP PACKER AND ASSEMBLY	=	19.9	FT
	BP - TOTAL LENGTH OF BOTTOM PACKER AND ASSEMBLY	=	3.85	FT
	D - DISTANCE BETWEEN GROUND SURFACE AND TOP OF THE TEST ZONE	=	308.1	FT
	PIP - PACKER INFLATION PRESSURE (D PSI **+ 50 PSI**)	=	225	PSI
	H1- DISTANCE BETWEEN WATER PRESSURE GAUGE AND GROUND SURFACE	=	275.7	FT
	H2- DISTANCE BETWEEN GROUND SURFACE AND GROUND WATER TABLE	=	12.80	FT

NOTE: Test zone was purged for 45 minutes before pump was turned off for recovery.

PACKER TEST LOG

GZA GEOENVIRONMENTAL OF NEW YORK 440 NINTH AVENUE, 18th FLOOR NEW YORK, NEW YORK 10001 SCIENTISTS AND ENGINEERS	Client Entergy Indian Point Energy Cente Buchanan, NY	BORING NO./TEST NO. MW-67 T4 CH SHEET 1 of 1 FILE NO. 41.0017869.01 PROJECT LOCATION Indian Point

CONTRACTOR	Aquifer Drilling & Testing, Inc.	BORING COORDINATES	N 463127.0611	E 604426.6654	
FOREMAN	Dave Carter	GROUND SURFACE EL.(FT)	14.356	DATUM	NGVD 29
GZA ENG.	Rick Ponti	FINAL BORING DEPTH (FT)	347.9	DATE START/END	8/10/07
DIAMETER OF DRILLED BOREHOLE	3.83 INCH	GROUND WATER DEPTH (STATIC WATER LEVEL DEPTH)	12.80 (below grade)	Casing is 0.15 ft above ground.	
I.D. OF DRILLING RODS	2 INCH				

TESTED INTERVAL FROM / TO (FT)	TIME (HR:MIN:SEC)	ELAPSED TIME (Δt MIN)	DEPTH UNDER WATER (FT)	DEPTH TO WATER (FT)	DRAWDOWN (ΔH FT)	PUMPING RATE (gal/min)	SPECIFIC CAPACITY (gpm/ft)
308.1-322.9	11:23	0	207.553	68.15	55.347	1.300	0.023
L= 14.8 ft	11:24	1	207.624	68.08	55.276	1.300	0.024
	11:25	2	207.732	67.97	55.168	1.300	0.024
	11:26	3	207.66	68.04	55.24	1.300	0.024
	11:27	4	207.768	67.93	55.132	1.300	0.024

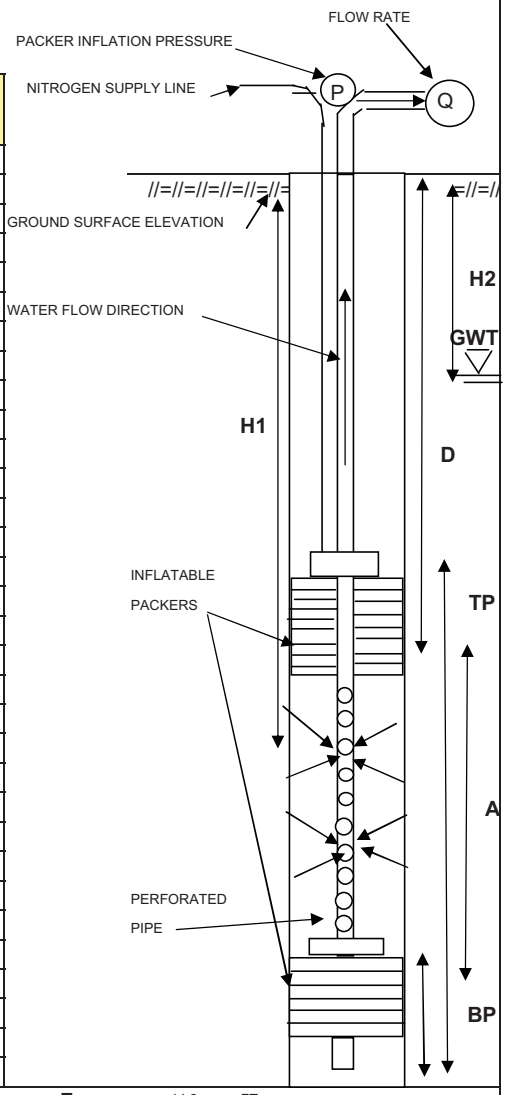

LEGEND:			
A - TOTAL LENGTH OF TEST SECTION (FT)	=	14.8	FT
TP - TOTAL LENGTH OF TOP PACKER AND ASSEMBLY	=	19.9	FT
BP - TOTAL LENGTH OF BOTTOM PACKER AND ASSEMBLY	=	3.85	FT
D - DISTANCE BETWEEN GROUND SURFACE AND TOP OF THE TEST ZONE	=	308.1	FT
PIP - PACKER INFLATION PRESSURE (D PSI + **50 PSI**)	=	225	PSI
H1- DISTANCE BETWEEN WATER PRESSURE GAUGE AND GROUND SURFACE	=	275.7	FT
H2- DISTANCE BETWEEN GROUND SURFACE AND GROUND WATER TABLE	=	12.80	FT

Note: This test may not be valid due to short duration of drawdown stabilization.

GZA

BORING NO. /TEST NO. MW-67 T4 CH

PACKER TEST LOG

GZA GEOENVIRONMENTAL OF NEW YORK 440 NINTH AVENUE, 18th FLOOR NEW YORK, NEW YORK 10001 SCIENTISTS AND ENGINEERS	Client Entergy Indian Point Energy Cente Buchanan, NY	BORING NO./TEST NO.	MW-67 T4A
		SHEET	1 of 1
		FILE NO.	41.0017869.01
		PROJECT LOCATION	Indian Point

CONTRACTOR	Aquifer Drilling & Testing, Inc.	BORING COORDINATES	N 463127.0611	E 604426.6654	
FOREMAN	Dave Carter	GROUND SURFACE EL.(FT)	14.356	DATUM	NGVD 29
GZA ENG.	Rick Ponti	FINAL BORING DEPTH (FT)	347.9	DATE START/END	8/14/07
DIAMETER OF DRILLED BOREHOLE	3.83 INCH	GROUND WATER DEPTH (STATIC WATER LEVEL DEPTH)	13.04	(below grade)	Casing is 0.15 ft above ground.
I.D. OF DRILLING RODS	2 INCH				

TESTED INTERVAL FROM / TO (FT)	TIME (HR:MIN)	ELAPSED TIME (Δt MIN)	DEPTH UNDER WATER (FT)	DEPTH TO WATER (FT)	CUMULATIVE RECOVERY (ΔH FT)	RECOVERY RATE (ΔH/Δt)
308.1-322.9	11:10:30	0.0	242.709	31.98	0.00	-
L= 14.8 ft	11:11:00	0.5	245.58	29.11	2.87	5.74200
	11:11:30	1.0	246.98	27.71	4.27	4.27100
	11:12:00	1.5	248.164	26.53	5.45	3.63667
	11:12:30	2.0	249.241	25.45	6.53	3.26600
	11:13:30	3.0	251.18	23.51	8.47	2.82367
	11:14:30	4.0	252.867	21.82	10.16	2.53950
	11:15:30	5.0	254.339	20.35	11.63	2.32600
	11:16:30	6.0	255.523	19.17	12.81	2.13567
	11:17:30	7.0	256.529	18.16	13.82	1.97429
	11:18:30	8.0	257.426	17.26	14.72	1.83963
	11:19:30	9.0	258.144	16.55	15.44	1.71500
	11:20:30	10.0	258.826	15.86	16.12	1.61170
	11:21:30	11.0	259.329	15.36	16.62	1.51091
	11:22:30	12.0	259.76	14.93	17.05	1.42092
	11:23:30	13.0	260.155	14.54	17.45	1.34200
	11:24:30	14.0	260.442	14.25	17.73	1.26664
	11:25:30	15.0	260.729	13.96	18.02	1.20133
	11:26:30	16.0	260.945	13.75	18.24	1.13975
	11:27:30	17.0	261.124	13.57	18.42	1.08324
	11:28:30	18.0	261.304	13.39	18.60	1.03306
	11:29:30	19.0	261.447	13.24	18.74	0.98621
	11:30:30	20.0	261.555	13.14	18.85	0.94230
	11:31:30	21.0	261.663	13.03	18.95	0.90257
	11:32:30	22.0	261.735	12.96	19.03	0.86482
	11:33:30	23.0	261.77	12.92	19.06	0.82874
	11:34:30	24.0	262.489	12.20	19.78	0.82417
	11:35:30	25.0	261.842	12.85	19.13	0.76532

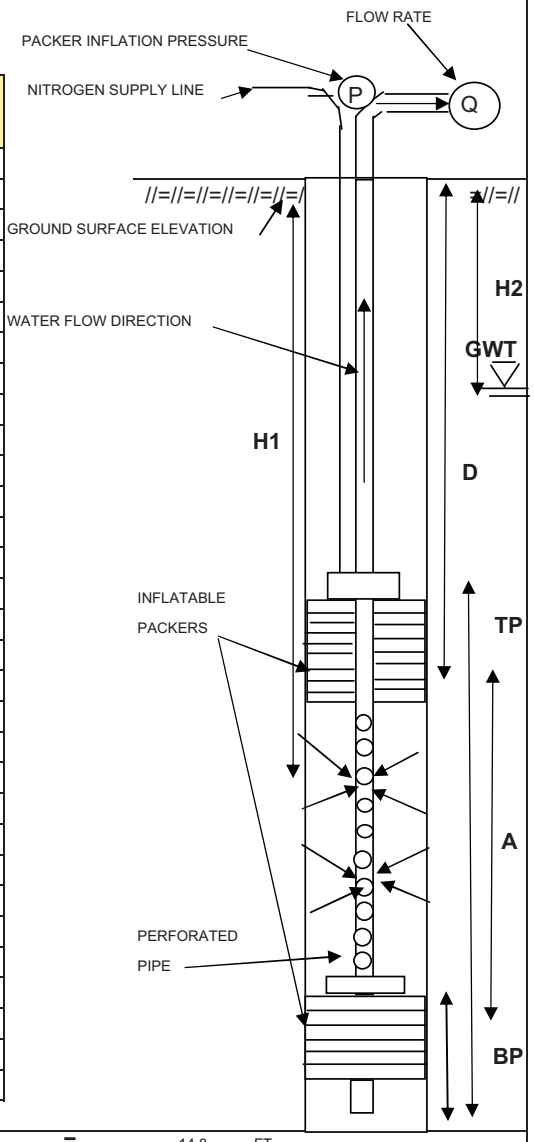

LEGEND:				
	A - TOTAL LENGTH OF TEST SECTION (FT)	=	14.8	FT
	TP - TOTAL LENGTH OF TOP PACKER AND ASSEMBLY	=	19.9	FT
	BP - TOTAL LENGTH OF BOTTOM PACKER AND ASSEMBLY	=	3.85	FT
	D - DISTANCE BETWEEN GROUND SURFACE AND TOP OF THE TEST ZONE	=	308.1	FT
	PIP - PACKER INFLATION PRESSURE (D PSI **+ 50 PSI**)	=	225	PSI
	H1- DISTANCE BETWEEN WATER PRESSURE GAUGE AND GROUND SURFACE	=	274.7	FT
	H2- DISTANCE BETWEEN GROUND SURFACE AND GROUND WATER TABLE	=	13.04	FT

GZA

BORING NO. /TEST NO. MW-67 T4A

PACKER TEST LOG

GZA GEOENVIRONMENTAL OF NEW YORK 440 NINTH AVENUE, 18th FLOOR NEW YORK, NEW YORK 10001 SCIENTISTS AND ENGINEERS	Client Entergy Indian Point Energy Cente Buchanan, NY	BORING NO./TEST NO. MW-67 T4A CH SHEET 1 of 1 FILE NO. 41.0017869.01 PROJECT LOCATION Indian Point

CONTRACTOR	Aquifer Drilling & Testing, Inc.	BORING COORDINATES	N 463127.0611 E 604426.6654
FOREMAN	Dave Carter	GROUND SURFACE EL.(FT)	14.356 DATUM NGVD 29
GZA ENG.	Rick Ponti	FINAL BORING DEPTH (FT)	347.9 DATE START/END 8/14/07
DIAMETER OF DRILLED BOREHOLE	3.83 INCH	GROUND WATER DEPTH (STATIC WATER LEVEL DEPTH)	13.04 (below grade) Casing is 0.15 ft above ground.
I.D. OF DRILLING RODS	2 INCH		

TESTED INTERVAL FROM / TO (FT)	TIME (HR:MIN:SEC)	ELAPSED TIME (Δt MIN)	DEPTH UNDER WATER (FT)	DEPTH TO WATER (FT)	DRAWDOWN (ΔH FT)	PUMPING RATE (gal/min)	SPECIFIC CAPACITY (gpm/ft)
308.1-322.9	12:03	0	212.968	61.72	48.682	1.100	0.023
L= 14.8 ft	12:04	1	212.896	61.79	48.754	1.100	0.023
	12:05	2	212.824	61.87	48.826	1.100	0.023
	12:06	3	212.716	61.97	48.934	1.100	0.022
	12:07	4	212.752	61.94	48.898	1.100	0.022
	12:08	5	212.824	61.87	48.826	1.100	0.023
	12:09	6	212.968	61.72	48.682	1.100	0.023
	12:10	7	213.039	61.65	48.611	1.100	0.023
	12:11	8	212.788	61.90	48.862	1.100	0.023
	12:12	9	212.932	61.76	48.718	1.100	0.023
	12:13	10	212.716	61.97	48.934	1.100	0.022
	12:14	11	212.645	62.05	49.005	1.100	0.022
	12:15	12	212.609	62.08	49.041	1.100	0.022

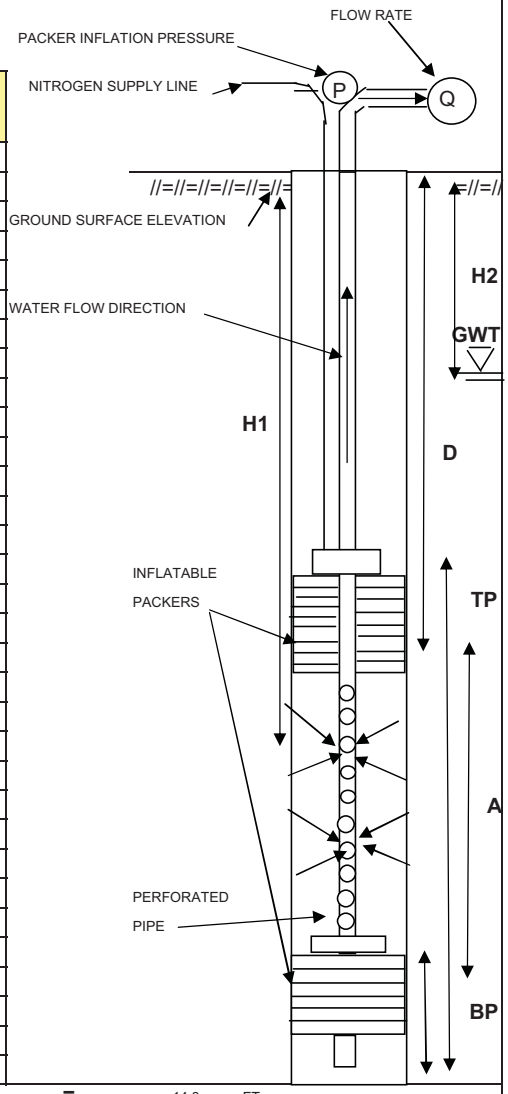

LEGEND:			
A - TOTAL LENGTH OF TEST SECTION (FT)	=	14.8	FT
TP - TOTAL LENGTH OF TOP PACKER AND ASSEMBLY	=	19.9	FT
BP - TOTAL LENGTH OF BOTTOM PACKER AND ASSEMBLY	=	3.85	FT
D - DISTANCE BETWEEN GROUND SURFACE AND TOP OF THE TEST ZONE	=	308.1	FT
PIP - PACKER INFLATION PRESSURE (D PSI + **50 PSI**)	=	225	PSI
H1- DISTANCE BETWEEN WATER PRESSURE GAUGE AND GROUND SURFACE	=	274.7	FT
H2- DISTANCE BETWEEN GROUND SURFACE AND GROUND WATER TABLE	=	13.04	FT

GZA

BORING NO. /TEST NO. MW-67 T4A CH

PACKER TEST LOG

GZA GEOENVIRONMENTAL OF NEW YORK 440 NINTH AVENUE, 18th FLOOR NEW YORK, NEW YORK 10001 SCIENTISTS AND ENGINEERS	Client Entergy Indian Point Energy Cente Buchanan, NY	BORING NO./TEST NO.	MW-67 T5A
		SHEET	1 of 1
		FILE NO.	41.0017869.01
		PROJECT LOCATION	Indian Point

CONTRACTOR	Aquifer Drilling & Testing, Inc.	BORING COORDINATES	N 463127.0611	E 604426.6654	
FOREMAN	Dave Carter	GROUND SURFACE EL.(FT)	14.356	DATUM	NGVD 29
GZA ENG.	Rick Ponti	FINAL BORING DEPTH (FT)	347.9	DATE START/END	8/13/07
DIAMETER OF DRILLED BOREHOLE	3.83 INCH	GROUND WATER DEPTH (STATIC WATER LEVEL DEPTH)	12.78	(below grade)	Casing is 0.15 ft above ground.
I.D. OF DRILLING RODS	2 INCH				

TESTED INTERVAL FROM / TO (FT)	TIME (HR:MIN)	ELAPSED TIME (Δt MIN)	DEPTH UNDER WATER (FT)	DEPTH TO WATER (FT)	CUMULATIVE RECOVERY (ΔH FT)	RECOVERY RATE (ΔH/Δt)
296.6-311.4	14:49:00	0.0	238.51	25.30	0.00	-
L= 14.8 ft	14:49:30	0.5	241.812	22.00	3.30	6.60400
	14:50:00	1.0	244.324	19.49	5.81	5.81400
	14:50:30	1.5	245.867	17.94	7.36	4.90467
	14:51:00	2.0	247.016	16.79	8.51	4.25300
	14:52:00	3.0	248.631	15.18	10.12	3.37367
	14:53:00	4.0	249.528	14.28	11.02	2.75450
	14:54:00	5.0	249.995	13.82	11.49	2.29700
	14:55:00	6.0	251.072	12.74	12.56	2.09367

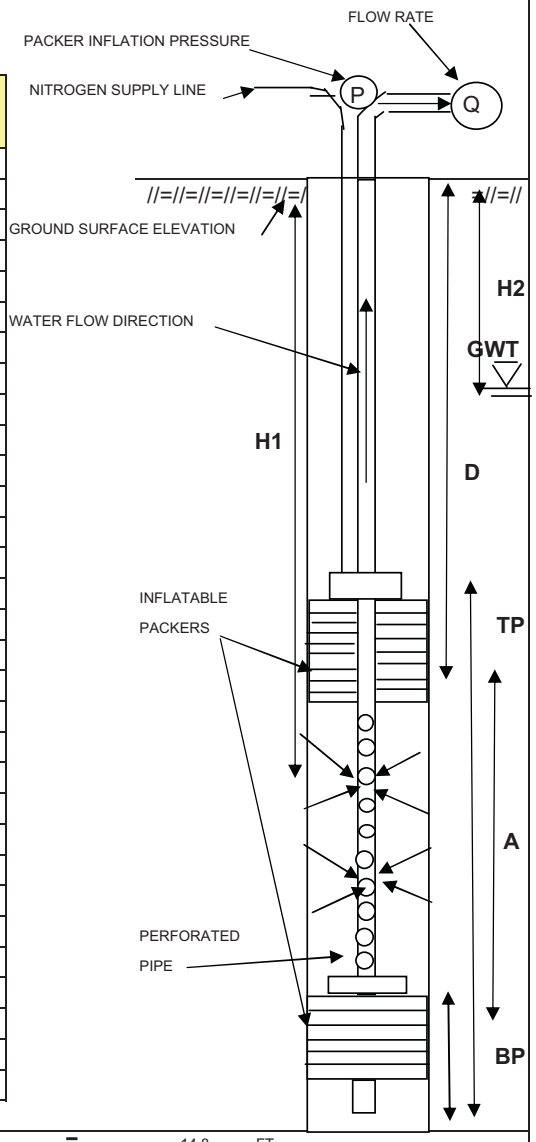

LEGEND:				
	A - TOTAL LENGTH OF TEST SECTION (FT)	=	14.8	FT
	TP - TOTAL LENGTH OF TOP PACKER AND ASSEMBLY	=	19.9	FT
	BP - TOTAL LENGTH OF BOTTOM PACKER AND ASSEMBLY	=	3.85	FT
	D - DISTANCE BETWEEN GROUND SURFACE AND TOP OF THE TEST ZONE	=	296.6	FT
	PIP - PACKER INFLATION PRESSURE (D PSI **+ 50 PSI**)	=	225	PSI
	H1- DISTANCE BETWEEN WATER PRESSURE GAUGE AND GROUND SURFACE	=	263.8	FT
	H2- DISTANCE BETWEEN GROUND SURFACE AND GROUND WATER TABLE	=	12.78	FT

GZA

BORING NO. /TEST NO. MW-67 T5A

PACKER TEST LOG

GZA GEOENVIRONMENTAL OF NEW YORK 440 NINTH AVENUE, 18th FLOOR NEW YORK, NEW YORK 10001 SCIENTISTS AND ENGINEERS	Client Entergy Indian Point Energy Cente Buchanan, NY	BORING NO./TEST NO. MW-67 T5A CH SHEET 1 of 1 FILE NO. 41.0017869.01 PROJECT LOCATION Indian Point

CONTRACTOR	Aquifer Drilling & Testing, Inc.	BORING COORDINATES	N 463127.0611	E 604426.6654	
FOREMAN	Dave Carter	GROUND SURFACE EL.(FT)	14.356	DATUM	NGVD 29
GZA ENG.	Rick Ponti	FINAL BORING DEPTH (FT)	347.9	DATE START/END	8/13/07
DIAMETER OF DRILLED BOREHOLE	3.83 INCH	GROUND WATER DEPTH (STATIC WATER LEVEL DEPTH)	12.78 (below grade)	Casing is 0.15 ft above ground.	
I.D. OF DRILLING RODS	2 INCH				

TESTED INTERVAL FROM / TO (FT)	TIME (HR:MIN:SEC)	ELAPSED TIME (Δt MIN)	DEPTH UNDER WATER (FT)	DEPTH TO WATER (FT)	DRAWDOWN (ΔH FT)	PUMPING RATE (gal/min)	SPECIFIC CAPACITY (gpm/ft)
296.6-311.4	15:03	0	239.048	24.76	11.982	1.300	0.108
L= 14.8 ft	15:04	1	239.048	24.76	11.982	1.300	0.108
	15:05	2	238.725	25.09	12.305	1.300	0.106
	15:06	3	239.013	24.80	12.017	1.300	0.108
	15:07	4	238.618	25.19	12.412	1.300	0.105

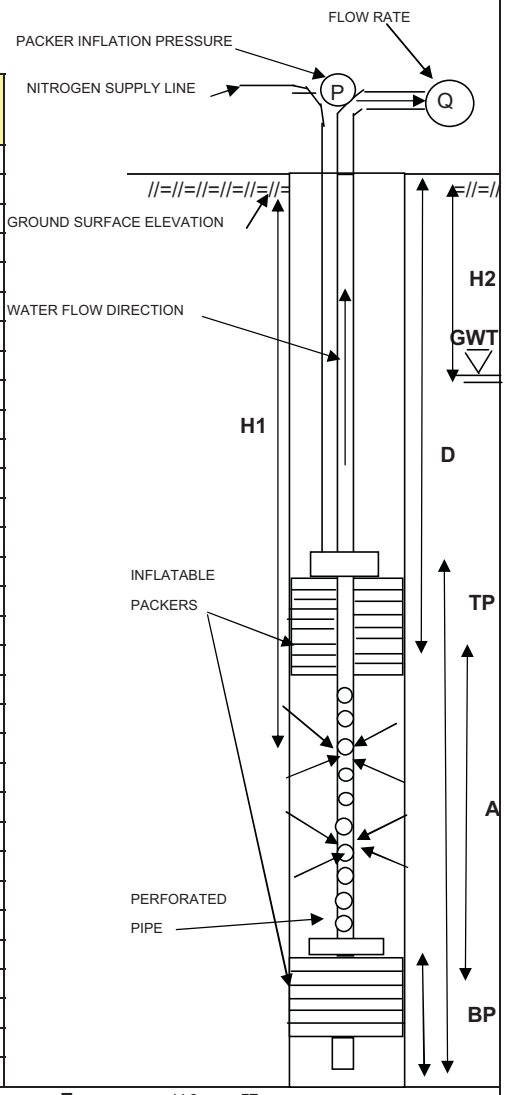

LEGEND:				
A - TOTAL LENGTH OF TEST SECTION (FT)	=	14.8	FT
TP - TOTAL LENGTH OF TOP PACKER AND ASSEMBLY	=	19.9	FT
BP - TOTAL LENGTH OF BOTTOM PACKER AND ASSEMBLY	=	3.85	FT
D - DISTANCE BETWEEN GROUND SURFACE AND TOP OF THE TEST ZONE	=	296.6	FT
PIP - PACKER INFLATION PRESSURE (D PSI + **50 PSI**)	=	225	PSI
H1- DISTANCE BETWEEN WATER PRESSURE GAUGE AND GROUND SURFACE	=	263.8	FT
H2- DISTANCE BETWEEN GROUND SURFACE AND GROUND WATER TABLE	=	12.78	FT

Note: Due to short duration of stabilized drawdown, test may not be valid.

PACKER TEST LOG

GZA GEOENVIRONMENTAL OF NEW YORK 440 NINTH AVENUE, 18th FLOOR NEW YORK, NEW YORK 10001 SCIENTISTS AND ENGINEERS	Client Entergy Indian Point Energy Cente Buchanan, NY	BORING NO./TEST NO.	MW-67 T6
		SHEET	1 of 1
		FILE NO.	41.0017869.01
		PROJECT LOCATION	Indian Point

CONTRACTOR	Aquifer Drilling & Testing, Inc.	BORING COORDINATES	N 463127.0611	E 604426.6654	
FOREMAN	Dave Carter	GROUND SURFACE EL.(FT)	14.356	DATUM	NGVD 29
GZA ENG.	Rick Ponti	FINAL BORING DEPTH (FT)	347.9	DATE START/END	8/14/07
DIAMETER OF DRILLED BOREHOLE	3.83 INCH	GROUND WATER DEPTH (STATIC WATER LEVEL DEPTH)	12.04	(below grade)	Casing is 0.15 ft above ground.
I.D. OF DRILLING RODS	2 INCH				

TESTED INTERVAL FROM / TO (FT)	TIME (HR:MIN)	ELAPSED TIME (Δt MIN)	DEPTH UNDER WATER (FT)	DEPTH TO WATER (FT)	CUMULATIVE RECOVERY (ΔH FT)	RECOVERY RATE (ΔH/Δt)
284.6-299.4	14:39:30	0.0	216.841	34.50	0.00	-
L= 14.8 ft	14:40:00	0.5	220.356	30.98	3.51	7.03000
	14:40:30	1.0	222.652	28.69	5.81	5.81100
	14:41:00	1.5	224.374	26.97	7.53	5.02200
	14:41:30	2.0	225.952	25.39	9.11	4.55550
	14:42:30	3.0	228.643	22.70	11.80	3.93400
	14:43:30	4.0	228.212	23.13	11.37	2.84275
	14:44:30	5.0	230.867	20.47	14.03	2.80520
	14:45:30	6.0	233.773	17.57	16.93	2.82200
	14:46:30	7.0	234.922	16.42	18.08	2.58300
	14:47:30	8.0	235.891	15.45	19.05	2.38125
	14:48:30	9.0	236.536	14.80	19.70	2.18833

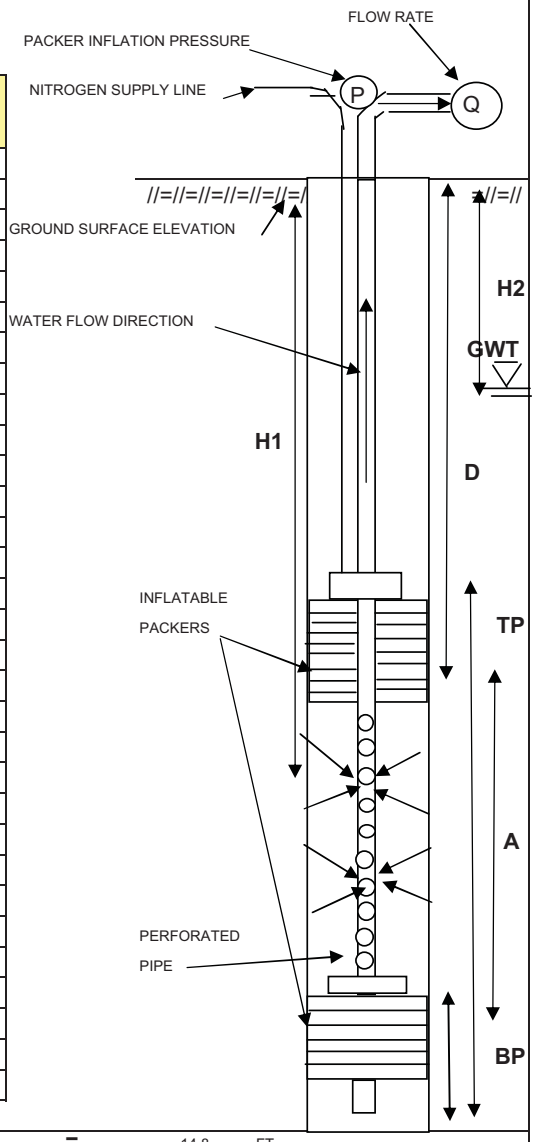

LEGEND:				
	A - TOTAL LENGTH OF TEST SECTION (FT)	=	14.8	FT
	TP - TOTAL LENGTH OF TOP PACKER AND ASSEMBLY	=	19.9	FT
	BP - TOTAL LENGTH OF BOTTOM PACKER AND ASSEMBLY	=	3.85	FT
	D - DISTANCE BETWEEN GROUND SURFACE AND TOP OF THE TEST ZONE	=	284.6	FT
	PIP - PACKER INFLATION PRESSURE (D PSI **+ 50 PSI**)	=	225	PSI
	H1- DISTANCE BETWEEN WATER PRESSURE GAUGE AND GROUND SURFACE	=	251.3	FT
	H2- DISTANCE BETWEEN GROUND SURFACE AND GROUND WATER TABLE	=	12.04	FT

GZA

BORING NO. /TEST NO. MW-67 T6

PACKER TEST LOG

GZA GEOENVIRONMENTAL OF NEW YORK 440 NINTH AVENUE, 18th FLOOR NEW YORK, NEW YORK 10001 SCIENTISTS AND ENGINEERS	Client Entergy Indian Point Energy Cente Buchanan, NY	BORING NO./TEST NO. MW-67 T6 CH SHEET 1 of 1 FILE NO. 41.0017869.01 PROJECT LOCATION Indian Point

CONTRACTOR	Aquifer Drilling & Testing, Inc.	BORING COORDINATES	N 463127.0611 E 604426.6654
FOREMAN	Dave Carter	GROUND SURFACE EL.(FT)	14.356 DATUM NGVD 29
GZA ENG.	Rick Ponti	FINAL BORING DEPTH (FT)	347.9 DATE START/END 8/14/07
DIAMETER OF DRILLED BOREHOLE	3.83 INCH	GROUND WATER DEPTH (STATIC WATER LEVEL DEPTH)	12.04 (below grade) Casing is 0.15 ft above ground.
I.D. OF DRILLING RODS	2 INCH		

TESTED INTERVAL FROM / TO (FT)	TIME (HR:MIN:SEC)	ELAPSED TIME (Δt MIN)	DEPTH UNDER WATER (FT)	DEPTH TO WATER (FT)	DRAWDOWN (ΔH FT)	PUMPING RATE (gal/min)	SPECIFIC CAPACITY (gpm/ft)
284.6-299.4	15:00	0	211.963	39.38	27.337	1.000	0.037
L= 14.8 ft	15:01	1	211.856	39.48	27.444	1.000	0.036
	15:02	2	211.82	39.52	27.48	1.000	0.036
	15:03	3	211.82	39.52	27.48	1.000	0.036
	15:04	4	211.82	39.52	27.48	1.000	0.036
	15:05	5	211.748	39.59	27.552	1.000	0.036
	15:06	6	211.712	39.63	27.588	1.000	0.036
	15:07	7	211.748	39.59	27.552	1.000	0.036
	15:08	8	211.712	39.63	27.588	1.000	0.036
	15:09	9	211.712	39.63	27.588	1.000	0.036
	15:10	10	211.712	39.63	27.588	1.000	0.036
	15:11	11	211.712	39.63	27.588	1.000	0.036
	15:12	12	211.712	39.63	27.588	1.000	0.036
	15:13	13	211.748	39.59	27.552	1.000	0.036
	15:14	14	211.748	39.59	27.552	1.000	0.036
	15:15	15	211.676	39.66	27.624	1.000	0.036
	15:16	16	211.605	39.74	27.695	1.000	0.036
	15:17	17	211.569	39.77	27.731	1.000	0.036
	15:18	18	211.605	39.74	27.695	1.000	0.036

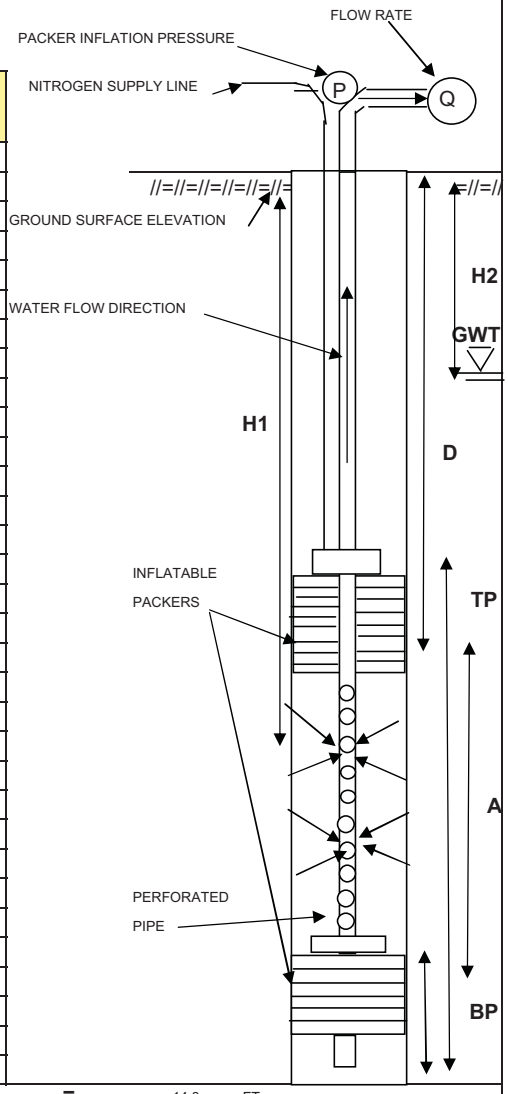

LEGEND:			
A - TOTAL LENGTH OF TEST SECTION (FT)	=	14.8	FT
TP - TOTAL LENGTH OF TOP PACKER AND ASSEMBLY	=	19.9	FT
BP - TOTAL LENGTH OF BOTTOM PACKER AND ASSEMBLY	=	3.85	FT
D - DISTANCE BETWEEN GROUND SURFACE AND TOP OF THE TEST ZONE	=	284.6	FT
PIP - PACKER INFLATION PRESSURE (D PSI + **50 PSI**)	=	225	PSI
H1- DISTANCE BETWEEN WATER PRESSURE GAUGE AND GROUND SURFACE	=	251.3	FT
H2- DISTANCE BETWEEN GROUND SURFACE AND GROUND WATER TABLE	=	12.04	FT

GZA

BORING NO. /TEST NO. MW-67 T6 CH

PACKER TEST LOG

GZA GEOENVIRONMENTAL OF NEW YORK 440 NINTH AVENUE, 18th FLOOR NEW YORK, NEW YORK 10001 SCIENTISTS AND ENGINEERS	Client Entergy Indian Point Energy Cente Buchanan, NY	BORING NO./TEST NO. MW-67 T7 CH SHEET 1 of 1 FILE NO. 41.0017869.01 PROJECT LOCATION Indian Point

CONTRACTOR	Aquifer Drilling & Testing, Inc.	BORING COORDINATES	N 463127.0611 E 604426.6654
FOREMAN	Dave Carter	GROUND SURFACE EL.(FT)	14.356 DATUM NGVD 29
GZA ENG.	Rick Ponti	FINAL BORING DEPTH (FT)	347.9 DATE START/END 8/15/07
DIAMETER OF DRILLED BOREHOLE	3.83 INCH	GROUND WATER DEPTH (STATIC WATER LEVEL DEPTH)	13.22 (below grade) Casing is 0.15 ft above ground.
I.D. OF DRILLING RODS	2 INCH		

TESTED INTERVAL FROM / TO (FT)	TIME (HR:MIN:SEC)	ELAPSED TIME (Δt MIN)	DEPTH UNDER WATER (FT)	DEPTH TO WATER (FT)	DRAWDOWN (ΔH FT)	PUMPING RATE (gal/min)	SPECIFIC CAPACITY (gpm/ft)
273.6-288.4	11:12	0	225.701	14.56	1.339	1.700	1.270
L= 14.8 ft	11:13	1	225.593	14.67	1.447	1.700	1.175
	11:14	2	225.486	14.77	1.554	1.700	1.094
	11:15	3	225.486	14.77	1.554	1.700	1.094
	11:16	4	225.45	14.81	1.59	1.700	1.069
	11:17	5	225.414	14.85	1.626	1.700	1.046
	11:18	6	225.414	14.85	1.626	1.700	1.046
	11:19	7	225.378	14.88	1.662	1.700	1.023
	11:20	8	225.378	14.88	1.662	1.700	1.023
	11:21	9	225.378	14.88	1.662	1.700	1.023
	11:22	10	225.342	14.92	1.698	1.700	1.001
	11:23	11	225.378	14.88	1.662	1.700	1.023
	11:24	12	225.342	14.92	1.698	1.700	1.001
	11:25	13	225.378	14.88	1.662	1.700	1.023
	11:26	14	225.342	14.92	1.698	1.700	1.001
	11:27	15	225.27	14.99	1.77	1.700	0.960
	11:28	16	225.306	14.95	1.734	1.700	0.980
	11:29	17	225.306	14.95	1.734	1.700	0.980
	11:30	18	225.306	14.95	1.734	1.700	0.980
	11:31	19	225.342	14.92	1.698	1.700	1.001
	11:32	20	225.306	14.95	1.734	1.700	0.980
	11:33	21	225.342	14.92	1.698	1.700	1.001
	11:34	22	225.306	14.95	1.734	1.700	0.980
	11:35	23	225.306	14.95	1.734	1.700	0.980
	11:36	24	225.342	14.92	1.698	1.700	1.001
	11:37	25	225.342	14.92	1.698	1.700	1.001
	11:38	26	225.342	14.92	1.698	1.700	1.001
	11:39	27	225.378	14.88	1.662	1.700	1.023
	11:40	28	225.342	14.92	1.698	1.700	1.001
	11:41	29	225.342	14.92	1.698	1.700	1.001
	11:42	30	225.342	14.92	1.698	1.700	1.001
	11:43	31	225.342	14.92	1.698	1.700	1.001

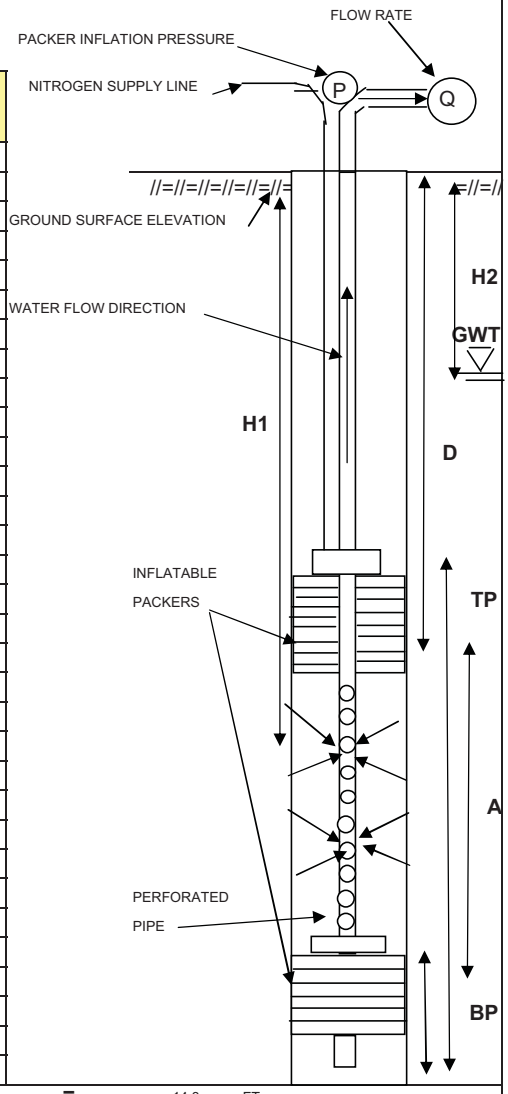

LEGEND:			
A - TOTAL LENGTH OF TEST SECTION (FT)	=	14.8	FT
TP - TOTAL LENGTH OF TOP PACKER AND ASSEMBLY	=	19.9	FT
BP - TOTAL LENGTH OF BOTTOM PACKER AND ASSEMBLY	=	3.85	FT
D - DISTANCE BETWEEN GROUND SURFACE AND TOP OF THE TEST ZONE	=	273.6	FT
PIP - PACKER INFLATION PRESSURE (D PSI + **50 PSI**)	=	225	PSI
H1- DISTANCE BETWEEN WATER PRESSURE GAUGE AND GROUND SURFACE	=	240.3	FT
H2- DISTANCE BETWEEN GROUND SURFACE AND GROUND WATER TABLE	=	13.22	FT

Note: Due to inconclusive behavior observed in groundwater levels following this test, results were not analyzed.

PACKER TEST LOG

GZA GEOENVIRONMENTAL OF NEW YORK 440 NINTH AVENUE, 18th FLOOR NEW YORK, NEW YORK 10001 SCIENTISTS AND ENGINEERS	Client Entergy Indian Point Energy Cente Buchanan, NY	BORING NO./TEST NO. MW-67 T8 CH SHEET 1 of 1 FILE NO. 41.0017869.01 PROJECT LOCATION Indian Point

CONTRACTOR	Aquifer Drilling & Testing, Inc.	BORING COORDINATES	N 463127.0611 E 604426.6654
FOREMAN	Dave Carter	GROUND SURFACE EL.(FT)	14.356 DATUM NGVD 29
GZA ENG.	Rick Ponti	FINAL BORING DEPTH (FT)	347.9 DATE START/END 8/15/07
DIAMETER OF DRILLED BOREHOLE	3.83 INCH	GROUND WATER DEPTH (STATIC WATER LEVEL DEPTH)	11.65 (below grade) Casing is 0.15 ft above ground.
I.D. OF DRILLING RODS	2 INCH		

TESTED INTERVAL FROM / TO (FT)	TIME (HR:MIN:SEC)	ELAPSED TIME (Δt MIN)	DEPTH UNDER WATER (FT)	DEPTH TO WATER (FT)	DRAWDOWN (ΔH FT)	PUMPING RATE (gal/min)	SPECIFIC CAPACITY (gpm/ft)
257.6-272.4	14:19	0	208.09	16.13	4.48	1.700	0.379
L= 14.8 ft	14:20	1	208.055	16.17	4.515	1.700	0.377
	14:21	2	208.019	16.20	4.551	1.700	0.374
	14:22	3	208.019	16.20	4.551	1.700	0.374
	14:23	4	208.019	16.20	4.551	1.700	0.374
	14:24	5	207.983	16.24	4.587	1.700	0.371
	14:25	6	207.983	16.24	4.587	1.700	0.371
	14:26	7	207.983	16.24	4.587	1.700	0.371
	14:27	8	207.947	16.27	4.623	1.700	0.368
	14:28	9	207.911	16.31	4.659	1.700	0.365
	14:29	10	207.911	16.31	4.659	1.700	0.365
	14:30	11	207.875	16.35	4.695	1.700	0.362
	14:31	12	207.911	16.31	4.659	1.700	0.365
	14:32	13	207.875	16.35	4.695	1.700	0.362
	14:33	14	207.839	16.38	4.731	1.700	0.359
	14:34	15	207.839	16.38	4.731	1.700	0.359
	14:35	16	207.804	16.42	4.766	1.700	0.357
	14:36	17	207.804	16.42	4.766	1.700	0.357
	14:37	18	207.768	16.45	4.802	1.700	0.354
	14:38	19	207.768	16.45	4.802	1.700	0.354
	14:39	20	207.804	16.42	4.766	1.700	0.357
	14:40	21	207.732	16.49	4.838	1.700	0.351

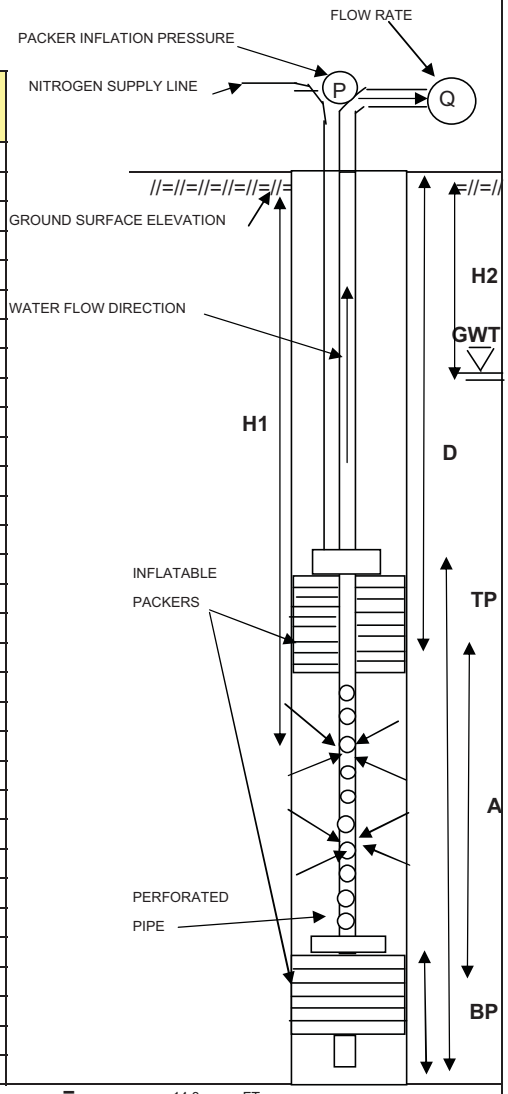

LEGEND:			
A - TOTAL LENGTH OF TEST SECTION (FT)	=	14.8	FT
TP - TOTAL LENGTH OF TOP PACKER AND ASSEMBLY	=	19.9	FT
BP - TOTAL LENGTH OF BOTTOM PACKER AND ASSEMBLY	=	3.85	FT
D - DISTANCE BETWEEN GROUND SURFACE AND TOP OF THE TEST ZONE	=	257.6	FT
PIP - PACKER INFLATION PRESSURE (D PSI + **50 PSI**)	=	225	PSI
H1- DISTANCE BETWEEN WATER PRESSURE GAUGE AND GROUND SURFACE	=	224.2	FT
H2- DISTANCE BETWEEN GROUND SURFACE AND GROUND WATER TABLE	=	11.65	FT

GZA

BORING NO. /TEST NO. MW-67 T8 CH

PACKER TEST LOG

GZA GEOENVIRONMENTAL OF NEW YORK 440 NINTH AVENUE, 18th FLOOR NEW YORK, NEW YORK 10001 SCIENTISTS AND ENGINEERS	Client Entergy Indian Point Energy Cente Buchanan, NY	BORING NO./TEST NO. MW-67 T9 CH SHEET 1 of 1 FILE NO. 41.0017869.01 PROJECT LOCATION Indian Point

CONTRACTOR	Aquifer Drilling & Testing, Inc.	BORING COORDINATES	N 463127.0611	E 604426.6654	
FOREMAN	Dave Carter	GROUND SURFACE EL.(FT)	14.356	DATUM	NGVD 29
GZA ENG.	Rick Ponti	FINAL BORING DEPTH (FT)	347.9	DATE START/END	8/16/07
DIAMETER OF DRILLED BOREHOLE	3.83 INCH	GROUND WATER DEPTH (STATIC WATER LEVEL DEPTH)	13.62 (below grade)	Casing is 0.15 ft above ground.	
I.D. OF DRILLING RODS	2 INCH				

TESTED INTERVAL FROM / TO (FT)	TIME (HR:MIN:SEC)	ELAPSED TIME (Δt MIN)	DEPTH UNDER WATER (FT)	DEPTH TO WATER (FT)	DRAWDOWN (ΔH FT)	PUMPING RATE (gal/min)	SPECIFIC CAPACITY (gpm/ft)
249.6-264.2	9:13	0	196.151	20.55	6.929	1.700	0.245
L= 14.8 ft	9:14	1	196.008	20.69	7.072	1.700	0.240
	9:15	2	196.223	20.48	6.857	1.700	0.248
	9:16	3	196.366	20.33	6.714	1.700	0.253
	9:17	4	196.151	20.55	6.929	1.700	0.245
	9:18	5	196.079	20.62	7.001	1.700	0.243
	9:19	6	196.259	20.44	6.821	1.700	0.249
	9:20	7	196.223	20.48	6.857	1.700	0.248
	9:21	8	196.223	20.48	6.857	1.700	0.248
	9:22	9	196.223	20.48	6.857	1.700	0.248

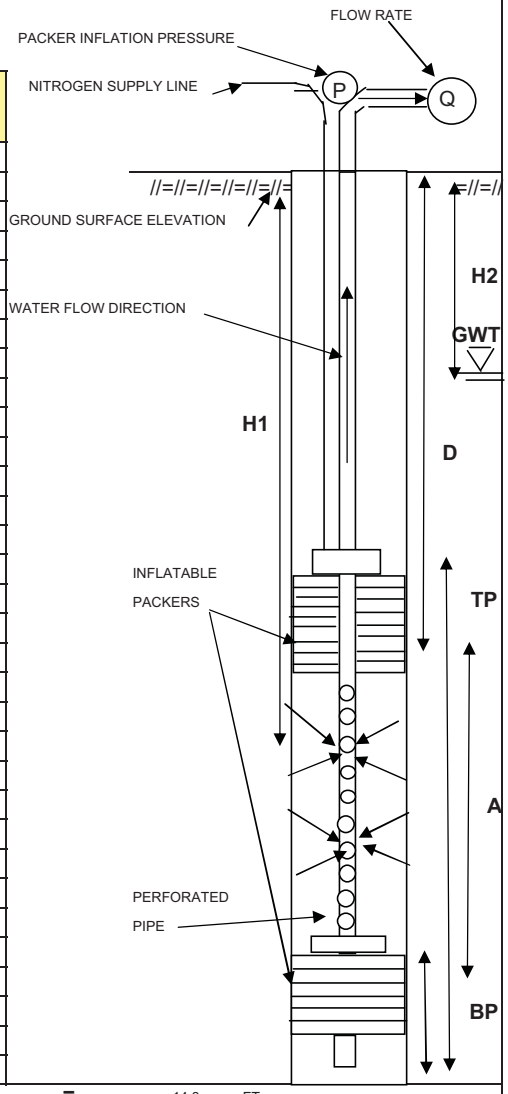

LEGEND:				
A - TOTAL LENGTH OF TEST SECTION (FT)	=	14.8	FT
TP - TOTAL LENGTH OF TOP PACKER AND ASSEMBLY	=	19.9	FT
BP - TOTAL LENGTH OF BOTTOM PACKER AND ASSEMBLY	=	3.85	FT
D - DISTANCE BETWEEN GROUND SURFACE AND TOP OF THE TEST ZONE	=	249.6	FT
PIP - PACKER INFLATION PRESSURE (D PSI + **50 PSI**)	=	225	PSI
H1- DISTANCE BETWEEN WATER PRESSURE GAUGE AND GROUND SURFACE	=	216.7	FT
H2- DISTANCE BETWEEN GROUND SURFACE AND GROUND WATER TABLE	=	13.62	FT

GZA

BORING NO. /TEST NO. MW-67 T9 CH

PACKER TEST LOG

GZA GEOENVIRONMENTAL OF NEW YORK 440 NINTH AVENUE, 18th FLOOR NEW YORK, NEW YORK 10001 SCIENTISTS AND ENGINEERS	Client Entergy Indian Point Energy Cente Buchanan, NY	BORING NO./TEST NO.	MW-67 T10
		SHEET	1 of 1
		FILE NO.	41.0017869.01
		PROJECT LOCATION	Indian Point

CONTRACTOR	Aquifer Drilling & Testing, Inc.	BORING COORDINATES	N 463127.0611	E 604426.6654	
FOREMAN	Dave Carter	GROUND SURFACE EL.(FT)	14.356	DATUM	NGVD 29
GZA ENG.	Rick Ponti	FINAL BORING DEPTH (FT)	347.9	DATE START/END	8/16/07
DIAMETER OF DRILLED BOREHOLE	3.83 INCH	GROUND WATER DEPTH (STATIC WATER LEVEL DEPTH)	12.41	(below grade)	Casing is 0.15 ft above ground.
I.D. OF DRILLING RODS	2 INCH				

TESTED INTERVAL FROM / TO (FT)	TIME (HR:MIN)	ELAPSED TIME (Δt MIN)	DEPTH UNDER WATER (FT)	DEPTH TO WATER (FT)	CUMULATIVE RECOVERY (ΔH FT)	RECOVERY RATE (ΔH/Δt)
233.6-248.4	14:26:30	0.0	156.307	44.38	0.00	-
L= 14.8 ft	14:27:00	0.5	160.39	40.30	4.08	8.16600
	14:27:30	1.0	163.613	37.08	7.31	7.30600
	14:28:00	1.5	166.193	34.50	9.89	6.59067
	14:28:30	2.0	168.521	32.17	12.21	6.10700
	14:29:30	3.0	172.534	28.16	16.23	5.40900
	14:30:30	4.0	175.758	24.93	19.45	4.86275
	14:31:30	5.0	178.41	22.28	22.10	4.42060
	14:32:30	6.0	180.452	20.24	24.15	4.02417
	14:33:30	7.0	182.137	18.55	25.83	3.69000
	14:34:30	8.0	183.498	17.19	27.19	3.39888
	14:35:30	9.0	184.538	16.15	28.23	3.13678
	14:36:30	10.0	185.398	15.29	29.09	2.90910
	14:37:30	11.0	186.079	14.61	29.77	2.70655
	14:38:30	12.0	186.581	14.11	30.27	2.52283
	14:39:30	13.0	187.047	13.64	30.74	2.36462
	14:40:30	14.0	187.369	13.32	31.06	2.21871
	14:41:30	15.0	187.62	13.07	31.31	2.08753
	14:42:30	16.0	187.835	12.86	31.53	1.97050

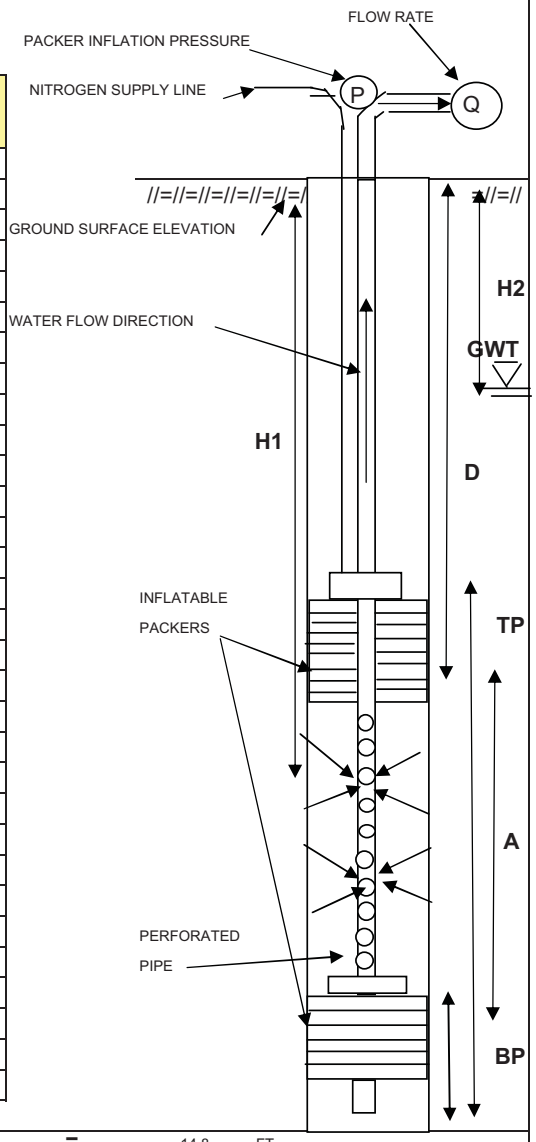

LEGEND:				
	A - TOTAL LENGTH OF TEST SECTION (FT)	=	14.8	FT
	TP - TOTAL LENGTH OF TOP PACKER AND ASSEMBLY	=	19.9	FT
	BP - TOTAL LENGTH OF BOTTOM PACKER AND ASSEMBLY	=	3.85	FT
	D - DISTANCE BETWEEN GROUND SURFACE AND TOP OF THE TEST ZONE	=	233.6	FT
	PIP - PACKER INFLATION PRESSURE (D PSI **+ 50 PSI**)	=	225	PSI
	H1- DISTANCE BETWEEN WATER PRESSURE GAUGE AND GROUND SURFACE	=	200.7	FT
	H2- DISTANCE BETWEEN GROUND SURFACE AND GROUND WATER TABLE	=	12.41	FT

GZA

BORING NO. /TEST NO. MW-67 T10

PACKER TEST LOG

GZA GEOENVIRONMENTAL OF NEW YORK 440 NINTH AVENUE, 18th FLOOR NEW YORK, NEW YORK 10001 SCIENTISTS AND ENGINEERS	Client Entergy Indian Point Energy Cente Buchanan, NY	BORING NO./TEST NO.	MW-67 T11
		SHEET	1 of 1
		FILE NO.	41.0017869.01
		PROJECT LOCATION	Indian Point

CONTRACTOR	Aquifer Drilling & Testing, Inc.	BORING COORDINATES	N 463127.0611	E 604426.6654	
FOREMAN	Dave Carter	GROUND SURFACE EL.(FT)	14.356	DATUM	NGVD 29
GZA ENG.	Rick Ponti	FINAL BORING DEPTH (FT)	347.9	DATE START/END	8/17/07
DIAMETER OF DRILLED BOREHOLE	3.83 INCH	GROUND WATER DEPTH (STATIC WATER LEVEL DEPTH)	13.30	(below grade)	Casing is 0.15 ft above ground.
I.D. OF DRILLING RODS	2 INCH				

TESTED INTERVAL FROM / TO (FT)	TIME (HR:MIN)	ELAPSED TIME (Δt MIN)	DEPTH UNDER WATER (FT)	DEPTH TO WATER (FT)	CUMULATIVE RECOVERY (ΔH FT)	RECOVERY RATE (ΔH/Δt)
216.6-231.4	13:33:00	0.0	151.58	31.56	0.00	-
L= 14.8 ft	13:33:30	0.5	156.092	27.05	4.51	9.02400
	13:34:00	1.0	159.172	23.97	7.59	7.59200
	13:34:30	1.5	161.536	21.60	9.96	6.63733
	13:35:00	2.0	163.47	19.67	11.89	5.94500
	13:36:00	3.0	166.264	16.88	14.68	4.89467
	13:37:00	4.0	168.091	15.05	16.51	4.12775
	13:38:00	5.0	169.273	13.87	17.69	3.53860
	13:39:00	6.0	169.954	13.19	18.37	3.06233

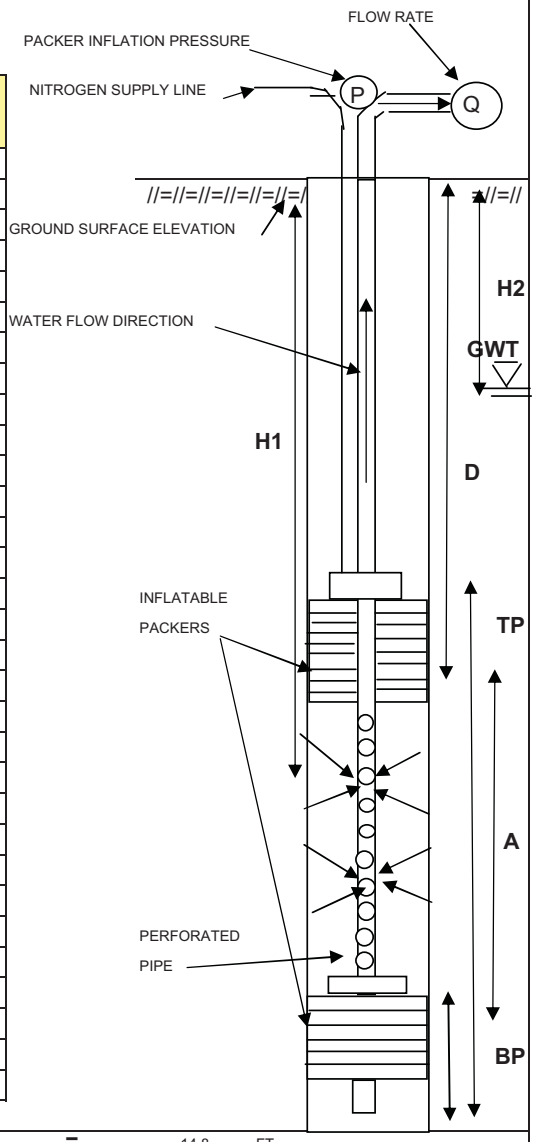

LEGEND:				
	A - TOTAL LENGTH OF TEST SECTION (FT)	=	14.8	FT
	TP - TOTAL LENGTH OF TOP PACKER AND ASSEMBLY	=	19.9	FT
	BP - TOTAL LENGTH OF BOTTOM PACKER AND ASSEMBLY	=	3.85	FT
	D - DISTANCE BETWEEN GROUND SURFACE AND TOP OF THE TEST ZONE	=	216.6	FT
	PIP - PACKER INFLATION PRESSURE (D PSI **+ 50 PSI**)	=	225	PSI
	H1- DISTANCE BETWEEN WATER PRESSURE GAUGE AND GROUND SURFACE	=	183.1	FT
	H2- DISTANCE BETWEEN GROUND SURFACE AND GROUND WATER TABLE	=	13.30	FT

GZA

BORING NO. /TEST NO. MW-67 T11

PACKER TEST LOG

GZA GEOENVIRONMENTAL OF NEW YORK 440 NINTH AVENUE, 18th FLOOR NEW YORK, NEW YORK 10001 SCIENTISTS AND ENGINEERS	Client Entergy Indian Point Energy Cente Buchanan, NY	BORING NO./TEST NO.	MW-67 T12
		SHEET	1 of 1
		FILE NO.	41.0017869.01
		PROJECT LOCATION	Indian Point

CONTRACTOR	Aquifer Drilling & Testing, Inc.	BORING COORDINATES	N 463127.0611	E 604426.6654	
FOREMAN	Dave Carter	GROUND SURFACE EL.(FT)	14.356	DATUM	NGVD 29
GZA ENG.	Rick Ponti	FINAL BORING DEPTH (FT)	347.9	DATE START/END	8/20/07
DIAMETER OF DRILLED BOREHOLE	3.83 INCH	GROUND WATER DEPTH (STATIC WATER LEVEL DEPTH)	12.99	(below grade)	Casing is 0.15 ft above ground.
I.D. OF DRILLING RODS	2 INCH				

TESTED INTERVAL FROM / TO (FT)	TIME (HR:MIN)	ELAPSED TIME (Δt MIN)	DEPTH UNDER WATER (FT)	DEPTH TO WATER (FT)	CUMULATIVE RECOVERY (ΔH FT)	RECOVERY RATE (ΔH/Δt)
200.6-215.4	15:34:00	0.0	137.437	28.89	0.00	-
L= 14.8 ft	15:34:30	0.5	140.158	26.17	2.72	5.44200
	15:35:00	1.0	141.303	25.03	3.87	3.86600
	15:35:30	1.5	142.306	24.02	4.87	3.24600
	15:36:00	2.0	143.201	23.13	5.76	2.88200
	15:37:00	3.0	144.848	21.48	7.41	2.47033
	15:38:00	4.0	146.28	20.05	8.84	2.21075
	15:39:00	5.0	147.533	18.80	10.10	2.01920
	15:40:00	6.0	148.643	17.69	11.21	1.86767
	15:41:00	7.0	149.538	16.79	12.10	1.72871
	15:42:00	8.0	150.326	16.00	12.89	1.61113
	15:43:00	9.0	151.042	15.29	13.61	1.51167
	15:44:00	10.0	151.651	14.68	14.21	1.42140
	15:45:00	11.0	153.012	13.32	15.58	1.41591

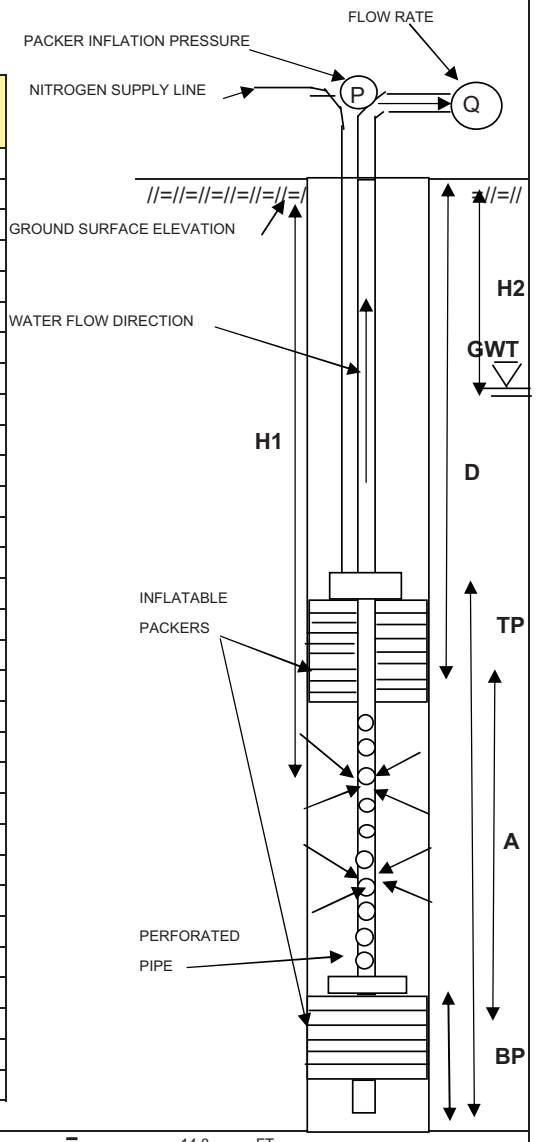

LEGEND:				
	A - TOTAL LENGTH OF TEST SECTION (FT)	=	14.8	FT
	TP - TOTAL LENGTH OF TOP PACKER AND ASSEMBLY	=	19.9	FT
	BP - TOTAL LENGTH OF BOTTOM PACKER AND ASSEMBLY	=	3.85	FT
	D - DISTANCE BETWEEN GROUND SURFACE AND TOP OF THE TEST ZONE	=	200.6	FT
	PIP - PACKER INFLATION PRESSURE (D PSI **+ 50 PSI**)	=	200	PSI
	H1- DISTANCE BETWEEN WATER PRESSURE GAUGE AND GROUND SURFACE	=	166.3	FT
	H2- DISTANCE BETWEEN GROUND SURFACE AND GROUND WATER TABLE	=	12.99	FT

GZA

BORING NO. /TEST NO. MW-67 T12

PACKER TEST LOG

GZA GEOENVIRONMENTAL OF NEW YORK 440 NINTH AVENUE, 18th FLOOR NEW YORK, NEW YORK 10001 SCIENTISTS AND ENGINEERS	Client Entergy Indian Point Energy Cente Buchanan, NY	BORING NO./TEST NO. SHEET FILE NO. PROJECT LOCATION	MW-67 T13 1 of 1 41.0017869.01 Indian Point

CONTRACTOR	Aquifer Drilling & Testing, Inc.	BORING COORDINATES	N 463127.0611	E 604426.6654	
FOREMAN	Dave Carter	GROUND SURFACE EL.(FT)	14.356	DATUM	NGVD 29
GZA ENG.	Rick Ponti	FINAL BORING DEPTH (FT)	347.9	DATE START/END	8/20/07
DIAMETER OF DRILLED BOREHOLE	3.83 INCH	GROUND WATER DEPTH (STATIC WATER LEVEL DEPTH)	13.59	(below grade)	Casing is 0.15 ft above ground.
I.D. OF DRILLING RODS	2 INCH				

TESTED INTERVAL FROM / TO (FT)	TIME (HR:MIN)	ELAPSED TIME (Δt MIN)	DEPTH UNDER WATER (FT)	DEPTH TO WATER (FT)	CUMULATIVE RECOVERY (ΔH FT)	RECOVERY RATE (ΔH/Δt)
170.1-184.9	13:00:00	0.0	89.139	47.06	0.00	-
L= 14.8 ft	13:00:30	0.5	92.679	43.52	3.54	7.08000
	13:01:00	1.0	94.038	42.16	4.90	4.89900
	13:01:30	1.5	95.254	40.95	6.12	4.07667
	13:02:00	2.0	96.398	39.80	7.26	3.62950
	13:03:00	3.0	98.615	37.59	9.48	3.15867
	13:04:00	4.0	100.618	35.58	11.48	2.86975
	13:05:00	5.0	102.442	33.76	13.30	2.66060
	13:06:00	6.0	104.123	32.08	14.98	2.49733
	13:07:00	7.0	105.733	30.47	16.59	2.37057
	13:08:00	8.0	107.128	29.07	17.99	2.24863
	13:09:00	9.0	108.451	27.75	19.31	2.14578
	13:10:00	10.0	109.668	26.53	20.53	2.05290
	13:11:00	11.0	110.848	25.35	21.71	1.97355
	13:12:00	12.0	111.921	24.28	22.78	1.89850
	13:13:00	13.0	112.923	23.28	23.78	1.82954
	13:14:00	14.0	113.889	22.31	24.75	1.76786
	13:15:00	15.0	114.676	21.52	25.54	1.70247
	13:16:00	16.0	115.463	20.74	26.32	1.64525
	13:17:00	17.0	116.179	20.02	27.04	1.59059
	13:18:00	18.0	116.823	19.38	27.68	1.53800
	13:19:00	19.0	117.467	18.73	28.33	1.49095
	13:20:00	20.0	118.039	18.16	28.90	1.44500
	13:21:00	21.0	118.576	17.62	29.44	1.40176
	13:22:00	22.0	119.077	17.12	29.94	1.36082

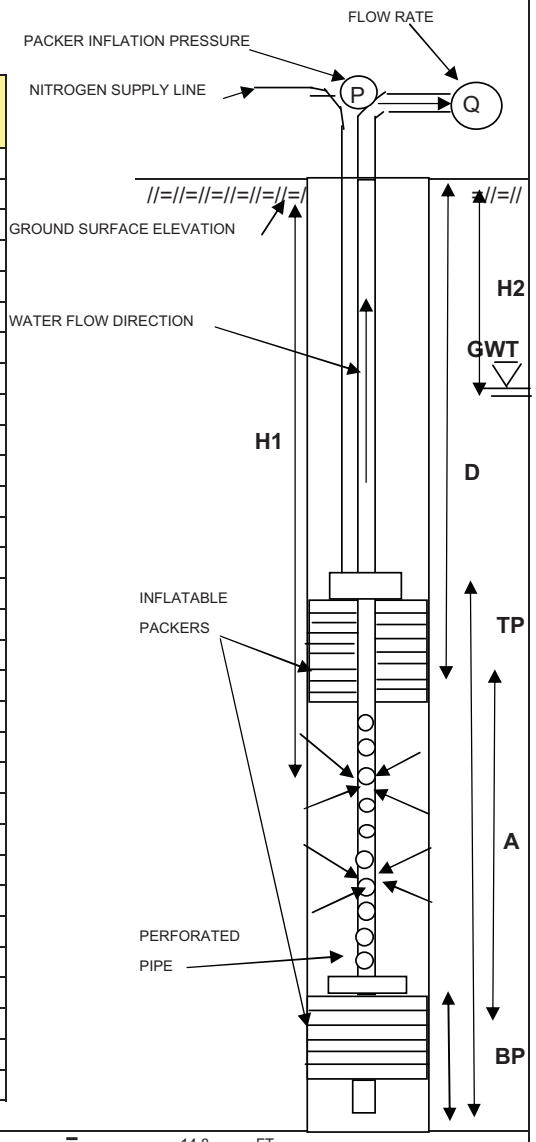

LEGEND:				
	A - TOTAL LENGTH OF TEST SECTION (FT)	=	14.8	FT
	TP - TOTAL LENGTH OF TOP PACKER AND ASSEMBLY	=	19.9	FT
	BP - TOTAL LENGTH OF BOTTOM PACKER AND ASSEMBLY	=	3.85	FT
	D - DISTANCE BETWEEN GROUND SURFACE AND TOP OF THE TEST ZONE	=	170.1	FT
	PIP - PACKER INFLATION PRESSURE (D PSI **+ 50 PSI**)	=	225	PSI
	H1- DISTANCE BETWEEN WATER PRESSURE GAUGE AND GROUND SURFACE	=	136.2	FT
	H2- DISTANCE BETWEEN GROUND SURFACE AND GROUND WATER TABLE	=	13.59	FT

GZA

BORING NO. /TEST NO. MW-67 T13

PACKER TEST LOG

GZA GEOENVIRONMENTAL OF NEW YORK 440 NINTH AVENUE, 18th FLOOR NEW YORK, NEW YORK 10001 SCIENTISTS AND ENGINEERS	Client Entergy Indian Point Energy Cente Buchanan, NY	BORING NO./TEST NO. MW-67 T13 CH SHEET 1 of 1 FILE NO. 41.0017869.01 PROJECT LOCATION Indian Point

CONTRACTOR	Aquifer Drilling & Testing, Inc.	BORING COORDINATES	N 463127.0611 E 604426.6654
FOREMAN	Dave Carter	GROUND SURFACE EL.(FT)	14.356 DATUM NGVD 29
GZA ENG.	Rick Ponti	FINAL BORING DEPTH (FT)	347.9 DATE START/END 8/20/07
DIAMETER OF DRILLED BOREHOLE	3.83 INCH	GROUND WATER DEPTH (STATIC WATER LEVEL DEPTH)	13.59 (below grade) Casing is 0.15 ft above ground.
I.D. OF DRILLING RODS	2 INCH		

TESTED INTERVAL FROM / TO (FT)	TIME (HR:MIN:SEC)	ELAPSED TIME (Δt MIN)	DEPTH UNDER WATER (FT)	DEPTH TO WATER (FT)	DRAWDOWN (ΔH FT)	PUMPING RATE (gal/min)	SPECIFIC CAPACITY (gpm/ft)
170.1-184.9	13:56	0	74.482	61.72	48.128	0.600	0.012
L= 14.8 ft	13:57	1	74.518	61.68	48.092	0.600	0.012
	13:58	2	74.482	61.72	48.128	0.600	0.012
	13:59	3	74.482	61.72	48.128	0.600	0.012
	14:00	4	74.482	61.72	48.128	0.600	0.012
	14:01	5	74.482	61.72	48.128	0.600	0.012
	14:02	6	74.41	61.79	48.2	0.600	0.012
	14:03	7	74.375	61.83	48.235	0.600	0.012
	14:04	8	74.41	61.79	48.2	0.600	0.012
	14:05	9	74.41	61.79	48.2	0.600	0.012
	14:06	10	74.303	61.90	48.307	0.600	0.012
	14:07	11	74.339	61.86	48.271	0.600	0.012
	14:08	12	74.375	61.83	48.235	0.600	0.012
	14:09	13	74.339	61.86	48.271	0.600	0.012
	14:10	14	74.267	61.93	48.343	0.600	0.012
	14:11	15	74.339	61.86	48.271	0.600	0.012
	14:12	16	74.482	61.72	48.128	0.600	0.012
	14:13	17	74.518	61.68	48.092	0.600	0.012
	14:14	18	74.482	61.72	48.128	0.600	0.012
	14:15	19	74.482	61.72	48.128	0.600	0.012

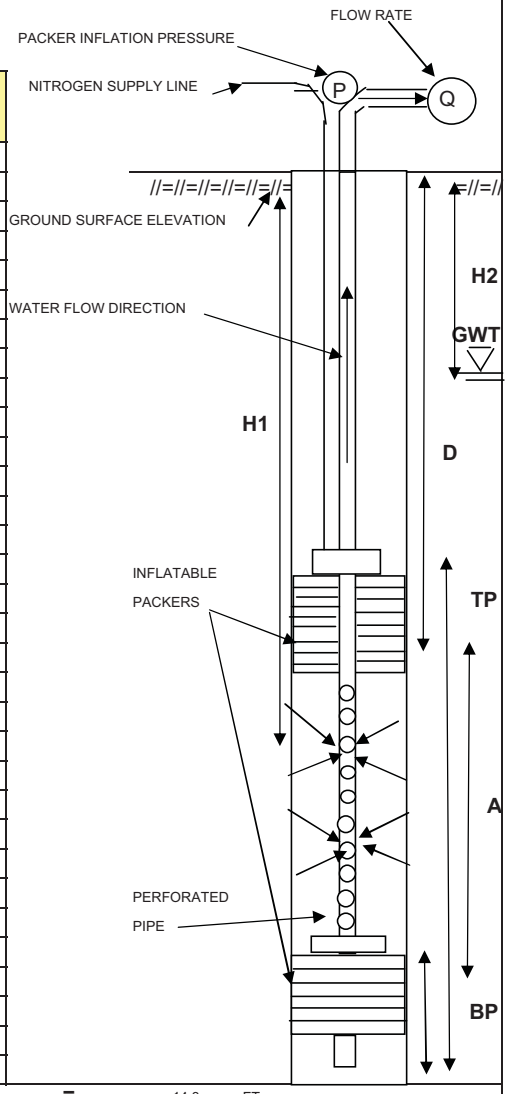

LEGEND:			
A - TOTAL LENGTH OF TEST SECTION (FT)	=	14.8	FT
TP - TOTAL LENGTH OF TOP PACKER AND ASSEMBLY	=	19.9	FT
BP - TOTAL LENGTH OF BOTTOM PACKER AND ASSEMBLY	=	3.85	FT
D - DISTANCE BETWEEN GROUND SURFACE AND TOP OF THE TEST ZONE	=	170.1	FT
PIP - PACKER INFLATION PRESSURE (D PSI + **50 PSI**)	=	225	PSI
H1- DISTANCE BETWEEN WATER PRESSURE GAUGE AND GROUND SURFACE	=	136.2	FT
H2- DISTANCE BETWEEN GROUND SURFACE AND GROUND WATER TABLE	=	13.59	FT

GZA

BORING NO. /TEST NO. MW-67 T13 CH

PACKER TEST LOG

GZA GEOENVIRONMENTAL OF NEW YORK 440 NINTH AVENUE, 18th FLOOR NEW YORK, NEW YORK 10001 SCIENTISTS AND ENGINEERS	Client Entergy Indian Point Energy Cente Buchanan, NY	BORING NO./TEST NO. SHEET FILE NO. PROJECT LOCATION	MW-67 T14A 1 of 1 41.0017869.01 Indian Point

CONTRACTOR	Aquifer Drilling & Testing, Inc.	BORING COORDINATES	N 463127.0611	E 604426.6654	
FOREMAN	Dave Carter	GROUND SURFACE EL.(FT)	14.356	DATUM	NGVD 29
GZA ENG.	Rick Ponti	FINAL BORING DEPTH (FT)	347.9	DATE START/END	8/20/07
DIAMETER OF DRILLED BOREHOLE	3.83 INCH	GROUND WATER DEPTH (STATIC WATER LEVEL DEPTH)	12.13	(below grade)	Casing is 0.15 ft above ground.
I.D. OF DRILLING RODS	2 INCH				

TESTED INTERVAL FROM / TO (FT)	TIME (HR:MIN)	ELAPSED TIME (Δt MIN)	DEPTH UNDER WATER (FT)	DEPTH TO WATER (FT)	CUMULATIVE RECOVERY (ΔH FT)	RECOVERY RATE (ΔH/Δt)
152.5-167.3	17:10:30	0.0	85.206	33.15	0.00	-
L= 14.8 ft	17:11:00	0.5	87.423	30.94	2.22	4.43400
	17:11:30	1.0	88.102	30.26	2.90	2.89600
	17:12:00	1.5	88.71	29.65	3.50	2.33600
	17:12:30	2.0	89.282	29.08	4.08	2.03800
	17:13:30	3.0	90.355	28.01	5.15	1.71633
	17:14:30	4.0	91.392	26.97	6.19	1.54650
	17:15:30	5.0	92.321	26.04	7.11	1.42300
	17:16:30	6.0	93.287	25.07	8.08	1.34683
	17:17:30	7.0	94.145	24.22	8.94	1.27700
	17:18:30	8.0	94.967	23.39	9.76	1.22013
	17:19:30	9.0	95.718	22.64	10.51	1.16800
	17:20:30	10.0	96.434	21.93	11.23	1.12280
	17:21:30	11.0	97.149	21.21	11.94	1.08573
	17:22:30	12.0	97.757	20.60	12.55	1.04592
	17:23:30	13.0	98.401	19.96	13.20	1.01500
	17:24:30	14.0	98.973	19.39	13.77	0.98336
	17:25:30	15.0	99.474	18.89	14.27	0.95120
	17:26:30	16.0	100.01	18.35	14.80	0.92525
	17:27:30	17.0	100.475	17.89	15.27	0.89818
	17:28:30	18.0	100.94	17.42	15.73	0.87411
	17:29:30	19.0	101.333	17.03	16.13	0.84879
	17:30:30	20.0	101.727	16.63	16.52	0.82605
	17:31:30	21.0	102.12	16.24	16.91	0.80543
	17:32:30	22.0	102.442	15.92	17.24	0.78345
	17:33:30	23.0	102.764	15.60	17.56	0.76339
	17:34:30	24.0	103.086	15.27	17.88	0.74500
	17:35:30	25.0	103.372	14.99	18.17	0.72664
	17:36:30	26.0	103.622	14.74	18.42	0.70831
	17:37:30	27.0	103.909	14.45	18.70	0.69270
	17:38:30	28.0	104.123	14.24	18.92	0.67561

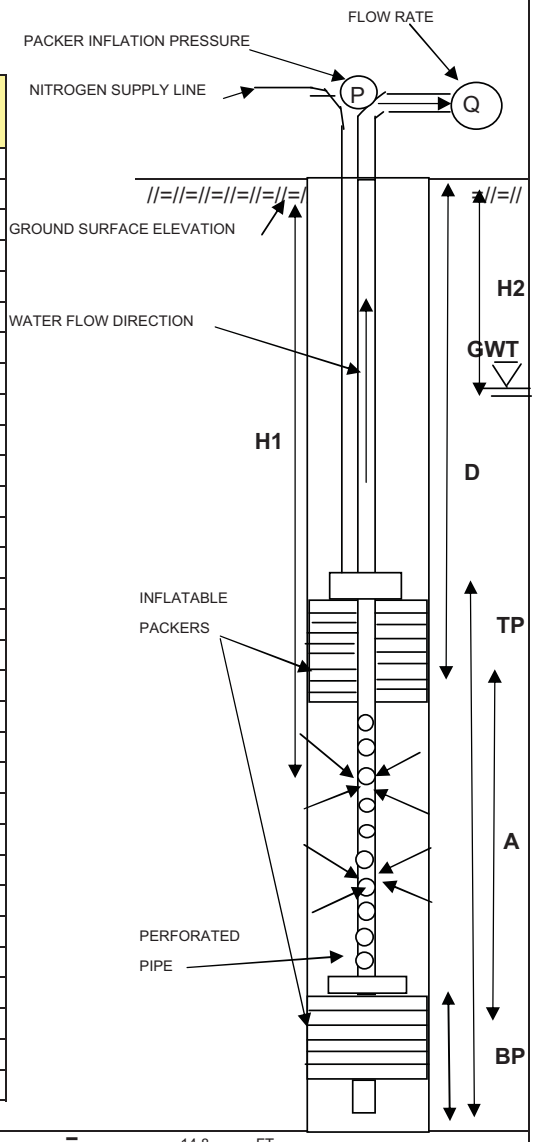

LEGEND:				
	A - TOTAL LENGTH OF TEST SECTION (FT)	=	14.8	FT
	TP - TOTAL LENGTH OF TOP PACKER AND ASSEMBLY	=	19.9	FT
	BP - TOTAL LENGTH OF BOTTOM PACKER AND ASSEMBLY	=	3.85	FT
	D - DISTANCE BETWEEN GROUND SURFACE AND TOP OF THE TEST ZONE	=	152.5	FT
	PIP - PACKER INFLATION PRESSURE (D PSI **+ 50 PSI**)	=	200	PSI
	H1- DISTANCE BETWEEN WATER PRESSURE GAUGE AND GROUND SURFACE	=	118.4	FT
	H2- DISTANCE BETWEEN GROUND SURFACE AND GROUND WATER TABLE	=	12.13	FT

GZA

BORING NO. /TEST NO. MW-67 T14A

PACKER TEST LOG

GZA GEOENVIRONMENTAL OF NEW YORK 440 NINTH AVENUE, 18th FLOOR NEW YORK, NEW YORK 10001 SCIENTISTS AND ENGINEERS	Client Entergy Indian Point Energy Cente Buchanan, NY	BORING NO./TEST NO.	MW-67 T15A
		SHEET	1 of 1
		FILE NO.	41.0017869.01
		PROJECT LOCATION	Indian Point

CONTRACTOR	Aquifer Drilling & Testing, Inc.	BORING COORDINATES	N 463127.0611	E 604426.6654	
FOREMAN	Dave Carter	GROUND SURFACE EL.(FT)	14.356	DATUM	NGVD 29
GZA ENG.	Rick Ponti	FINAL BORING DEPTH (FT)	347.9	DATE START/END	8/21/07
DIAMETER OF DRILLED BOREHOLE	3.83 INCH	GROUND WATER DEPTH (STATIC WATER LEVEL DEPTH)	12.73	(below grade)	Casing is 0.15 ft above ground.
I.D. OF DRILLING RODS	2 INCH				

TESTED INTERVAL FROM / TO (FT)	TIME (HR:MIN)	ELAPSED TIME (Δt MIN)	DEPTH UNDER WATER (FT)	DEPTH TO WATER (FT)	CUMULATIVE RECOVERY (ΔH FT)	RECOVERY RATE (ΔH/Δt)
133-147.8	8:11:00	0.0	32.97	66.31	0.00	-
L= 14.8 ft	8:12:00	1.0	39.112	60.17	6.14	6.14200
	8:13:00	2.0	42.683	56.60	9.71	4.85650
	8:14:00	3.0	46.041	53.24	13.07	4.35700
	8:15:00	4.0	49.148	50.13	16.18	4.04450
	8:16:00	5.0	52.042	47.24	19.07	3.81440
	8:17:00	6.0	54.792	44.49	21.82	3.63700
	8:18:00	7.0	57.293	41.99	24.32	3.47471
	8:19:00	8.0	59.687	39.59	26.72	3.33963
	8:20:00	9.0	61.938	37.34	28.97	3.21867
	8:21:00	10.0	64.046	35.23	31.08	3.10760
	8:22:00	11.0	65.976	33.30	33.01	3.00055
	8:23:00	12.0	67.799	31.48	34.83	2.90242
	8:24:00	13.0	69.478	29.80	36.51	2.80831
	8:25:00	14.0	71.051	28.23	38.08	2.72007
	8:26:00	15.0	72.48	26.80	39.51	2.63400
	8:27:00	16.0	73.838	25.44	40.87	2.55425
	8:28:00	17.0	75.054	24.23	42.08	2.47553
	8:29:00	18.0	76.198	23.08	43.23	2.40156
	8:30:00	19.0	77.234	22.05	44.26	2.32968
	8:31:00	20.0	78.199	21.08	45.23	2.26145

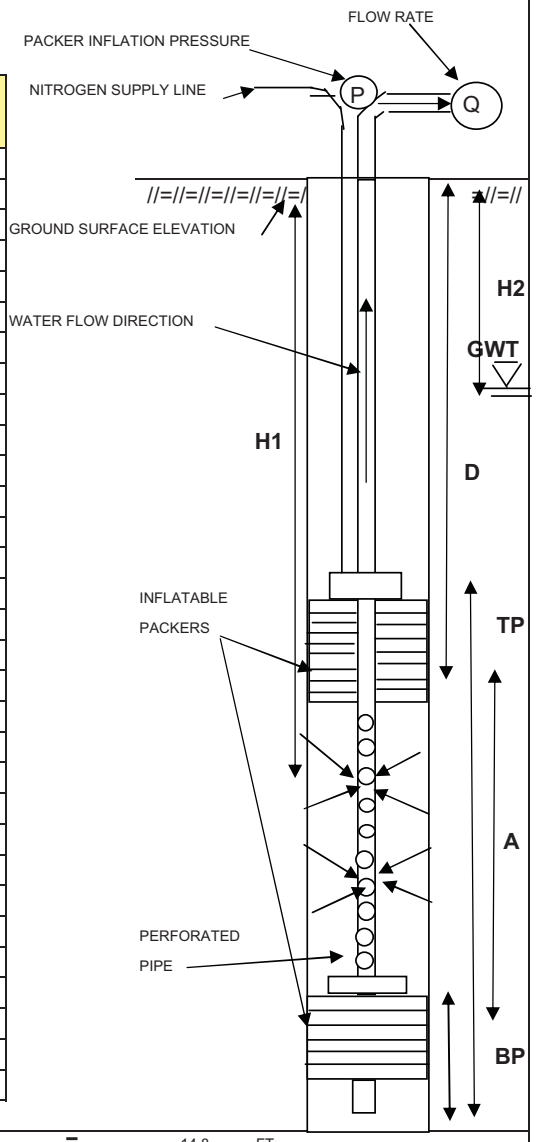

LEGEND:				
	A - TOTAL LENGTH OF TEST SECTION (FT)	=	14.8	FT
	TP - TOTAL LENGTH OF TOP PACKER AND ASSEMBLY	=	19.9	FT
	BP - TOTAL LENGTH OF BOTTOM PACKER AND ASSEMBLY	=	3.85	FT
	D - DISTANCE BETWEEN GROUND SURFACE AND TOP OF THE TEST ZONE	=	133	FT
	PIP - PACKER INFLATION PRESSURE (D PSI **+ 50 PSI**)	=	200	PSI
	H1- DISTANCE BETWEEN WATER PRESSURE GAUGE AND GROUND SURFACE	=	99.3	FT
	H2- DISTANCE BETWEEN GROUND SURFACE AND GROUND WATER TABLE	=	12.73	FT

GZA

BORING NO. /TEST NO. MW-67 T15A

PACKER TEST LOG

GZA GEOENVIRONMENTAL OF NEW YORK 440 NINTH AVENUE, 18th FLOOR NEW YORK, NEW YORK 10001 SCIENTISTS AND ENGINEERS	Client Entergy Indian Point Energy Cente Buchanan, NY	BORING NO./TEST NO. MW-67 T15A CH SHEET 1 of 1 FILE NO. 41.0017869.01 PROJECT LOCATION Indian Point

CONTRACTOR	Aquifer Drilling & Testing, Inc.	BORING COORDINATES	N 463127.0611 E 604426.6654
FOREMAN	Dave Carter	GROUND SURFACE EL.(FT)	14.356 DATUM NGVD 29
GZA ENG.	Rick Ponti	FINAL BORING DEPTH (FT)	347.9 DATE START/END 8/21/07
DIAMETER OF DRILLED BOREHOLE	3.83 INCH	GROUND WATER DEPTH (STATIC WATER LEVEL DEPTH)	12.73 (below grade) Casing is 0.15 ft above ground.
I.D. OF DRILLING RODS	2 INCH		

TESTED INTERVAL FROM / TO (FT)	TIME (HR:MIN:SEC)	ELAPSED TIME (Δt MIN)	DEPTH UNDER WATER (FT)	DEPTH TO WATER (FT)	DRAWDOWN (ΔH FT)	PUMPING RATE (gal/min)	SPECIFIC CAPACITY (gpm/ft)
133.0-147.8	8:54	0	63.832	35.45	22.718	0.500	0.022
L= 14.8 ft	8:55	1	63.796	35.48	22.754	0.500	0.022
	8:56	2	63.76	35.52	22.79	0.500	0.022
	8:57	3	63.76	35.52	22.79	0.500	0.022
	8:58	4	63.796	35.48	22.754	0.500	0.022
	8:59	5	63.76	35.52	22.79	0.500	0.022
	9:00	6	63.796	35.48	22.754	0.500	0.022
	9:01	7	63.796	35.48	22.754	0.500	0.022
	9:02	8	63.832	35.45	22.718	0.500	0.022
	9:03	9	63.832	35.45	22.718	0.500	0.022
	9:04	10	63.832	35.45	22.718	0.500	0.022
	9:05	11	63.832	35.45	22.718	0.500	0.022
	9:06	12	63.868	35.41	22.682	0.500	0.022

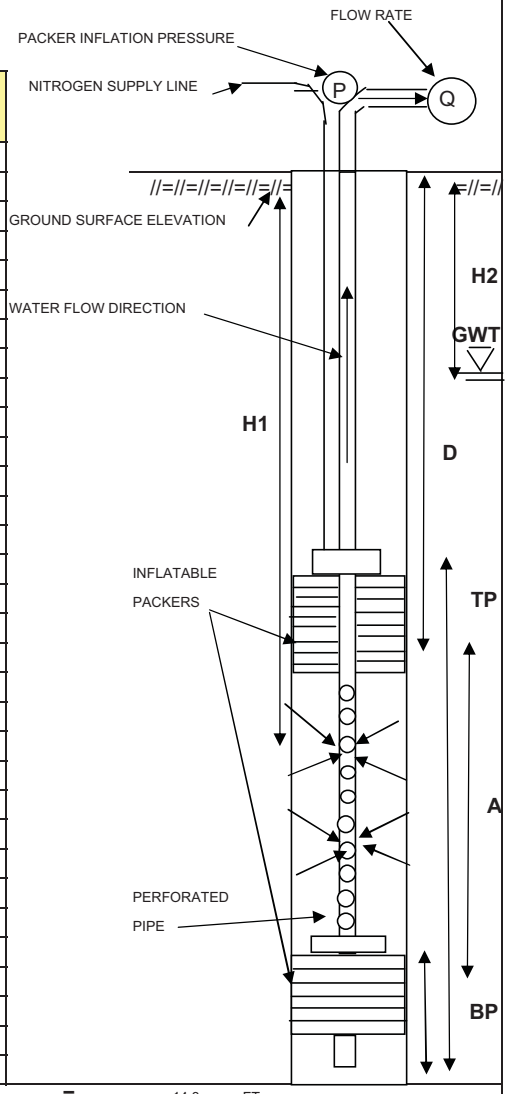

LEGEND:			
A - TOTAL LENGTH OF TEST SECTION (FT)	=	14.8	FT
TP - TOTAL LENGTH OF TOP PACKER AND ASSEMBLY	=	19.9	FT
BP - TOTAL LENGTH OF BOTTOM PACKER AND ASSEMBLY	=	3.85	FT
D - DISTANCE BETWEEN GROUND SURFACE AND TOP OF THE TEST ZONE	=	133.0	FT
PIP - PACKER INFLATION PRESSURE (D PSI + **50 PSI**)	=	200	PSI
H1- DISTANCE BETWEEN WATER PRESSURE GAUGE AND GROUND SURFACE	=	99.3	FT
H2- DISTANCE BETWEEN GROUND SURFACE AND GROUND WATER TABLE	=	12.73	FT

GZA

BORING NO. /TEST NO. MW-67 T15A CH

PACKER TEST LOG

GZA GEOENVIRONMENTAL OF NEW YORK 440 NINTH AVENUE, 18th FLOOR NEW YORK, NEW YORK 10001 SCIENTISTS AND ENGINEERS	Client Entergy Indian Point Energy Cente Buchanan, NY	BORING NO./TEST NO.	MW-67 T16
		SHEET	1 of 1
		FILE NO.	41.0017869.01
		PROJECT LOCATION	Indian Point

CONTRACTOR	Aquifer Drilling & Testing, Inc.	BORING COORDINATES	N 463127.0611	E 604426.6654	
FOREMAN	Dave Carter	GROUND SURFACE EL.(FT)	14.356	DATUM	NGVD 29
GZA ENG.	Rick Ponti	FINAL BORING DEPTH (FT)	347.9	DATE START/END	8/24/07
DIAMETER OF DRILLED BOREHOLE	3.83 INCH	GROUND WATER DEPTH (STATIC WATER LEVEL DEPTH)	13.08 (below grade)	Casing is 0.15 ft above ground.	
I.D. OF DRILLING RODS	2 INCH				

TESTED INTERVAL FROM / TO (FT)	TIME (HR:MIN)	ELAPSED TIME (Δt MIN)	DEPTH UNDER WATER (FT)	DEPTH TO WATER (FT)	CUMULATIVE RECOVERY (ΔH FT)	RECOVERY RATE (ΔH/Δt)
129.6-144.4	11:04:00	0.0	96.053	30.35	0.00	-
L= 14.8 ft	11:04:30	0.5	98.973	27.43	2.92	5.84000
	11:05:00	1.0	99.922	26.48	3.87	3.86900
	11:05:30	1.5	100.828	25.57	4.78	3.18333
	11:06:00	2.0	101.662	24.74	5.61	2.80450
	11:07:00	3.0	103.172	23.23	7.12	2.37300
	11:08:00	4.0	104.51	21.89	8.46	2.11425
	11:09:00	5.0	105.69	20.71	9.64	1.92740
	11:10:00	6.0	106.711	19.69	10.66	1.77633
	11:11:00	7.0	107.632	18.77	11.58	1.65414
	11:12:00	8.0	108.437	17.96	12.38	1.54800
	11:13:00	9.0	109.128	17.27	13.08	1.45278
	11:14:00	10.0	109.746	16.65	13.69	1.36930
	11:15:00	11.0	110.293	16.11	14.24	1.29455
	11:16:00	12.0	110.754	15.65	14.70	1.22508
	11:17:00	13.0	111.171	15.23	15.12	1.16292
	11:18:00	14.0	111.53	14.87	15.48	1.10550
	11:19:00	15.0	111.833	14.57	15.78	1.05200
	11:20:00	16.0	112.106	14.29	16.05	1.00331
	11:21:00	17.0	112.307	14.09	16.25	0.95612

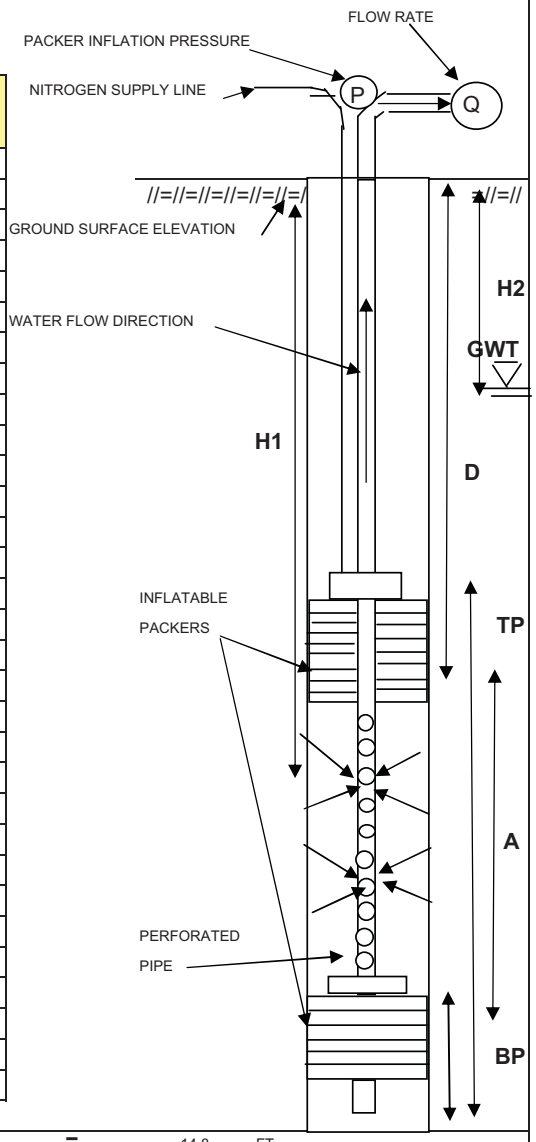

LEGEND:				
	A - TOTAL LENGTH OF TEST SECTION (FT)	=	14.8	FT
	TP - TOTAL LENGTH OF TOP PACKER AND ASSEMBLY	=	19.9	FT
	BP - TOTAL LENGTH OF BOTTOM PACKER AND ASSEMBLY	=	3.85	FT
	D - DISTANCE BETWEEN GROUND SURFACE AND TOP OF THE TEST ZONE	=	129.6	FT
	PIP - PACKER INFLATION PRESSURE (D PSI **+ 50 PSI**)	=	200	PSI
	H1- DISTANCE BETWEEN WATER PRESSURE GAUGE AND GROUND SURFACE	=	126.4	FT
	H2- DISTANCE BETWEEN GROUND SURFACE AND GROUND WATER TABLE	=	13.08	FT

GZA

BORING NO. /TEST NO. MW-67 T16

PACKER TEST LOG

GZA GEOENVIRONMENTAL OF NEW YORK 440 NINTH AVENUE, 18th FLOOR NEW YORK, NEW YORK 10001 SCIENTISTS AND ENGINEERS	Client Entergy Indian Point Energy Cente Buchanan, NY	BORING NO./TEST NO.	MW-67 T17
		SHEET	1 of 1
		FILE NO.	41.0017869.01
		PROJECT LOCATION	Indian Point

CONTRACTOR	Aquifer Drilling & Testing, Inc.	BORING COORDINATES	N 463127.0611	E 604426.6654	
FOREMAN	Dave Carter	GROUND SURFACE EL.(FT)	14.356	DATUM	NGVD 29
GZA ENG.	Rick Ponti	FINAL BORING DEPTH (FT)	347.9	DATE START/END	8/24/07
DIAMETER OF DRILLED BOREHOLE	3.83 INCH	GROUND WATER DEPTH (STATIC WATER LEVEL DEPTH)	13.24	(below grade)	Casing is 0.15 ft above ground.
I.D. OF DRILLING RODS	2 INCH				

TESTED INTERVAL FROM / TO (FT)	TIME (HR:MIN)	ELAPSED TIME (Δt MIN)	DEPTH UNDER WATER (FT)	DEPTH TO WATER (FT)	CUMULATIVE RECOVERY (ΔH FT)	RECOVERY RATE (ΔH/Δt)
118.6-133.4	11:53:00	0.0	85.011	30.77	0.00	-
L= 14.8 ft	11:53:30	0.5	87.096	28.68	2.09	4.17000
	11:54:00	1.0	87.915	27.87	2.90	2.90400
	11:54:30	1.5	88.648	27.13	3.64	2.42467
	11:55:00	2.0	89.382	26.40	4.37	2.18550
	11:56:00	3.0	90.704	25.08	5.69	1.89767
	11:57:00	4.0	91.912	23.87	6.90	1.72525
	11:58:00	5.0	92.976	22.80	7.97	1.59300
	11:59:00	6.0	93.983	21.80	8.97	1.49533
	12:00:00	7.0	94.874	20.91	9.86	1.40900
	12:01:00	8.0	95.694	20.09	10.68	1.33538
	12:02:00	9.0	96.427	19.35	11.42	1.26844
	12:03:00	10.0	97.089	18.69	12.08	1.20780
	12:04:00	11.0	97.664	18.12	12.65	1.15027
	12:05:00	12.0	98.211	17.57	13.20	1.10000
	12:06:00	13.0	98.685	17.10	13.67	1.05185
	12:07:00	14.0	99.131	16.65	14.12	1.00857
	12:08:00	15.0	99.519	16.26	14.51	0.96720
	12:09:00	16.0	99.879	15.90	14.87	0.92925
	12:10:00	17.0	100.195	15.59	15.18	0.89318
	12:11:00	18.0	100.483	15.30	15.47	0.85956
	12:12:00	19.0	100.756	15.02	15.75	0.82868
	12:13:00	20.0	100.972	14.81	15.96	0.79805
	12:18:00	25.0	101.835	13.95	16.82	0.67296
	12:23:00	30.0	102.324	13.46	17.31	0.57710
	12:28:00	35.0	102.612	13.17	17.60	0.50289

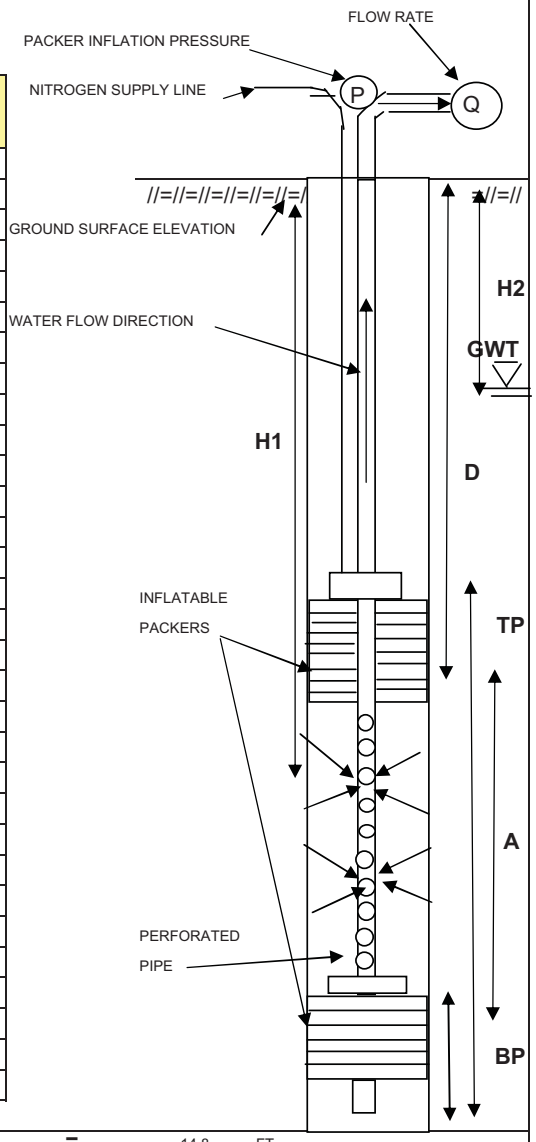

LEGEND:				
	A - TOTAL LENGTH OF TEST SECTION (FT)	=	14.8	FT
	TP - TOTAL LENGTH OF TOP PACKER AND ASSEMBLY	=	19.9	FT
	BP - TOTAL LENGTH OF BOTTOM PACKER AND ASSEMBLY	=	3.85	FT
	D - DISTANCE BETWEEN GROUND SURFACE AND TOP OF THE TEST ZONE	=	118.6	FT
	PIP - PACKER INFLATION PRESSURE (D PSI **+ 50 PSI**)	=	200	PSI
	H1- DISTANCE BETWEEN WATER PRESSURE GAUGE AND GROUND SURFACE	=	115.8	FT
	H2- DISTANCE BETWEEN GROUND SURFACE AND GROUND WATER TABLE	=	13.24	FT

GZA

BORING NO. /TEST NO. MW-67 T17

PACKER TEST LOG

GZA GEOENVIRONMENTAL OF NEW YORK 440 NINTH AVENUE, 18th FLOOR NEW YORK, NEW YORK 10001 SCIENTISTS AND ENGINEERS	Client Entergy Indian Point Energy Cente Buchanan, NY	BORING NO./TEST NO.	MW-67 T18A
		SHEET	1 of 1
		FILE NO.	41.0017869.01
		PROJECT LOCATION	Indian Point

CONTRACTOR	Aquifer Drilling & Testing, Inc.	BORING COORDINATES	N 463127.0611	E 604426.6654	
FOREMAN	Dave Carter	GROUND SURFACE EL.(FT)	14.356	DATUM	NGVD 29
GZA ENG.	Rick Ponti	FINAL BORING DEPTH (FT)	347.9	DATE START/END	8/21/07
DIAMETER OF DRILLED BOREHOLE	3.83 INCH	GROUND WATER DEPTH (STATIC WATER LEVEL DEPTH)	12.78	(below grade)	Casing is 0.15 ft above ground.
I.D. OF DRILLING RODS	2 INCH				

TESTED INTERVAL FROM / TO (FT)	TIME (HR:MIN)	ELAPSED TIME (Δt MIN)	DEPTH UNDER WATER (FT)	DEPTH TO WATER (FT)	CUMULATIVE RECOVERY (ΔH FT)	RECOVERY RATE (ΔH/Δt)
100.0-114.8	15:14:30	0.0	34.291	31.80	0.00	-
L= 14.8 ft	15:15:00	0.5	39.719	26.37	5.43	10.85600
	15:15:30	1.0	42.648	23.44	8.36	8.35700
	15:16:00	1.5	45.076	21.01	10.79	7.19000
	15:16:30	2.0	47.077	19.01	12.79	6.39300
	15:17:30	3.0	50.077	16.01	15.79	5.26200
	15:18:30	4.0	52.042	14.05	17.75	4.43775
	15:19:30	5.0	53.292	12.80	19.00	3.80020
	15:20:30	6.0	54.078	12.01	19.79	3.29783
	15:21:30	7.0	54.578	11.51	20.29	2.89814
	15:22:30	8.0	54.864	11.23	20.57	2.57163

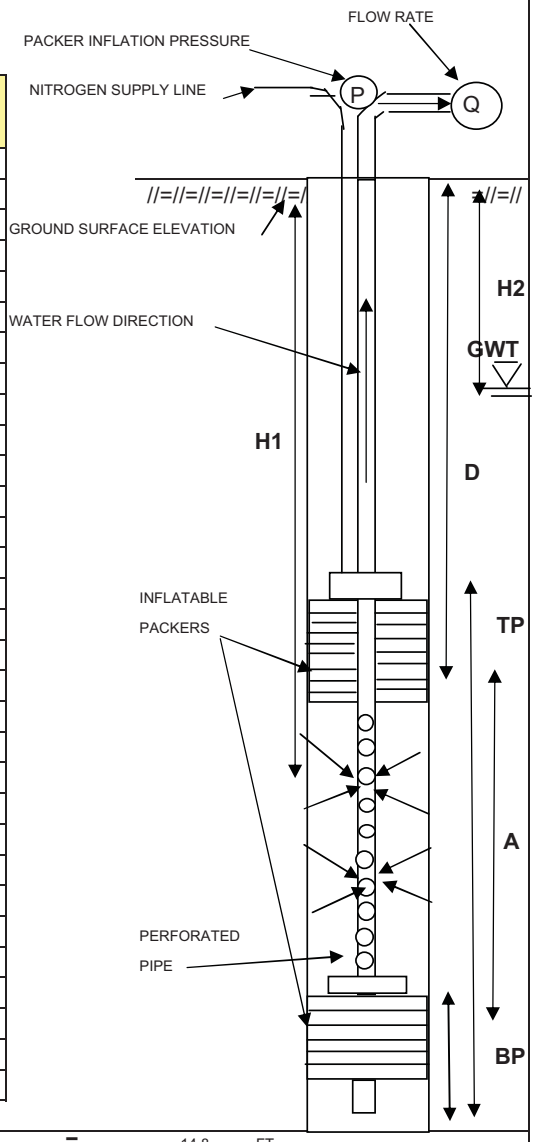

LEGEND:				
	A - TOTAL LENGTH OF TEST SECTION (FT)	=	14.8	FT
	TP - TOTAL LENGTH OF TOP PACKER AND ASSEMBLY	=	19.9	FT
	BP - TOTAL LENGTH OF BOTTOM PACKER AND ASSEMBLY	=	3.85	FT
	D - DISTANCE BETWEEN GROUND SURFACE AND TOP OF THE TEST ZONE	=	100.0	FT
	PIP - PACKER INFLATION PRESSURE (D PSI **+ 50 PSI**)	=	180	PSI
	H1- DISTANCE BETWEEN WATER PRESSURE GAUGE AND GROUND SURFACE	=	66.1	FT
	H2- DISTANCE BETWEEN GROUND SURFACE AND GROUND WATER TABLE	=	12.78	FT

GZA

BORING NO. /TEST NO. MW-67 T18A

PACKER TEST LOG

GZA GEOENVIRONMENTAL OF NEW YORK 440 NINTH AVENUE, 18th FLOOR NEW YORK, NEW YORK 10001 SCIENTISTS AND ENGINEERS	Client Entergy Indian Point Energy Cente Buchanan, NY	BORING NO./TEST NO. MW-67 T18A CH SHEET 1 of 1 FILE NO. 41.0017869.01 PROJECT LOCATION Indian Point

CONTRACTOR	Aquifer Drilling & Testing, Inc.	BORING COORDINATES	N 463127.0611 E 604426.6654
FOREMAN	Dave Carter	GROUND SURFACE EL.(FT)	14.356 DATUM NGVD 29
GZA ENG.	Rick Ponti	FINAL BORING DEPTH (FT)	347.9 DATE START/END 8/21/07
DIAMETER OF DRILLED BOREHOLE	3.83 INCH	GROUND WATER DEPTH (STATIC WATER LEVEL DEPTH)	12.78 (below grade) Casing is 0.15 ft above ground.
I.D. OF DRILLING RODS	2 INCH		

TESTED INTERVAL FROM / TO (FT)	TIME (HR:MIN:SEC)	ELAPSED TIME (Δt MIN)	DEPTH UNDER WATER (FT)	DEPTH TO WATER (FT)	DRAWDOWN (ΔH FT)	PUMPING RATE (gal/min)	SPECIFIC CAPACITY (gpm/ft)
100.0-114.8	15:35	0	44.469	21.62	8.841	0.900	0.102
L= 14.8 ft	15:36	1	44.469	21.62	8.841	0.900	0.102
	15:37	2	44.469	21.62	8.841	0.900	0.102
	15:38	3	44.469	21.62	8.841	0.900	0.102
	15:39	4	44.362	21.73	8.948	0.900	0.101
	15:40	5	44.362	21.73	8.948	0.900	0.101
	15:41	6	44.398	21.69	8.912	0.900	0.101
	15:42	7	44.398	21.69	8.912	0.900	0.101
	15:43	8	44.398	21.69	8.912	0.900	0.101
	15:44	9	44.433	21.66	8.877	0.900	0.101
	15:45	10	44.398	21.69	8.912	0.900	0.101
	15:46	11	44.326	21.76	8.984	0.900	0.100
	15:47	12	44.291	21.80	9.019	0.900	0.100
	15:48	13	44.291	21.80	9.019	0.900	0.100
	15:49	14	44.326	21.76	8.984	0.900	0.100
	15:50	15	44.326	21.76	8.984	0.900	0.100
	15:51	16	44.326	21.76	8.984	0.900	0.100
	15:52	17	44.362	21.73	8.948	0.900	0.101
	15:53	18	44.433	21.66	8.877	0.900	0.101
	15:54	19	44.469	21.62	8.841	0.900	0.102
	15:55	20	44.505	21.59	8.805	0.900	0.102

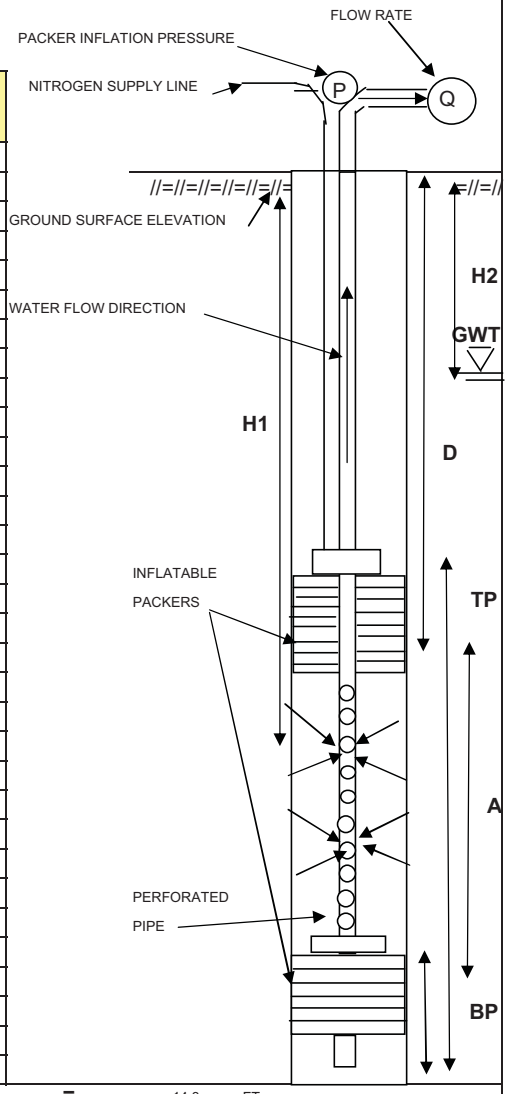

LEGEND:			
A - TOTAL LENGTH OF TEST SECTION (FT)	=	14.8	FT
TP - TOTAL LENGTH OF TOP PACKER AND ASSEMBLY	=	19.9	FT
BP - TOTAL LENGTH OF BOTTOM PACKER AND ASSEMBLY	=	3.85	FT
D - DISTANCE BETWEEN GROUND SURFACE AND TOP OF THE TEST ZONE	=	100.0	FT
PIP - PACKER INFLATION PRESSURE (D PSI + **50 PSI**)	=	180	PSI
H1- DISTANCE BETWEEN WATER PRESSURE GAUGE AND GROUND SURFACE	=	66.1	FT
H2- DISTANCE BETWEEN GROUND SURFACE AND GROUND WATER TABLE	=	12.78	FT

GZA

BORING NO. /TEST NO. MW-67 T18A CH

PACKER TEST LOG

GZA GEOENVIRONMENTAL OF NEW YORK 440 NINTH AVENUE, 18th FLOOR NEW YORK, NEW YORK 10001 SCIENTISTS AND ENGINEERS	Client Entergy Indian Point Energy Cente Buchanan, NY	BORING NO./TEST NO.	MW-67 T19
		SHEET	1 of 1
		FILE NO.	41.0017869.01
		PROJECT LOCATION	Indian Point

CONTRACTOR	Aquifer Drilling & Testing, Inc.	BORING COORDINATES	N 463127.0611	E 604426.6654	
FOREMAN	Dave Carter	GROUND SURFACE EL.(FT)	14.356	DATUM	NGVD 29
GZA ENG.	Rick Ponti	FINAL BORING DEPTH (FT)	347.9	DATE START/END	8/25/07
DIAMETER OF DRILLED BOREHOLE	3.83 INCH	GROUND WATER DEPTH (STATIC WATER LEVEL DEPTH)	13.46	(below grade)	Casing is 0.15 ft above ground.
I.D. OF DRILLING RODS	2 INCH				

TESTED INTERVAL FROM / TO (FT)	TIME (HR:MIN)	ELAPSED TIME (Δt MIN)	DEPTH UNDER WATER (FT)	DEPTH TO WATER (FT)	CUMULATIVE RECOVERY (ΔH FT)	RECOVERY RATE (ΔH/Δt)
85.6-100.4	15:34:00	0.0	3.92	25.60	0.00	-
L= 14.8 ft	15:34:30	0.5	6.762	22.76	2.84	5.68400
	15:35:00	1.0	7.867	21.65	3.95	3.94700
	15:35:30	1.5	8.855	20.67	4.94	3.29000
	15:36:00	2.0	9.747	19.77	5.83	2.91350
	15:37:00	3.0	11.248	18.27	7.33	2.44267
	15:38:00	4.0	12.436	17.08	8.52	2.12900
	15:39:00	5.0	13.378	16.14	9.46	1.89160
	15:40:00	6.0	14.123	15.40	10.20	1.70050
	15:41:00	7.0	14.703	14.82	10.78	1.54043
	15:42:00	8.0	15.154	14.37	11.23	1.40425
	15:43:00	9.0	15.504	14.02	11.58	1.28711
	15:44:00	10.0	15.773	13.75	11.85	1.18530
	15:45:00	11.0	15.973	13.55	12.05	1.09573
	15:46:00	12.0	16.13	13.39	12.21	1.01750
	15:47:00	13.0	16.245	13.28	12.33	0.94808
	15:48:00	14.0	16.332	13.19	12.41	0.88657
	15:49:00	15.0	16.396	13.12	12.48	0.83173

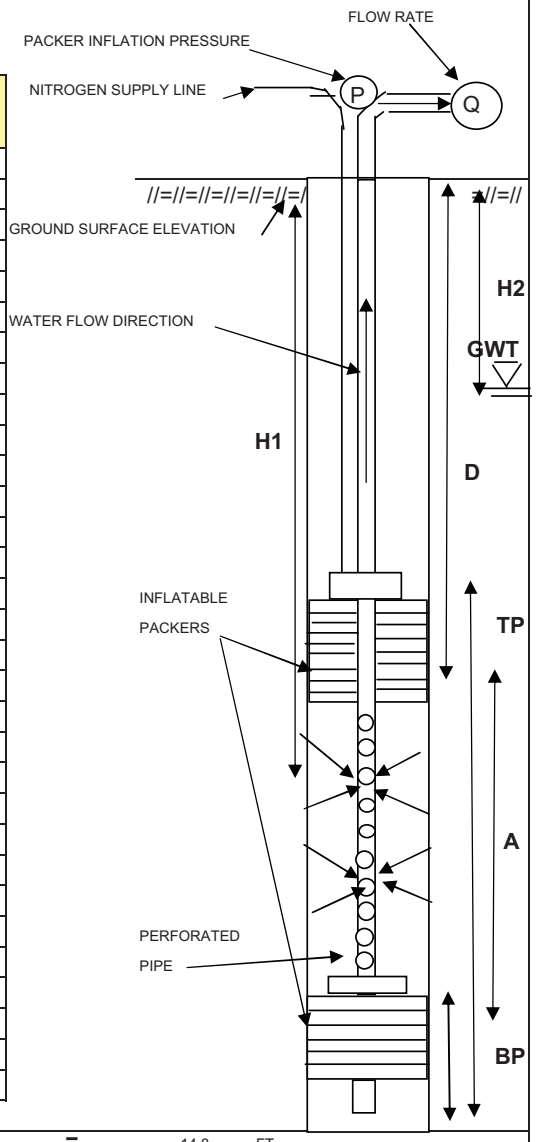

LEGEND:				
	A - TOTAL LENGTH OF TEST SECTION (FT)	=	14.8	FT
	TP - TOTAL LENGTH OF TOP PACKER AND ASSEMBLY	=	19.9	FT
	BP - TOTAL LENGTH OF BOTTOM PACKER AND ASSEMBLY	=	3.85	FT
	D - DISTANCE BETWEEN GROUND SURFACE AND TOP OF THE TEST ZONE	=	85.6	FT
	PIP - PACKER INFLATION PRESSURE (D PSI **+ 50 PSI**)	=	200	PSI
	H1- DISTANCE BETWEEN WATER PRESSURE GAUGE AND GROUND SURFACE	=	29.5	FT
	H2- DISTANCE BETWEEN GROUND SURFACE AND GROUND WATER TABLE	=	13.46	FT

GZA

BORING NO. /TEST NO. MW-67 T19

PACKER TEST LOG

GZA GEOENVIRONMENTAL OF NEW YORK 440 NINTH AVENUE, 18th FLOOR NEW YORK, NEW YORK 10001 SCIENTISTS AND ENGINEERS	Client Entergy Indian Point Energy Cente Buchanan, NY	BORING NO./TEST NO.	MW-67 T20A
		SHEET	1 of 1
		FILE NO.	41.0017869.01
		PROJECT LOCATION	Indian Point

CONTRACTOR	Aquifer Drilling & Testing, Inc.	BORING COORDINATES	N 463127.0611	E 604426.6654	
FOREMAN	Dave Carter	GROUND SURFACE EL.(FT)	14.356	DATUM	NGVD 29
GZA ENG.	Rick Ponti	FINAL BORING DEPTH (FT)	347.9	DATE START/END	8/22/07
DIAMETER OF DRILLED BOREHOLE	3.83 INCH	GROUND WATER DEPTH (STATIC WATER LEVEL DEPTH)	12.75	(below grade)	Casing is 0.15 ft above ground.
I.D. OF DRILLING RODS	2 INCH				

TESTED INTERVAL FROM / TO (FT)	TIME (HR:MIN)	ELAPSED TIME (Δt MIN)	DEPTH UNDER WATER (FT)	DEPTH TO WATER (FT)	CUMULATIVE RECOVERY (ΔH FT)	RECOVERY RATE (ΔH/Δt)
72.0-86.8	8:27:00	0.0	0.535	37.82	0.00	-
L= 14.8 ft	8:27:30	0.5	2.634	35.72	2.10	4.19800
	8:28:00	1.0	2.955	35.40	2.42	2.42000
	8:29:00	2.0	3.524	34.83	2.99	1.49450
	8:30:00	3.0	4.057	34.29	3.52	1.17400
	8:31:00	4.0	4.627	33.72	4.09	1.02300
	8:32:00	5.0	5.16	33.19	4.63	0.92500
	8:33:00	6.0	5.623	32.73	5.09	0.84800
	8:34:00	7.0	6.157	32.19	5.62	0.80314
	8:35:00	8.0	6.655	31.70	6.12	0.76500
	8:36:00	9.0	7.117	31.23	6.58	0.73133
	8:37:00	10.0	7.58	30.77	7.05	0.70450
	8:38:00	11.0	8.042	30.31	7.51	0.68245
	8:39:00	12.0	8.469	29.88	7.93	0.66117
	8:40:00	13.0	8.896	29.45	8.36	0.64315
	8:41:00	14.0	9.323	29.03	8.79	0.62771
	8:42:00	15.0	9.786	28.56	9.25	0.61673
	8:43:00	16.0	10.142	28.21	9.61	0.60044
	8:44:00	17.0	10.533	27.82	10.00	0.58812
	8:45:00	18.0	10.925	27.43	10.39	0.57722
	8:46:00	19.0	11.28	27.07	10.75	0.56553
	8:47:00	20.0	11.636	26.71	11.10	0.55505
	8:52:00	25.0	13.344	25.01	12.81	0.51236
	8:57:00	30.0	14.839	23.51	14.30	0.47680
	9:02:00	35.0	16.12	22.23	15.59	0.44529
	9:07:00	40.0	17.295	21.06	16.76	0.41900
	9:12:00	45.0	18.327	20.02	17.79	0.39538
	9:17:00	50.0	19.252	19.10	18.72	0.37434
	9:22:00	55.0	20.035	18.32	19.50	0.35455
	9:27:00	60.0	20.747	17.60	20.21	0.33687
	9:37:00	70.0	21.922	16.43	21.39	0.30553

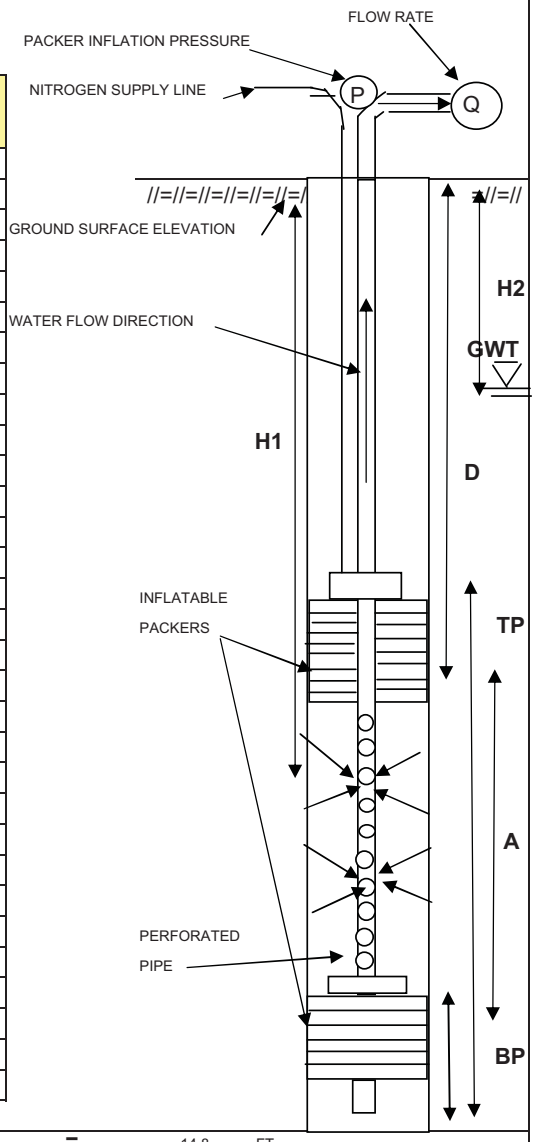

LEGEND:				
	A - TOTAL LENGTH OF TEST SECTION (FT)	=	14.8	FT
	TP - TOTAL LENGTH OF TOP PACKER AND ASSEMBLY	=	19.9	FT
	BP - TOTAL LENGTH OF BOTTOM PACKER AND ASSEMBLY	=	3.85	FT
	D - DISTANCE BETWEEN GROUND SURFACE AND TOP OF THE TEST ZONE	=	72.0	FT
	PIP - PACKER INFLATION PRESSURE (D PSI **+ 50 PSI**)	=	180	PSI
	H1- DISTANCE BETWEEN WATER PRESSURE GAUGE AND GROUND SURFACE	=	38.4	FT
	H2- DISTANCE BETWEEN GROUND SURFACE AND GROUND WATER TABLE	=	12.75	FT

GZA

BORING NO. /TEST NO. MW-67 T20A

PACKER TEST LOG

GZA GEOENVIRONMENTAL OF NEW YORK 440 NINTH AVENUE, 18th FLOOR NEW YORK, NEW YORK 10001 SCIENTISTS AND ENGINEERS	Client Entergy Indian Point Energy Cente Buchanan, NY	BORING NO./TEST NO.	MW-67 T21A
		SHEET	1 of 1
		FILE NO.	41.0017869.01
		PROJECT LOCATION	Indian Point

CONTRACTOR	Aquifer Drilling & Testing, Inc.	BORING COORDINATES	N 463127.0611	E 604426.6654	
FOREMAN	Dave Carter	GROUND SURFACE EL.(FT)	14.356	DATUM	NGVD 29
GZA ENG.	Rick Ponti	FINAL BORING DEPTH (FT)	347.9	DATE START/END	8/22/07
DIAMETER OF DRILLED BOREHOLE	3.83 INCH	GROUND WATER DEPTH (STATIC WATER LEVEL DEPTH)	13.23	(below grade)	Casing is 0.15 ft above ground.
I.D. OF DRILLING RODS	2 INCH				

TESTED INTERVAL FROM / TO (FT)	TIME (HR:MIN)	ELAPSED TIME (Δt MIN)	DEPTH UNDER WATER (FT)	DEPTH TO WATER (FT)	CUMULATIVE RECOVERY (ΔH FT)	RECOVERY RATE (ΔH/Δt)
56.0-70.8	12:14:00	0.0	16.725	35.12	0.00	-
L= 14.8 ft	12:14:30	0.5	18.968	32.69	2.42	4.84200
	12:15:00	1.0	19.146	32.52	2.60	2.59800
	12:16:00	2.0	19.323	32.30	2.81	1.40600
	12:17:00	3.0	19.537	32.05	3.06	1.02033
	12:18:00	4.0	19.786	32.05	3.06	0.76525
	12:19:00	5.0	19.964	31.88	3.24	0.64780
	12:20:00	6.0	20.178	31.66	3.45	0.57550
	12:21:00	7.0	20.391	31.45	3.67	0.52371
	12:22:00	8.0	20.605	31.24	3.88	0.48500
	12:23:00	9.0	20.783	31.06	4.06	0.45089
	12:24:00	10.0	20.996	30.84	4.27	0.42710
	12:29:00	15.0	21.957	29.88	5.23	0.34880
	12:34:00	20.0	22.847	28.99	6.12	0.30610
	12:39:00	25.0	23.737	28.10	7.01	0.28048
	12:44:00	30.0	24.52	27.32	7.80	0.25983
	12:49:00	35.0	25.303	26.54	8.58	0.24509
	12:54:00	40.0	25.98	25.86	9.26	0.23138
	12:59:00	45.0	26.692	25.15	9.97	0.22149
	13:04:00	50.0	27.333	24.51	10.61	0.21216
	13:09:00	55.0	27.938	23.90	11.21	0.20387
	13:14:00	60.0	28.507	23.33	11.78	0.19637
	13:19:00	65.0	29.077	22.76	12.35	0.19003
	13:24:00	70.0	29.575	22.27	12.85	0.18357
	13:29:00	75.0	30.11	21.73	13.39	0.17847
	13:34:00	80.0	30.537	21.30	13.81	0.17265
	13:39:00	85.0	31	20.84	14.28	0.16794
	13:44:00	90.0	31.462	20.38	14.74	0.16374

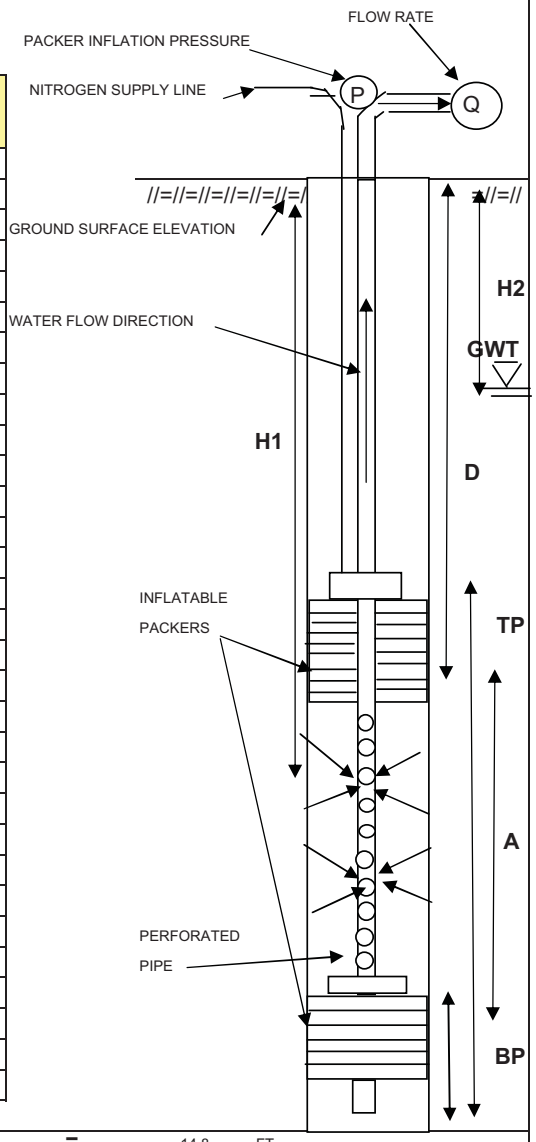

LEGEND:				
	A - TOTAL LENGTH OF TEST SECTION (FT)	=	14.8	FT
	TP - TOTAL LENGTH OF TOP PACKER AND ASSEMBLY	=	19.9	FT
	BP - TOTAL LENGTH OF BOTTOM PACKER AND ASSEMBLY	=	3.85	FT
	D - DISTANCE BETWEEN GROUND SURFACE AND TOP OF THE TEST ZONE	=	56.0	FT
	PIP - PACKER INFLATION PRESSURE (D PSI **+ 50 PSI**)	=	180	PSI
	H1- DISTANCE BETWEEN WATER PRESSURE GAUGE AND GROUND SURFACE	=	51.8	FT
	H2- DISTANCE BETWEEN GROUND SURFACE AND GROUND WATER TABLE	=	13.23	FT

GZA

BORING NO. /TEST NO. MW-67 T21A

PACKER TEST LOG

GZA GEOENVIRONMENTAL OF NEW YORK 440 NINTH AVENUE, 18th FLOOR NEW YORK, NEW YORK 10001 SCIENTISTS AND ENGINEERS	Client Entergy Indian Point Energy Cente Buchanan, NY	BORING NO./TEST NO.	MW-67 T22A
		SHEET	1 of 1
		FILE NO.	41.0017869.01
		PROJECT LOCATION	Indian Point

CONTRACTOR	Aquifer Drilling & Testing, Inc.	BORING COORDINATES	N 463127.0611	E 604426.6654	
FOREMAN	Dave Carter	GROUND SURFACE EL.(FT)	14.356	DATUM	NGVD 29
GZA ENG.	Rick Ponti	FINAL BORING DEPTH (FT)	347.9	DATE START/END	8/22/07
DIAMETER OF DRILLED BOREHOLE	3.83 INCH	GROUND WATER DEPTH (STATIC WATER LEVEL DEPTH)	13.36	(below grade)	Casing is 0.15 ft above ground.
I.D. OF DRILLING RODS	2 INCH				

TESTED INTERVAL FROM / TO (FT)	TIME (HR:MIN)	ELAPSED TIME (Δt MIN)	DEPTH UNDER WATER (FT)	DEPTH TO WATER (FT)	CUMULATIVE RECOVERY (ΔH FT)	RECOVERY RATE (ΔH/Δt)
46.5-61.3	14:23:00	0.0	12.49	29.99	0.00	-
L= 14.8 ft	14:23:30	0.5	14.483	28.00	1.99	3.98600
	14:24:00	1.0	14.661	27.82	2.17	2.17100
	14:25:00	2.0	14.981	27.50	2.49	1.24550
	14:26:00	3.0	15.231	27.25	2.74	0.91367
	14:27:00	4.0	15.586	26.89	3.10	0.77400
	14:28:00	5.0	15.836	26.64	3.35	0.66920
	14:29:00	6.0	16.12	26.36	3.63	0.60500
	14:30:00	7.0	16.405	26.08	3.92	0.55929
	14:31:00	8.0	16.69	25.79	4.20	0.52500
	14:32:00	9.0	16.939	25.54	4.45	0.49433
	14:33:00	10.0	17.188	25.29	4.70	0.46980
	14:34:00	11.0	17.437	25.04	4.95	0.44973
	14:35:00	12.0	17.686	24.79	5.20	0.43300
	14:36:00	13.0	17.935	24.55	5.45	0.41885
	14:37:00	14.0	18.185	24.30	5.70	0.40679
	14:38:00	15.0	18.434	24.05	5.94	0.39627
	14:39:00	16.0	18.647	23.83	6.16	0.38481
	14:40:00	17.0	18.861	23.62	6.37	0.37476
	14:41:00	18.0	19.11	23.37	6.62	0.36778
	14:42:00	19.0	19.323	23.16	6.83	0.35963
	14:43:00	20.0	19.501	22.98	7.01	0.35055
	14:48:00	25.0	20.534	21.95	8.04	0.32176
	14:53:00	30.0	21.459	21.02	8.97	0.29897
	14:58:00	35.0	22.313	20.17	9.82	0.28066
	15:03:00	40.0	23.061	19.42	10.57	0.26428
	15:08:00	45.0	23.773	18.71	11.28	0.25073
	15:13:00	50.0	24.378	18.10	11.89	0.23776
	15:18:00	55.0	24.947	17.53	12.46	0.22649
	15:23:00	60.0	25.481	17.00	12.99	0.21652
	15:28:00	65.0	25.944	16.54	13.45	0.20698

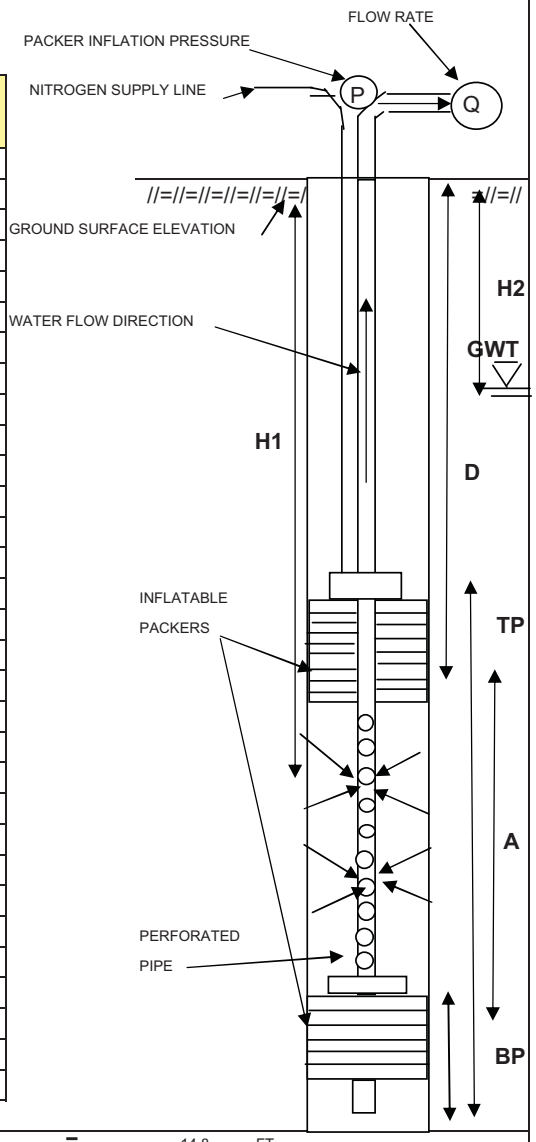

LEGEND:				
	A - TOTAL LENGTH OF TEST SECTION (FT)	=	14.8	FT
	TP - TOTAL LENGTH OF TOP PACKER AND ASSEMBLY	=	19.9	FT
	BP - TOTAL LENGTH OF BOTTOM PACKER AND ASSEMBLY	=	3.85	FT
	D - DISTANCE BETWEEN GROUND SURFACE AND TOP OF THE TEST ZONE	=	46.5	FT
	PIP - PACKER INFLATION PRESSURE (D PSI **+ 50 PSI**)	=	180	PSI
	H1- DISTANCE BETWEEN WATER PRESSURE GAUGE AND GROUND SURFACE	=	42.5	FT
	H2- DISTANCE BETWEEN GROUND SURFACE AND GROUND WATER TABLE	=	13.36	FT

GZA

BORING NO. /TEST NO. MW-67 T22A

PACKER TEST LOG

GZA GEOENVIRONMENTAL OF NEW YORK 440 NINTH AVENUE, 18th FLOOR NEW YORK, NEW YORK 10001 SCIENTISTS AND ENGINEERS	Client Entergy Indian Point Energy Cente Buchanan, NY	BORING NO./TEST NO.	MW-67 T23
		SHEET	1 of 1
		FILE NO.	41.0017869.01
		PROJECT LOCATION	Indian Point

CONTRACTOR	Aquifer Drilling & Testing, Inc.	BORING COORDINATES	N 463127.0611	E 604426.6654	
FOREMAN	Dave Carter	GROUND SURFACE EL.(FT)	14.356	DATUM	NGVD 29
GZA ENG.	Rick Ponti	FINAL BORING DEPTH (FT)	347.9	DATE START/END	8/25/07
DIAMETER OF DRILLED BOREHOLE	3.83 INCH	GROUND WATER DEPTH (STATIC WATER LEVEL DEPTH)	13.56	(below grade)	Casing is 0.15 ft above ground.
I.D. OF DRILLING RODS	2 INCH				

TESTED INTERVAL FROM / TO (FT)	TIME (HR:MIN)	ELAPSED TIME (Δt MIN)	DEPTH UNDER WATER (FT)	DEPTH TO WATER (FT)	CUMULATIVE RECOVERY (ΔH FT)	RECOVERY RATE (ΔH/Δt)
39.6-54.4	16:34:00	0.0	4.368	29.88	0.00	-
L= 14.8 ft	16:34:30	0.5	9.001	25.25	4.63	9.26600
	16:35:00	1.0	11.292	22.96	6.92	6.92400
	16:36:00	2.0	14.8	19.45	10.43	5.21600
	16:37:00	3.0	17.205	17.05	12.84	4.27900
	16:38:00	4.0	18.757	15.49	14.39	3.59725
	16:39:00	5.0	19.7	14.55	15.33	3.06640
	16:40:00	6.0	20.224	14.03	15.86	2.64267
	16:41:00	7.0	20.491	13.76	16.12	2.30329
	16:42:00	8.0	20.589	13.66	16.22	2.02763

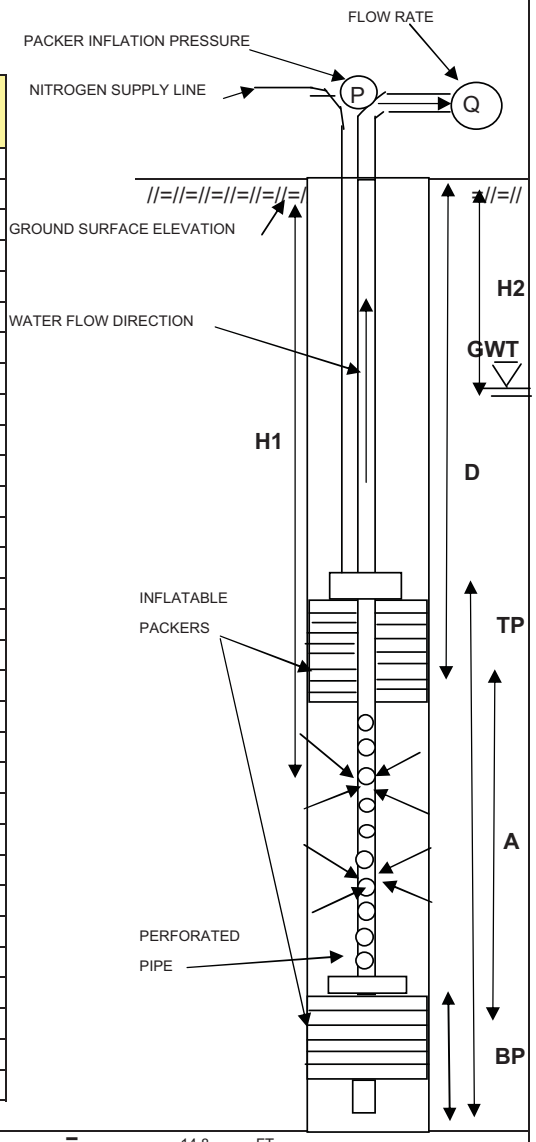

LEGEND:				
	A - TOTAL LENGTH OF TEST SECTION (FT)	=	14.8	FT
	TP - TOTAL LENGTH OF TOP PACKER AND ASSEMBLY	=	19.9	FT
	BP - TOTAL LENGTH OF BOTTOM PACKER AND ASSEMBLY	=	3.85	FT
	D - DISTANCE BETWEEN GROUND SURFACE AND TOP OF THE TEST ZONE	=	39.6	FT
	PIP - PACKER INFLATION PRESSURE (D PSI **+ 50 PSI**)	=	200	PSI
	H1- DISTANCE BETWEEN WATER PRESSURE GAUGE AND GROUND SURFACE	=	34.3	FT
	H2- DISTANCE BETWEEN GROUND SURFACE AND GROUND WATER TABLE	=	13.56	FT

GZA

BORING NO. /TEST NO. MW-67 T23

PACKER TEST LOG

GZA GEOENVIRONMENTAL OF NEW YORK 440 NINTH AVENUE, 18th FLOOR NEW YORK, NEW YORK 10001 SCIENTISTS AND ENGINEERS	Client Entergy Indian Point Energy Cente Buchanan, NY	BORING NO./TEST NO. SHEET FILE NO. PROJECT LOCATION	MW-67 T24 1 of 1 41.0017869.01 Indian Point

CONTRACTOR	Aquifer Drilling & Testing, Inc.	BORING COORDINATES	N 463127.0611	E 604426.6654	
FOREMAN	Dave Carter	GROUND SURFACE EL.(FT)	14.356	DATUM	NGVD 29
GZA ENG.	Rick Ponti	FINAL BORING DEPTH (FT)	347.9	DATE START/END	8/25/07
DIAMETER OF DRILLED BOREHOLE	3.83 INCH	GROUND WATER DEPTH (STATIC WATER LEVEL DEPTH)	13.61	(below grade)	Casing is 0.15 ft above ground.
I.D. OF DRILLING RODS	2 INCH				

TESTED INTERVAL FROM / TO (FT)	TIME (HR:MIN)	ELAPSED TIME (Δt MIN)	DEPTH UNDER WATER (FT)	DEPTH TO WATER (FT)	CUMULATIVE RECOVERY (ΔH FT)	RECOVERY RATE (ΔH/Δt)
32.1-46.9	17:10:00	0.0	1.047	28.58	0.00	-
L= 14.8 ft	17:10:30	0.5	5.001	24.63	3.95	7.90800
	17:11:00	1.0	7.477	22.15	6.43	6.43000
	17:11:30	1.5	9.489	20.14	8.44	5.62800
	17:12:00	2.0	11.098	18.53	10.05	5.02550
	17:13:00	3.0	13.373	16.26	12.33	4.10867
	17:14:00	4.0	14.696	14.93	13.65	3.41225
	17:15:00	5.0	15.397	14.23	14.35	2.87000
	17:16:00	6.0	15.748	13.88	14.70	2.45017
	17:17:00	7.0	15.901	13.73	14.85	2.12200

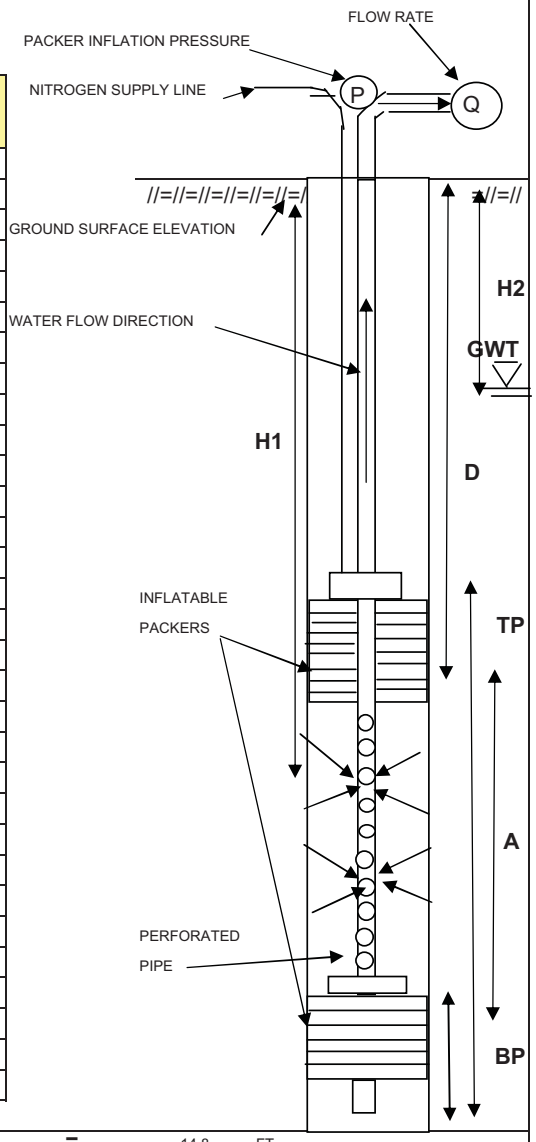

LEGEND:				
	A - TOTAL LENGTH OF TEST SECTION (FT)	=	14.8	FT
	TP - TOTAL LENGTH OF TOP PACKER AND ASSEMBLY	=	19.9	FT
	BP - TOTAL LENGTH OF BOTTOM PACKER AND ASSEMBLY	=	3.85	FT
	D - DISTANCE BETWEEN GROUND SURFACE AND TOP OF THE TEST ZONE	=	32.1	FT
	PIP - PACKER INFLATION PRESSURE (D PSI **+ 50 PSI**)	=	200	PSI
	H1- DISTANCE BETWEEN WATER PRESSURE GAUGE AND GROUND SURFACE	=	29.6	FT
	H2- DISTANCE BETWEEN GROUND SURFACE AND GROUND WATER TABLE	=	13.61	FT

GZA

BORING NO. /TEST NO. MW-67 T24